Speaker Crossover

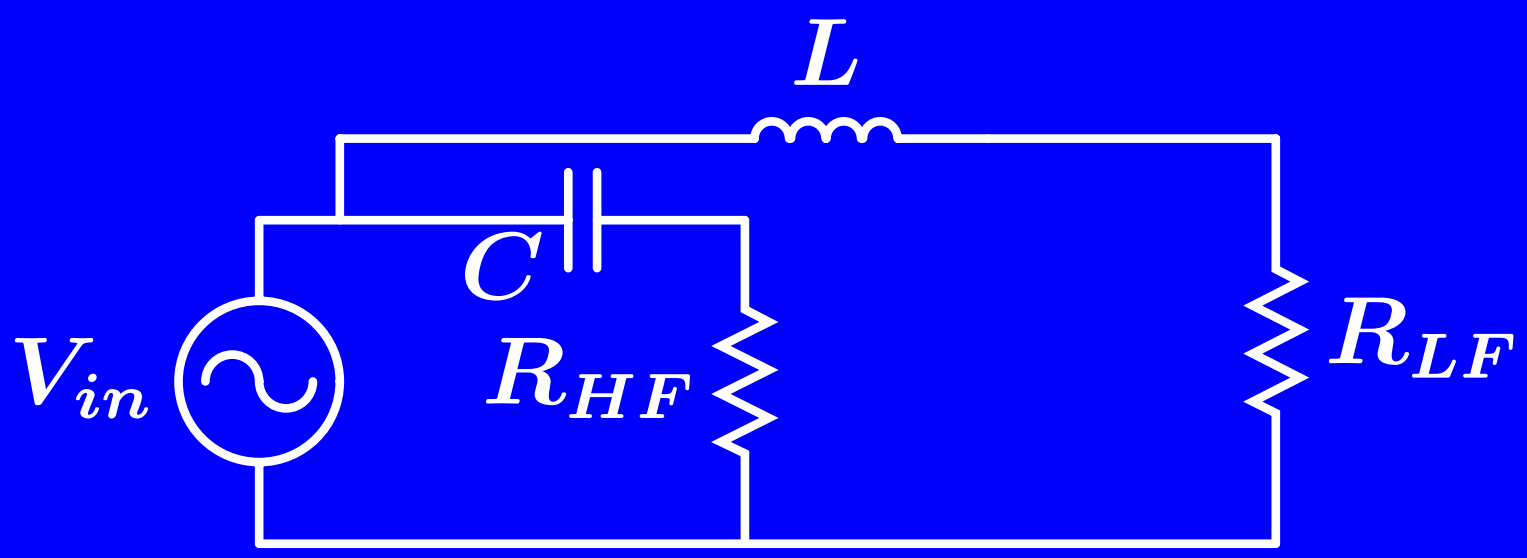

$$\omega_{-3}(HF) = 1/(R_{HF}C)$$

$$\omega_{-3}(LF) = R_{LF}/L$$

$$\omega_{-3}(LF) = \omega_{-3}(HF)$$

Bode Plot: Speaker Crossover

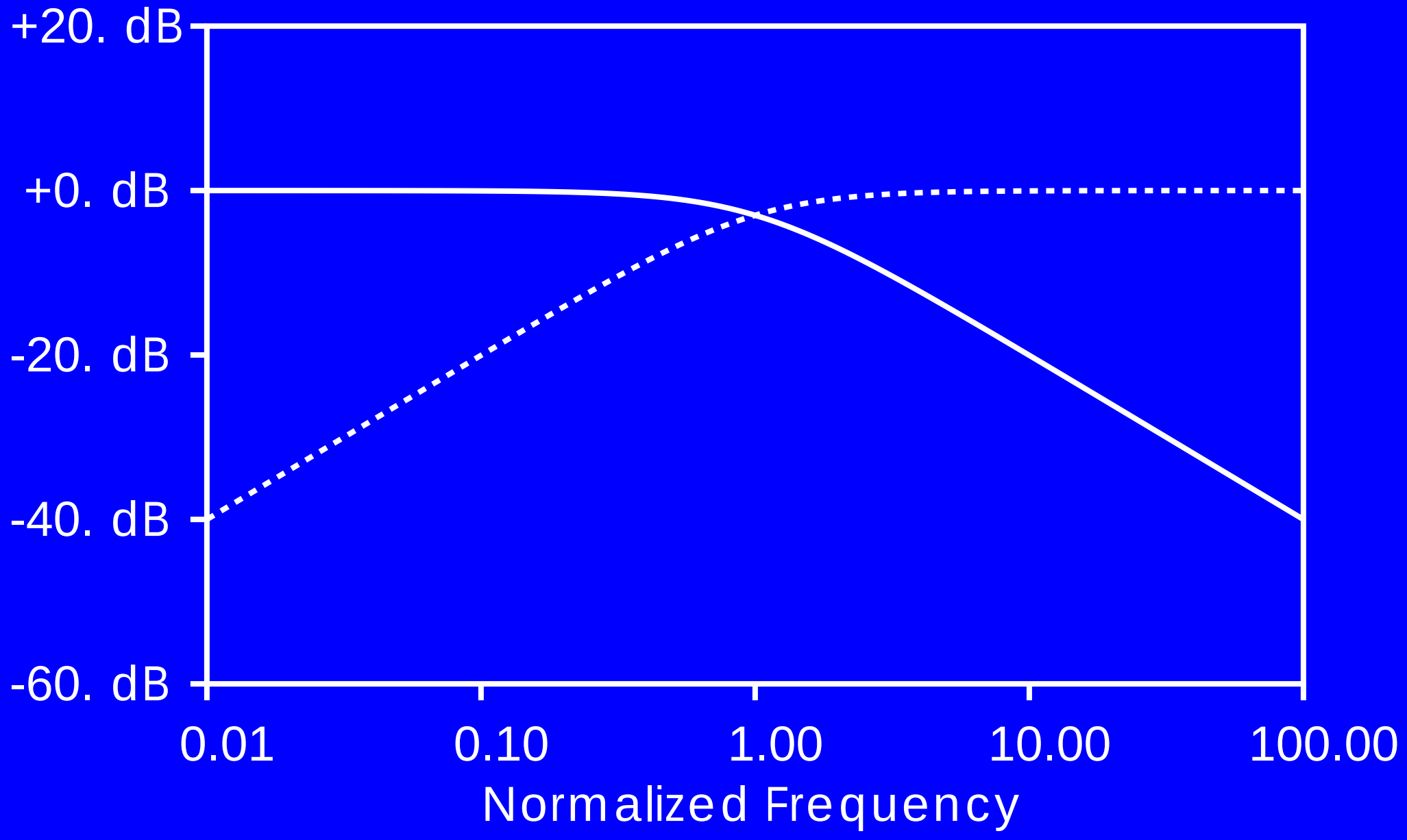

Parallel L-C Circuit II

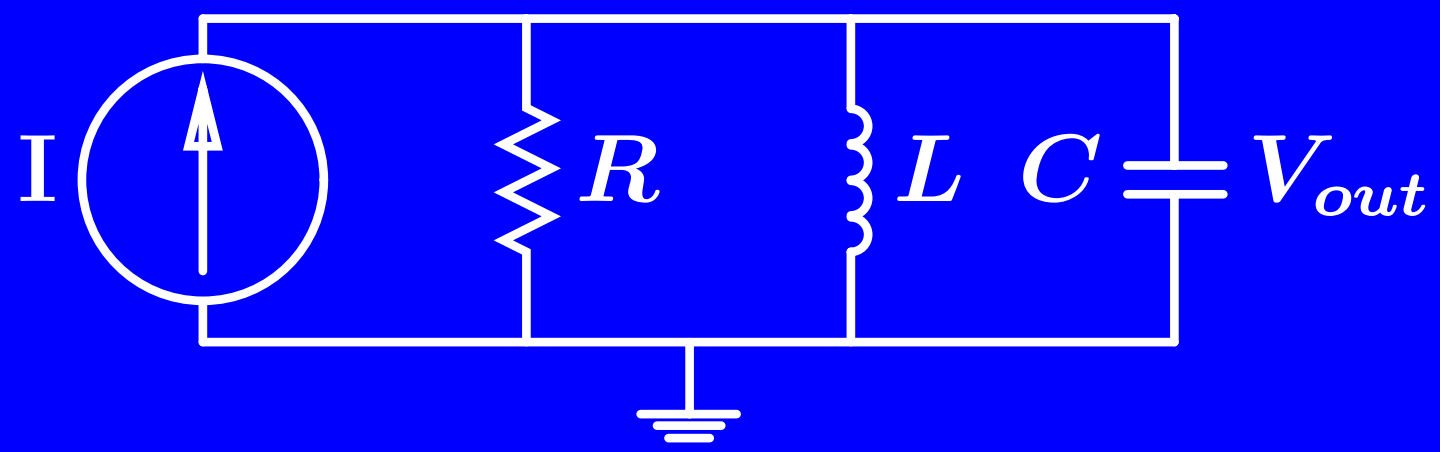

$$V_{out} = \mathrm{I}\,\mathrm{Z} = \mathrm{I}\frac{j\omega L}{(1-\omega^2 LC) + j\omega L/R}$$

$$\omega_0^2 = \frac{1}{LC}$$

$$Q = R/(\omega_0 L)$$

Bode Plot: LRC Circuit:Q=50

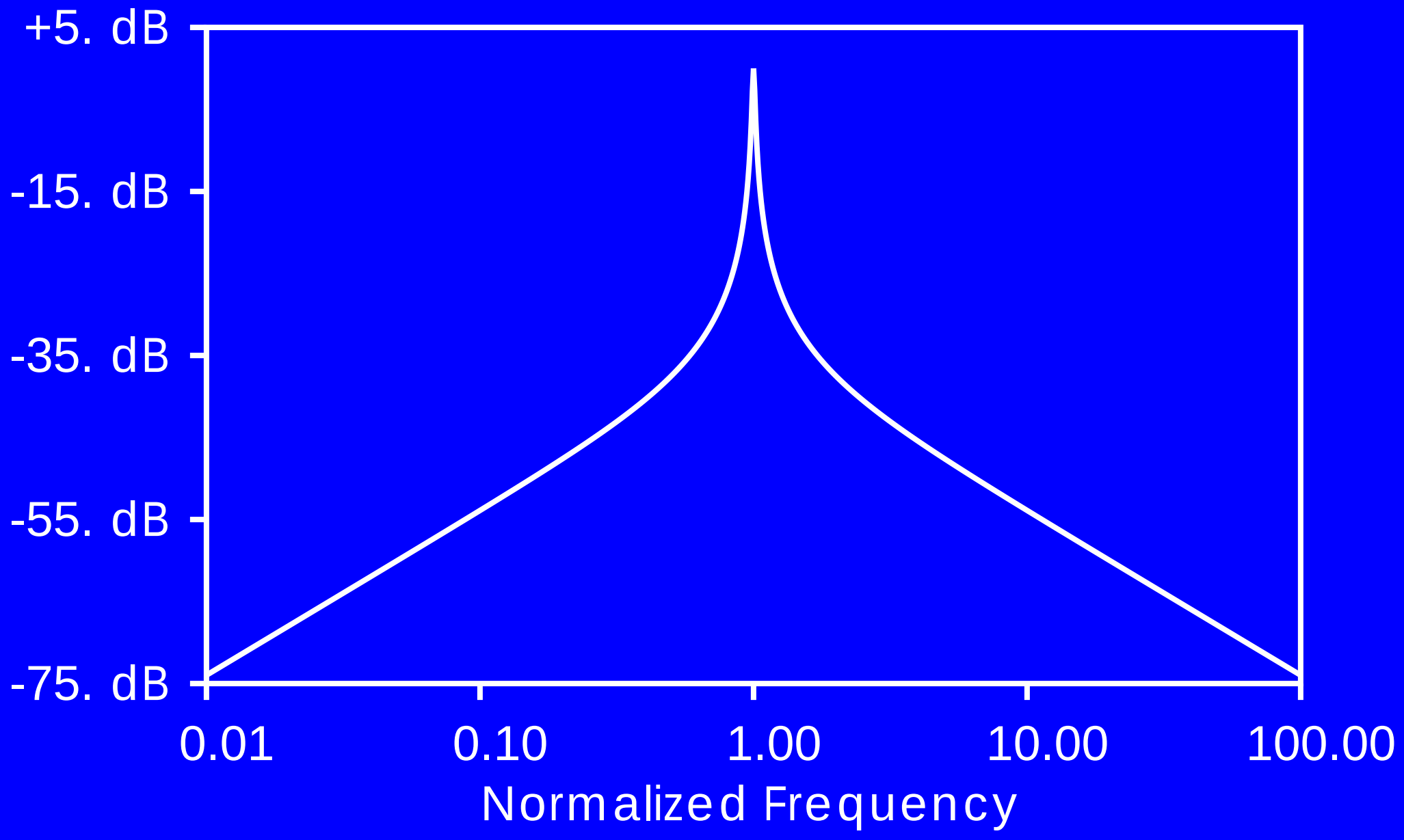

Bode Plot:Q=50 (Close-up)

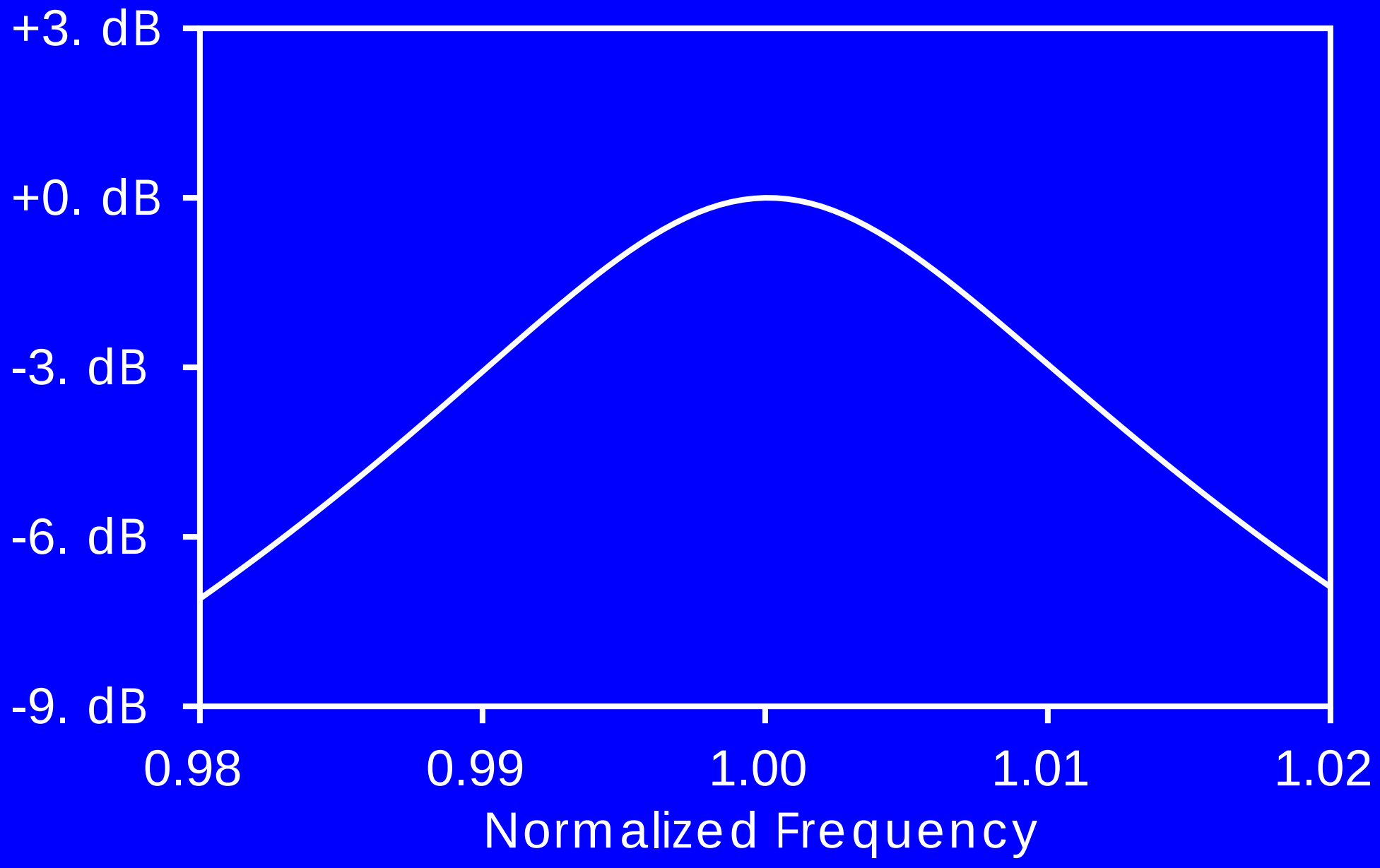

Bandwidth and Q

$$V(\omega_{-3}) = V(\omega_0)/\sqrt{2}$$

$$V(\omega_{+3}) = V(\omega_0)/\sqrt{2}$$

$$BW = \omega_{+3} - \omega_{-3}$$

$$Q = \omega_0/BW$$

Q for Parallel Circuit 2

$$Z = \frac{j\omega L}{(1-\omega^2 LC) + j\omega L/R}$$

$$Z(\omega_0) = R$$

$$Z(\omega_{\pm 3}) = R/\sqrt{2} \rightarrow (1-\omega^2 LC) \approx \omega L/R$$

$$(\omega_0 \pm \delta\omega)^2 \approx \omega_0^2 \pm 2\omega_0 \delta\omega$$

$$2LC\omega_0 \delta\omega \approx \omega_0 L/R$$

Q for Parallel Circuit 2 Contd.

$$\delta\omega/\omega_0 = (1/2)\omega_0 L/R$$

$$BW = (\omega_0 + \delta\omega) - (\omega_0 - \delta\omega)$$

$$BW = 2\delta\omega$$

$$Q = \omega_0/BW = R/(\omega_0 L)$$

Parallel L-C Circuit I

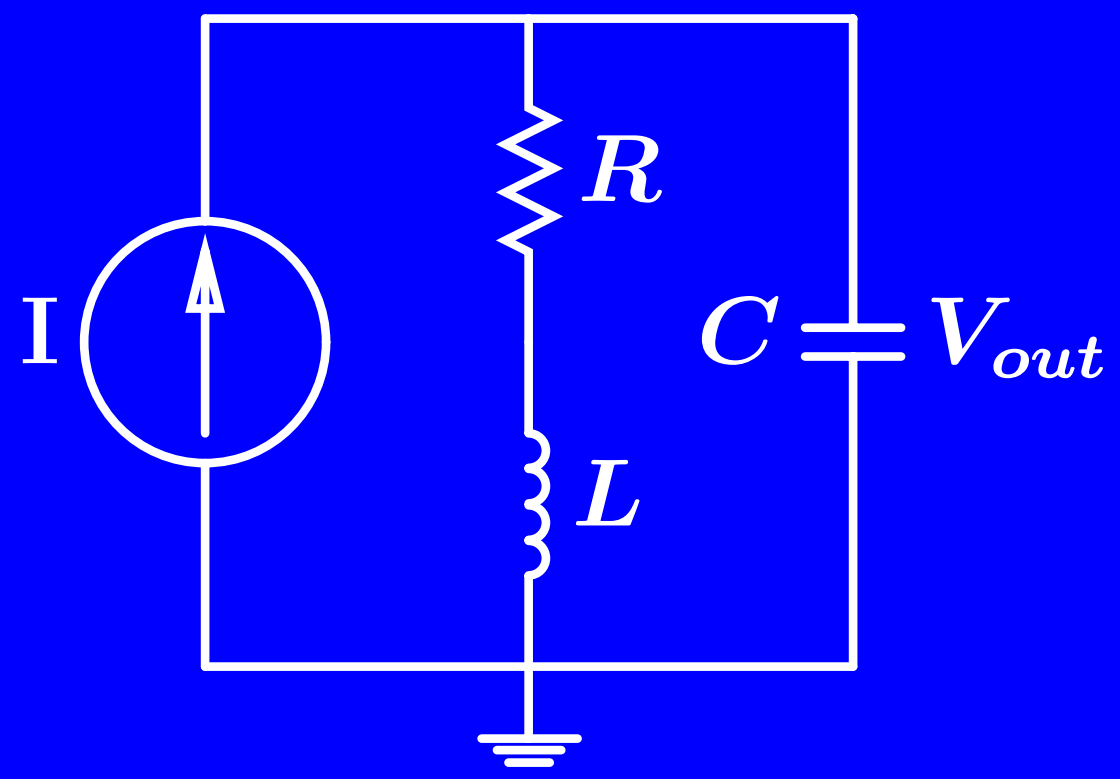

$$V_{out} = \mathrm{I}\,\mathrm{Z} = \mathrm{I}\frac{R + j\omega L}{(1 - \omega^2 LC) + j\omega RC}$$

$$Q = 1/(\omega_0 RC) = \omega_0 L/R$$

Q Equations Transform Circuit

$$Q(seriesR) = \omega_0 L / R_{series}$$

$$Q(\| R) = R_{\|} / (\omega_0 L)$$

$$R_{\|}(equiv) = R_{series} \times Q^2$$

$$R_{series}(equiv) = R_{\|} / Q^2$$