EECS 100
First Midterm Examination
Spring Semester 2003
Solutions

1. a.

Kirchoff's Current Law at X:

$$\frac{4 - V_x}{4} + \frac{(-2) - V_x}{12} + \frac{V_y - V_x}{2} = 0$$

Kirchoff's Current Law at Y:

$$\frac{V_x - V_y}{2} - \frac{V_y}{5} - 1 + \frac{(-15 - V_y}{20} + 7 = 0$$

1. b.

Matrix Equation:

$$\begin{pmatrix} -5/6 & 1/2 \\ 1/2 & -3/4 \end{pmatrix} \begin{pmatrix} V_X \\ V_Y \end{pmatrix} = \begin{pmatrix} -5/6 \\ -25/4 \end{pmatrix}$$

Solve by Cramer's Rule:

$$\begin{aligned} \Delta &= (-5/6)(-3/4) - (1/2)(1/2) = 3/8 \\ V_X &= \tfrac{1}{\Delta} \det \begin{pmatrix} 5/6 & 1/2 \\ -25/4 & -3/4 \end{pmatrix} = 10 \\ V_Y &= \tfrac{1}{\Delta} \det \begin{pmatrix} -5/6 & -5/6 \\ 1/2 & -25/4 \end{pmatrix} = 15 \end{aligned}$$

$$\boxed{V_x = +10\text{V}, V_y = +15\text{V}}$$

1. c.

Transformations: (Box X):

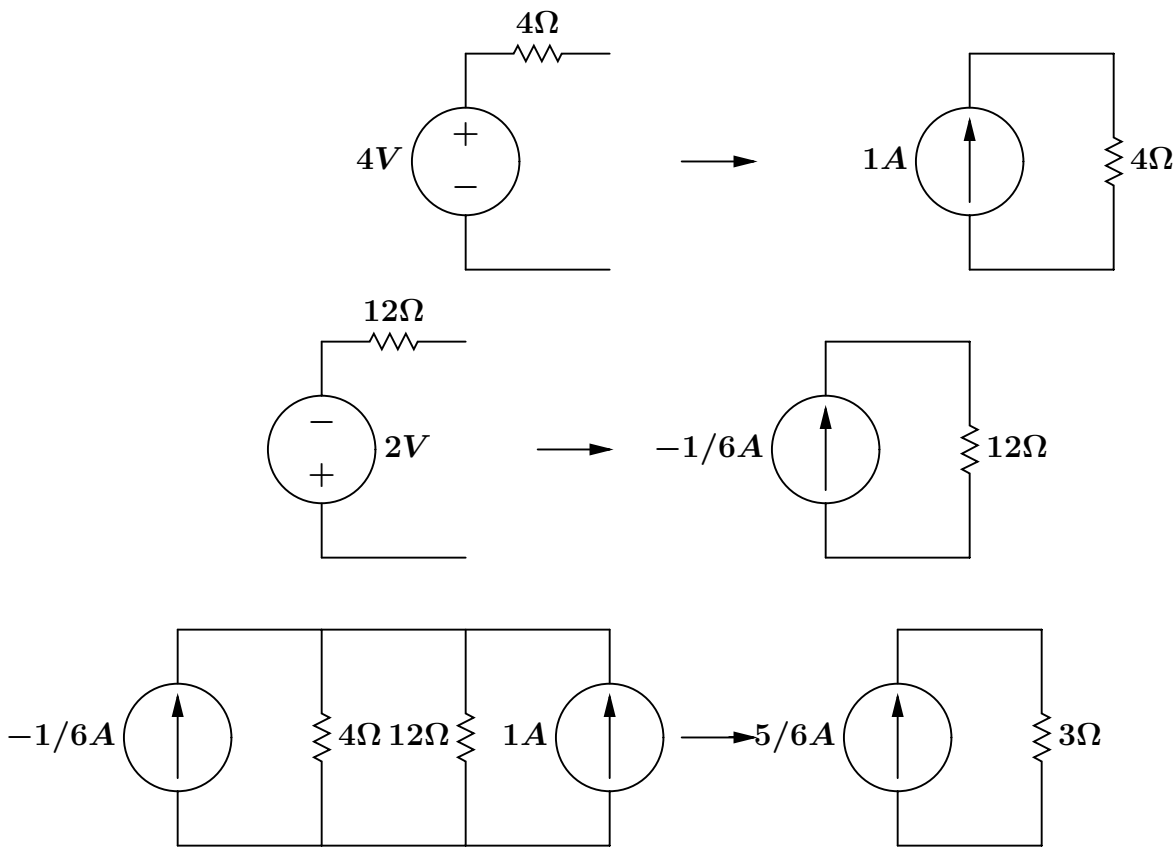

Thevenin Equivalent: (Box X):

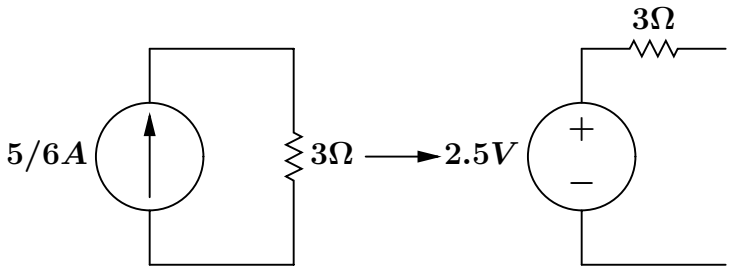

Transformations: (Box Y):

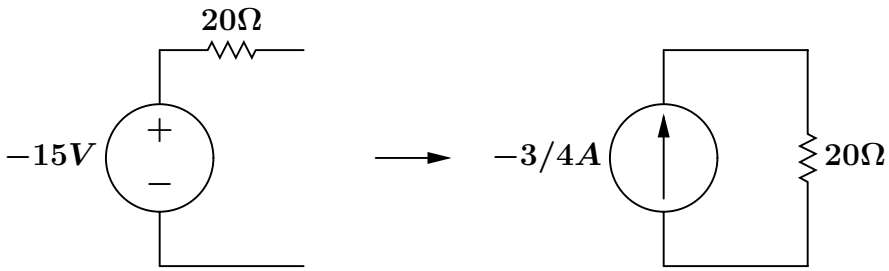

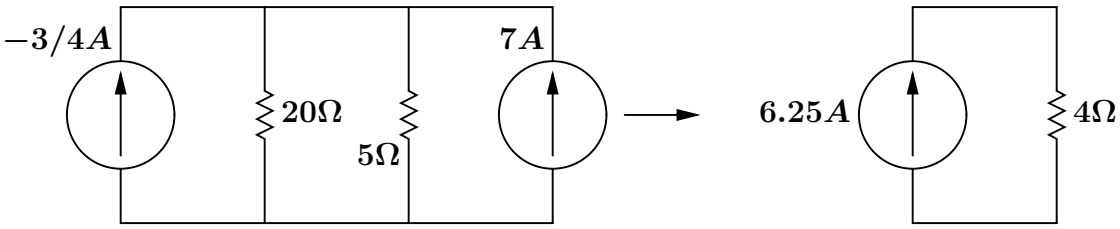

Thevenin Equivalent: (Box Y):

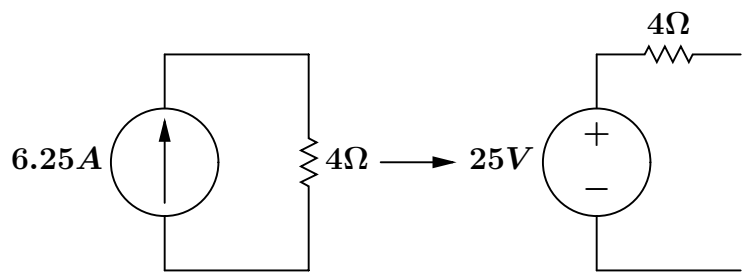

Transformed Circuit (with solution):

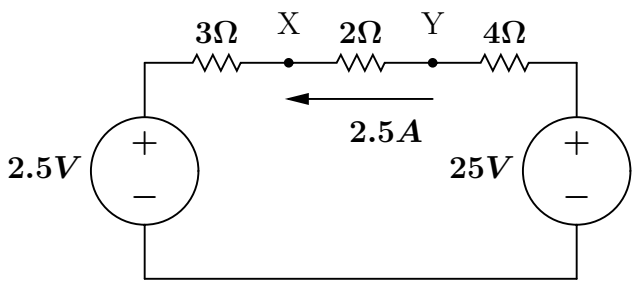

$$V_X = 2.5 + 3(2.5) = 10$$
$$V_Y = 25 - 4(2.5) = 15$$

1. d.

Power is

$$P = (4)^2/13 + 6^2/4 + 12^2/12 + 5^2/2 + 15^2/5 + 30^2/20 + 7^2 \cdot 37 = 1937.731W$$

2. a.

$Z_T = 1/(1/(25/4) + 1/(-j25/3)) = 25/(4 + j3) = \boxed{4 - j3\Omega}$.

2. b.

Optimum load is $\boldsymbol{Z_L^{opt} = (Z_T)^* = \boxed{4 + j3\Omega}}$

2. c.

Composite load $\boldsymbol{Z_L + Z_T = (4 - j3) + (4 + j3) = 8 + j0\Omega}$ so $\mathbf{I}$=$\boldsymbol{4/(8 + j0) = 0.5}$ ARMS. Power dissipated in resistive part of load is $\boldsymbol{(1/2)^2 \cdot 4 = \boxed{1.0\ W}}$.

3. a.

The ideal op-amp rule $\boldsymbol{V_{in}(+) = V_{in}(-) = V_{out}/2}$ by the resistive divider formula for the two $\boldsymbol{1.0\ k\Omega}$ resistors. Therefore the overall gain is $\boldsymbol{V_{out}/V_{in} = +2}$. A gain of two is $\boxed{\text{6 dB}}$ and the circuit is $\boxed{\text{NON-INVERTING}}$.

3. b.

The output voltage is independent of a load resistor from $\boldsymbol{V_{out}}$ to ground, as seen by the solution above. Therefore the output voltage is not reduced by any finbite load impedance and so the output impednace is $\boxed{\mathbf{0\Omega}}$

3. c.

No current flows into the terminal $\boldsymbol{V_{in}(-)}$ for an ideal op-amp. Thus the input impedance=$\boldsymbol{V_{in}/I_{in} = \boxed{\infty\Omega}}$.