Moving-Iron Transducer

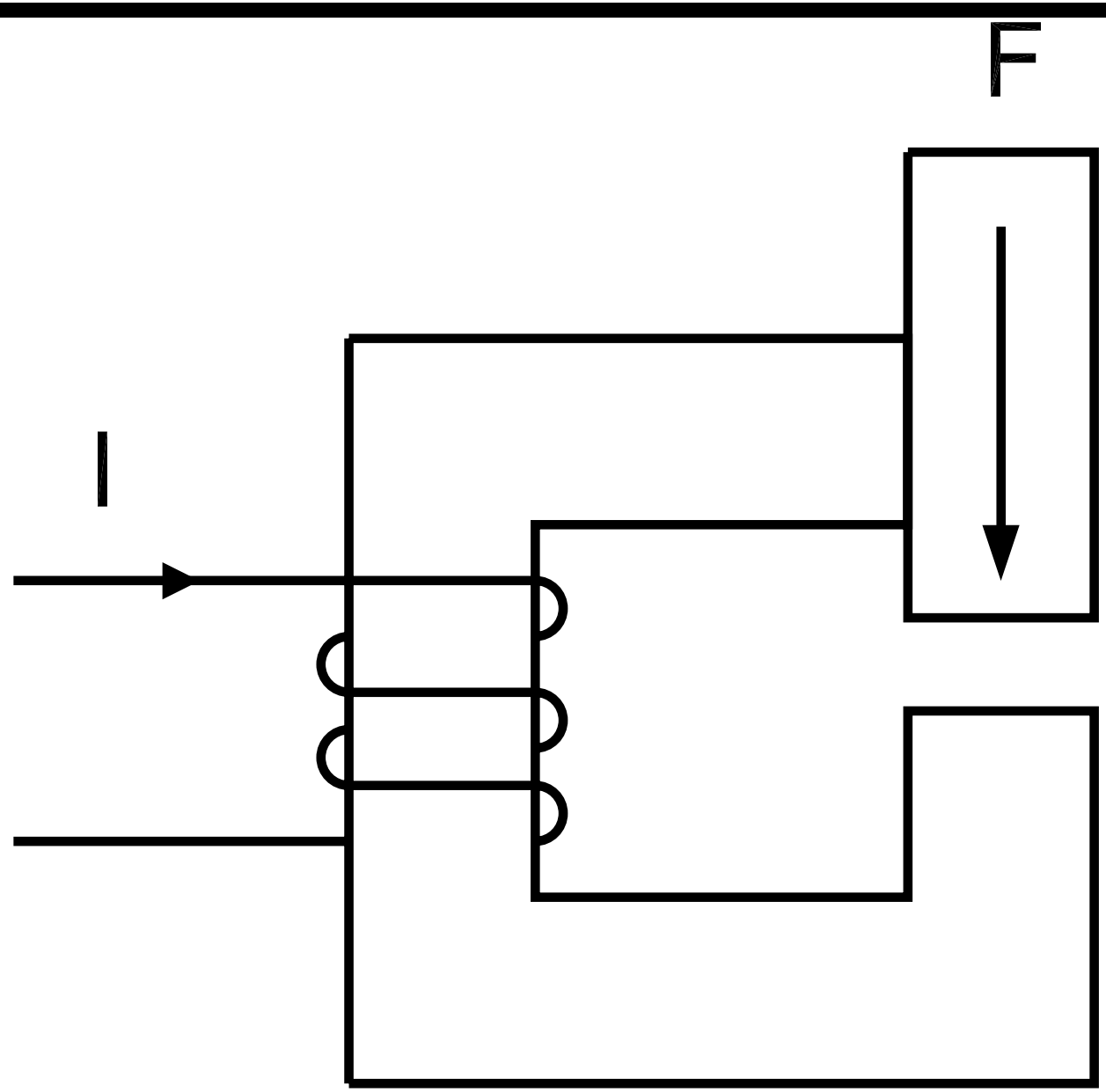

Energy in Magnetic System

Energy Conservation Law:

$$VIdt = Fdx + d(\frac{1}{2}LI^2)$$

Inductive Voltage (Changing L)

$$V = \frac{d\Phi}{dt} = \frac{d}{dt}(LI)$$

Force Equations (Changing L)

$$Id(LI) = Fdx + LIdI + \frac{I^2}{2}dL$$

Simplifying:

$$\frac{I^2}{2}dL = Fdx$$

or:

$$F = \frac{I^2}{2}\frac{dL}{dx}$$

Moving-Coil Transducer

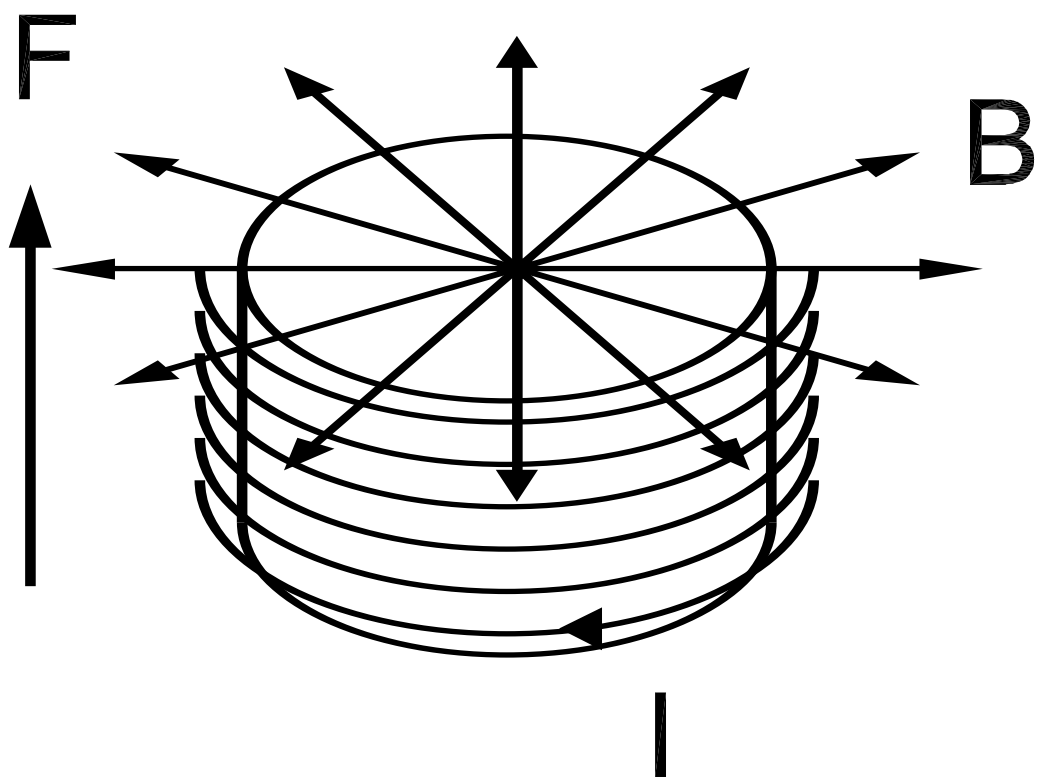

Loudspeaker Equations

$$
\begin{aligned}
-m\omega^2 x + j\omega\gamma x + kx &= B\ell i \\
j\omega L i + Ri &= V_0 - j\omega B\ell x
\end{aligned}
$$

Solution To Loudspeaker Equations

$$x = \frac{-jB\ell V_0}{B^2\ell^2\omega + kL\omega + j\gamma L\omega^2 - Lm\omega^3 - jkR + \gamma\omega R + jm\omega^2\ R}$$

$$i = \frac{(k + j\gamma\omega - m\omega^2)V_0}{(-jB^2\ell^2\omega - (k + j\gamma\omega - m\omega^2)(j\omega L + R))}$$
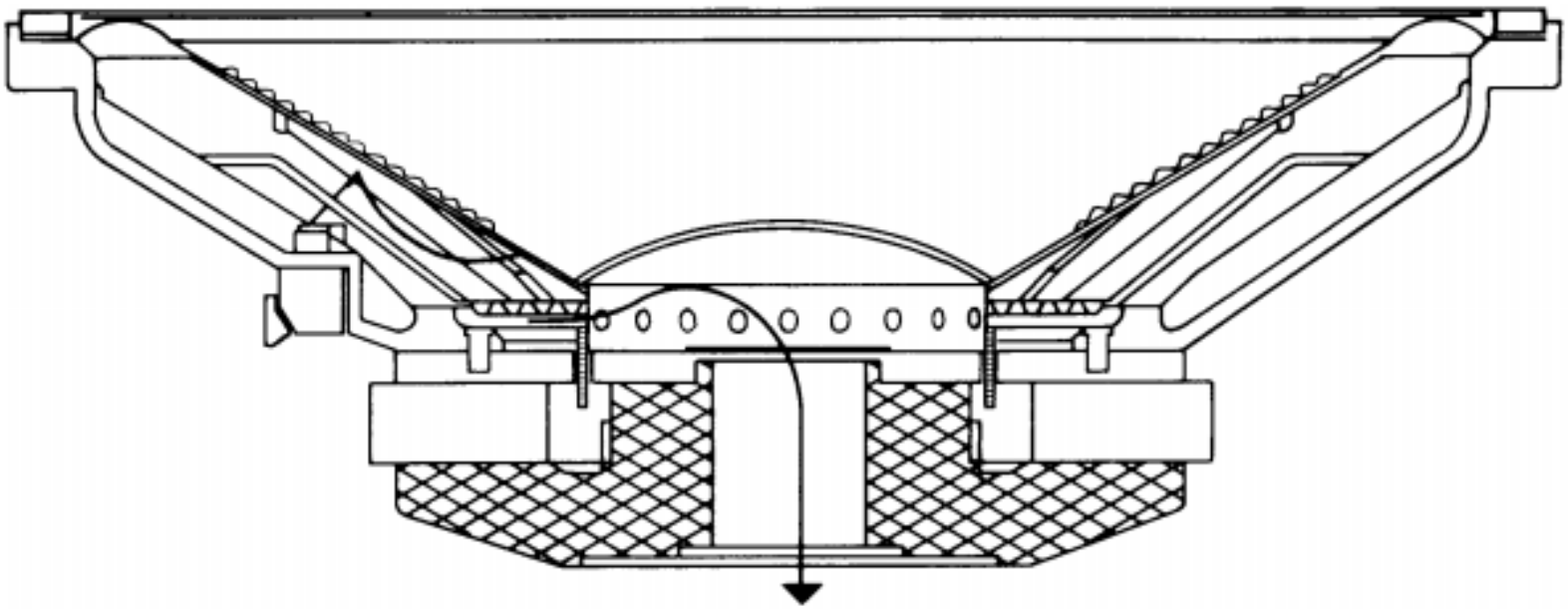
JBL 2225 Low Frequency Transducer