Bharathwaj Muthuswamy
mbharat@cory.eecs.berkeley.edu

Active Filters

1. Introduction

In this chapter, we will deal with active filter circuits. Why even bother with active filters? Answer: Audio. Most (99%) of audio devices have filters in them. They allow you to separate out different frequency regimes. Your project this semester is to design an audio amplifier. This chapter is organized as follows:

2. A Review of Complex Numbers and Introduction to Frequency Response: In this section, I talk about why complex numbers, the standard form of a complex number, Euler's forumla, the impedence of a resistor, capacitor etc.
3. An Overview of Filter Circuits: I discuss terms like active filters, passive filters, low-pass, high-pass, band-pass and band-reject filters.
4. A Passive Filter Circuit - The RC low-pass filter: I will derive in detail the expression for the frequency response of an RC circuit and show how it can be used as a low pass filter.
5. An Active Filter Circuit - The Op-amp band-pass filter circuit: I will derive in detail the expression for the frequency response of this circuit and show how it can be used to construct a band-pass filter.

2. A Review of Complex Numbers and Introduction to Frequency Response

So far you have been mainly dealing with DC analysis – **D**irect **C**urrent analysis. That is, you did not take into effect the consequences of voltage signals that are varying in time. These consequences are reflected in the so called <u>impedence relationship on frequency</u>: every circuit element – resistor, capacitor and inductor – has an impedence dependent on frequency. We will quantify this relationship later. For now, think about an impedence as a "frequency dependent resistance".

Take the capacitor – you know that at DC a capacitor can be modelled as an open circuit. We can prove this once we know how the impedence of a capacitor varies as a function of frequency , namely $Z(\omega) = \frac{1}{j\omega C}$ where Z is the impedence of the capacitor (ohms), ω the angular frequency (radians/sec) and C the capacitance. Note that "j" is used in electrical engineering instead of "i" to denote $\sqrt{-1}$ because "i" is reserved for current. Now, we know that for DC $\omega = 0$, therefore Z $\rightarrow \infty$. Before we derive the expression for Z above, let us review complex numbers.

i. A Review of Complex Numbers

A complex number is an ordered pair (a,b) that is represented in the form:

$$z = a + j \cdot b \tag{1}$$

where a and b are real numbers and j is defined to be $\sqrt{-1}$. The real part of the complex number is a and the imaginary part is defined to be $j \cdot b$. Complex numbers conveniently help us model amplitude and phase changes in sinusoidal signals. To see why, consider how we graphically represent a complex number:

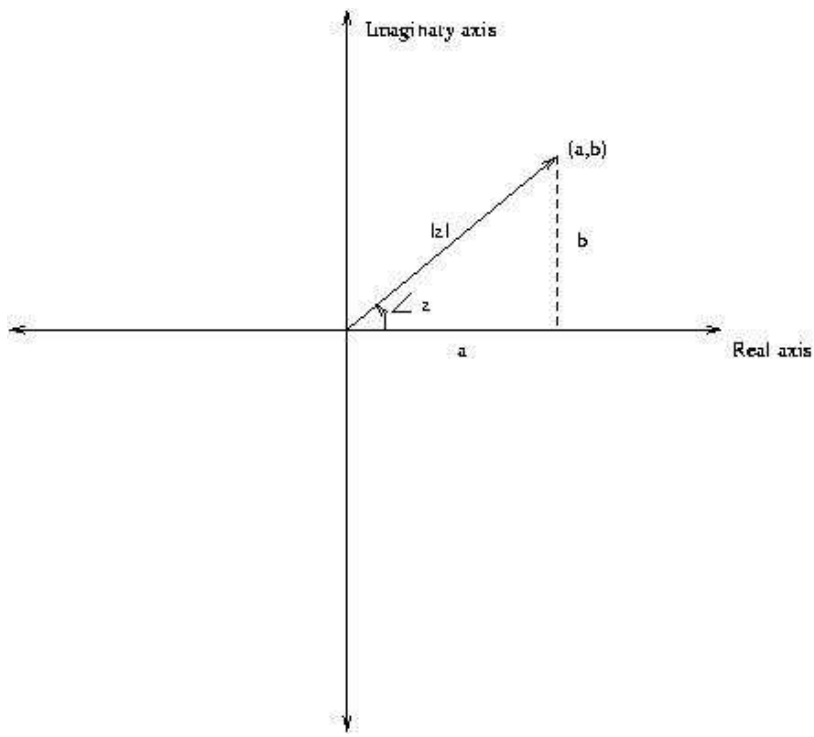

Figure 1. The Complex Plane

The x-axis is the real axis where you plot the real part of the complex number and on the y-axis you plot the imaginary part. We obviously get a vector in the complex plane – this vector has a magnitude and an angle that is defined by:

$$|z| = \sqrt{a^2 + b^2} \tag{2}$$

$$\measuredangle z = \arctan\left(\frac{b}{a}\right) \tag{3}$$

But how the heck do we relate this magnitude and angle to the magintude and phase of a sinusoid respectively? Euler's formula is the missing link[1]:

$$e^{j\Theta} = \cos(\Theta) + j\sin(\Theta) \tag{4}$$

Proving this formula is easy – use power series expansions for e, cos and sin. The magintude of the complex number above is:

$$\left|e^{j\Theta}\right| = \left|\cos(\Theta) + j\sin(\Theta)\right| = \sqrt{\cos(\Theta)^2 + \sin(\Theta)^2} = 1 \tag{5}$$

and the phase is:

$$\measuredangle\, e^{j\Theta} = \arctan\left(\frac{(\sin(\Theta))}{(\cos(\Theta))}\right) = \Theta \tag{6}$$

Thus, a time-varying sinusoid with a magnitude A and phase angle Θ can be represented by: $A\ e^{j(\omega t + \Theta)}$ [2].

Hence, instead of sending a sinusoidal current or voltage through our circuit, we can pass a complex exponential signal to the circuit and see the response. Let us see how using a complex exponential simplifies our circuit analysis.

ii. An Introduction to Frequency Response

Let us examine what happens to the output voltage or current when we pass a complex exponential signal[3] as the input to our three elements: the resistor, capacitor and inductor.

<u>Case i: Resistor:</u>

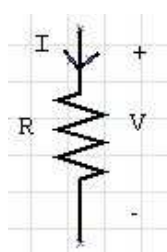

1 Notice this link explains why we need complex numbers – a vector in the real (as opposed to complex) xy plane also has a magnitude and angle. However, it is very difficult to relate this to a sinusoid.

2 This is not completely accurate: a sinusoid is the complex part of the complex exponential. However, getting into these mathematical details only leads to more confusion, doesn't give us more insight.

3 Please note: a complex exponential is just one way of **representing** a sinusoidal signal. The reason we use a complex exponential is because it simplifies the mathematics. In reality, it does not make sense to talk about an "imaginary voltage signal".

Suppose $\mathbf{V} = V \quad e^{j(\omega t + \Theta)}$ volts, then by Ohm's law:

$$\mathbf{I} = \frac{\mathbf{V}}{\mathbf{R}} \tag{7}$$

In other words, the impedence of a resistor is:

$$Z_R(\omega) = \mathbf{R} \text{ ohms.} \tag{8}$$

This makes sense – the impedence of a resistor is independent of frequency! $Z(\omega)$ will be used to denote impedence – the subscripts R, C or L denote the element.

Another very important note about notation: since we are working with frequency dependent signals, we represent them in uppercase boldface: $\mathbf{V}$ represents $V \sin(\omega t + \Theta)$ volts, where the magnitude is V volts and phase angle is Θ. $\mathbf{V}$ is also called a phasor and the notation is called phasor notation.

<u>Case ii: Capacitor:</u>

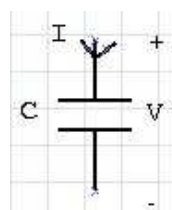

Let us apply an input voltage to our capacitor of the form: $\mathbf{V} = V \quad e^{j(\omega t + \Theta)}$ volts. In the time domain:

$$i(t) = C\frac{dv}{dt} = Ce^{j(\omega t + \Theta)} j\omega = (j\omega C)v(t) \tag{9}$$

In phasor notation:

$$\frac{\mathbf{V}}{\mathbf{I}} = \frac{1}{(\mathbf{j}\omega\mathbf{C})}\mathbf{ohms} \tag{10}$$

Notice we have defined an impedence of the capacitor. Now you should be able to see why a capacitor is open circuit for DC.

<u>Case iii: Inductor:</u> It should be easy to prove that $Z_L(\omega) = j\omega L$ ohms.

We can see that using a complex exponential allows us to concisely model the impedence of the common circuit elements. This simplifies our circuit analysis, because we can just analyze the impedence network instead of dealing with the differential equation. Consider the RC circuit below and suppose we want to find V_o for a given sinusoidal V_i.

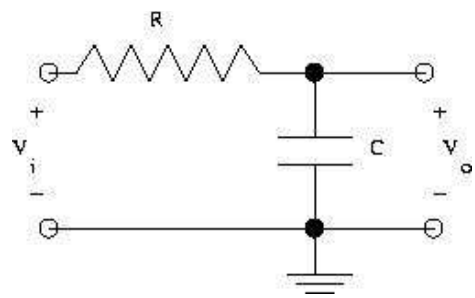

Figure 2. The standard RC circuit

In the RC circuit above, let us first convert the components to their impedences and the voltages to the phasor notation:

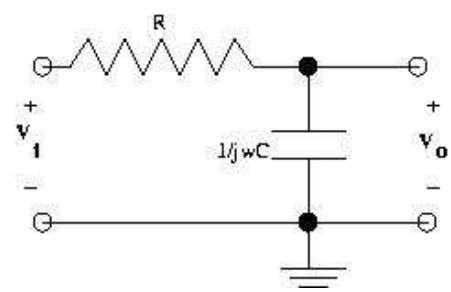

Figure 3. The RC circuit in the frequency domain

Since we are just dealing with resistances, we can simply use a voltage divider to find V_o:

$$\mathbf{V_o} = \frac{\dfrac{1}{(\mathbf{j}\,\omega\,\mathbf{C})}}{\dfrac{1}{(\mathbf{j}\,\omega\,\mathbf{C})} + \mathbf{R}}\mathbf{V_i} \qquad (11)$$

Simplifying the expression above:

$$\mathbf{H}(\mathbf{j}\,\omega) = \frac{\mathbf{V_o}}{\mathbf{V_i}} = \frac{1}{1 + \mathbf{j}\,\omega\,\mathbf{R}\,\mathbf{C}} \qquad (12)$$

Notice the final answer has both a magnitude and phase component dependent on frequency. We denote this special function – <u>the frequency response of the circuit</u>. It is

defined as the ratio of the output phasor to the input phasor. In our case it is the ratio of the output phasor voltage to the input phasor voltage.

The frequency response is very helpful since it helps us calculate the output signal, given an input signal with a specific frequency. Suppose: $V_i = 5\sin(2000t + \frac{\pi}{4})$ volts. Let R = 1k ohm, C = 1uF. Thus:

$$\mathbf{H}(\mathbf{j}\,\omega) = \frac{1}{1 + \mathbf{j}\,\omega\,(\mathbf{1k})(1\,\mu)} = \frac{1}{1 + \mathbf{j}\,\omega\,0.001} = \frac{1}{1 + \mathbf{j}\,\frac{\omega}{1000}} \qquad (13)$$

The last form is useful because it lets us quickly plugin a value for ω to calculate the frequency response. Here ω = 2000 radians/sec:

$$\mathbf{H}(\mathbf{j}\,2000) = \frac{1}{1 + \mathbf{j}\,\frac{2000}{1000}} = \frac{1}{1 + \mathbf{j}\,2} \qquad (14)$$

Hence the magnitude of the frequency response is:

$$\left|\mathbf{H}(\mathbf{j2000})\right| = \left|\frac{1}{1 + \mathbf{j2}}\right| = \frac{|1|}{|1 + \mathbf{j2}|} = \frac{1}{\sqrt{1^2 + 2^2}} = 0.447 \qquad (15)$$

Here I used the division property for the magnitude of two complex numbers z1 and z2:

$$\left|\frac{\mathbf{z1}}{\mathbf{z2}}\right| = \frac{|\mathbf{z1}|}{|\mathbf{z2}|} \qquad (16)$$

The phase is:

$$\measuredangle\,\mathbf{H}(\mathbf{j2000}) = \measuredangle\,1 - \measuredangle\,(1 + \mathbf{j}\,\frac{2000}{1000}) = -\,63\,\mathbf{degrees} \qquad (17)$$

Here I used the division property for the phase angle of two complex numbers z1 and z2:

$$\measuredangle\,\frac{\mathbf{z1}}{\mathbf{z2}} = \measuredangle\,\mathbf{z1} - \measuredangle\,\mathbf{z2} \qquad (18)$$

Note that sine is 2 π periodic, an angle of 360 + -63 = 296 degrees is also correct.
But how does this help us calculate the output? Again, complex numbers come to our rescue:

$$\mathbf{H}(\mathbf{j}\omega) = \frac{\mathbf{V_o}}{\mathbf{V_i}} \tag{19}$$

$$\Rightarrow \quad \mathbf{V_o} = \mathbf{H}(\mathbf{j}\omega)\mathbf{V_i} \tag{20}$$

$$\Rightarrow \quad \mathbf{V_o} = \mathbf{H}(\mathbf{j2000})\,5\,\mathbf{e}^{\mathbf{j}(2000\,\mathbf{t} + \frac{\pi}{4})} \tag{21}$$

$$\Rightarrow \quad \mathbf{V_o} = 0.447\,\mathbf{e}^{\mathbf{j}(296)}\,5\,\mathbf{e}^{\mathbf{j}(2000\,\mathbf{t} + \frac{\pi}{4})} \tag{22}$$

Thus, the magnitude of the output is just the magnitude of the input times the magnitude of the frequency response at the input frequency. The phase of the output is the sum of the phase of the input and the phase of the frequency response. Also notice, the frequency of the output is the same as the input. Therefore, v_o (t) is:

$$v_o(t) = 2.23\sin(2000t + 233 \text{ degrees}) \text{ volts} \tag{23}$$

So, how is this circuit useful? Notice how the amplitude of the output decreased – the circuit is acting as a filter. Before we go on, a note about frequency: please remember that we can talk about either radians/second or hertz, the relationship between the two is:

$$\omega = 2\pi\,\mathbf{f} \tag{24}$$

3. An Overview of Filter Circuits

A filter circuit (as the name suggests) filters stuff. In our case, the circuit allows sinusoids of a certain frequency to appear at the output, it attenuates sinusoids at other frequencies – that is, the circuit does not allow them to appear at the output. We will see how in the next section. The main types of filter circuits are:

i. <u>Low-pass filter:</u> This circuit allows frequencies below a specific frequency to pass through. Higher frequencies are attenuated. The RC circuit considered above is a low pass filter circuit – we will see how in the next section.
ii. <u>High-pass filter:</u> Allows frequencies above a specific frequency to pass through. Lower frequencies are attenuated.
iii. <u>Band-pass filter:</u> Frequencies in a specific range (or band), example: [1 kHz, 1 MHz] pass through. Frequencies above 1 MHz and below 1kHz are attenuated.
iv. <u>Band-reject filter:</u> Frequencies in a specific range (or band), example: [1kHz, 1MHz] are attenuated. Frequencies above 1 MHz and below 1 kHz are allowed to pass through.

Filter circuits can also be classified as passive or active. Passive circuits contain only impedences – they are not capable of amplifying the output signal. Active circuits

contain an amplifier (like an op-amp) as well. Hence, the RC circuit is an example of a passive filter circuit. We examine more details of this circuit next.

4. A Passive Filter Circuit - The RC low-pass filter

Let us go back to the RC circuit and figure out what happens as ω changes:

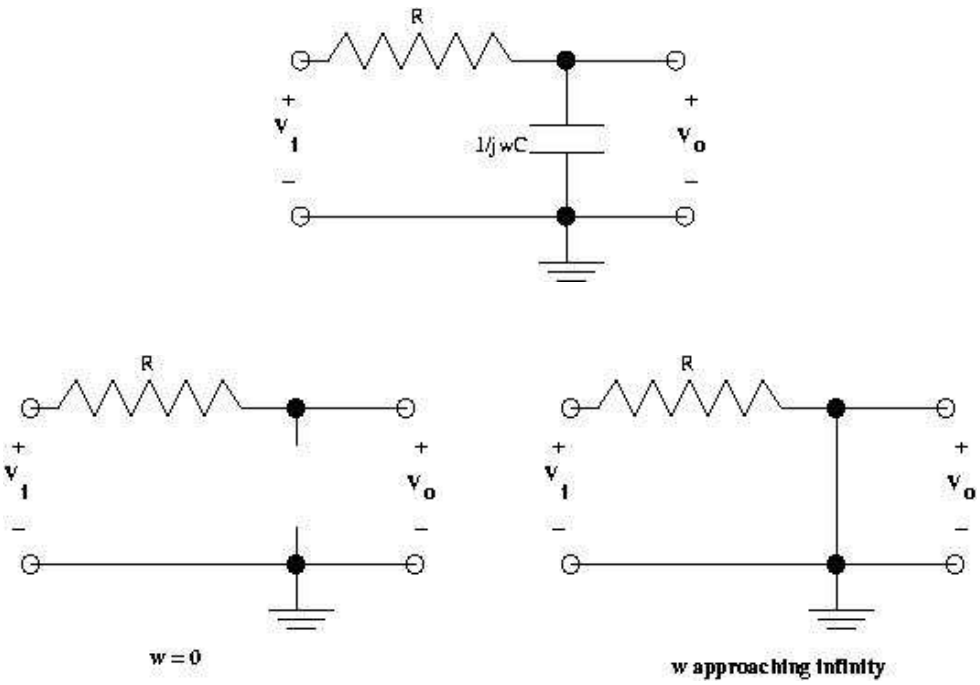

Figure 4. The RC circuit in the frequency domain and the model as $\omega = 0$ and $\omega \to \infty$

You can see that if $\omega = 0$ rad/sec, the capacitor acts as an open circuit and hence $V_o = V_i$. However as $\omega \to \infty$, the capacitor acts as a short circuit and $V_o = 0$ volts. Therefore the circuit is acting as a low-pass filter: it attenuates higher frequencies.

The frequency of interest turns out to be 1/RC. You may have guessed this from the expression for **H(jw)** from section 2. A more detailed explanation of the characteristics of the frequency response is beyond the scope of this class. It is sufficient for you to learn how to derive the frequency response from impedences and determine the kind of filter you have: low-pass, high-pass, band-pass or band-reject; active or passive.

5. An Active Filter Circuit - The Op-amp band-pass filter circuit

Let us analyze the circuit below:

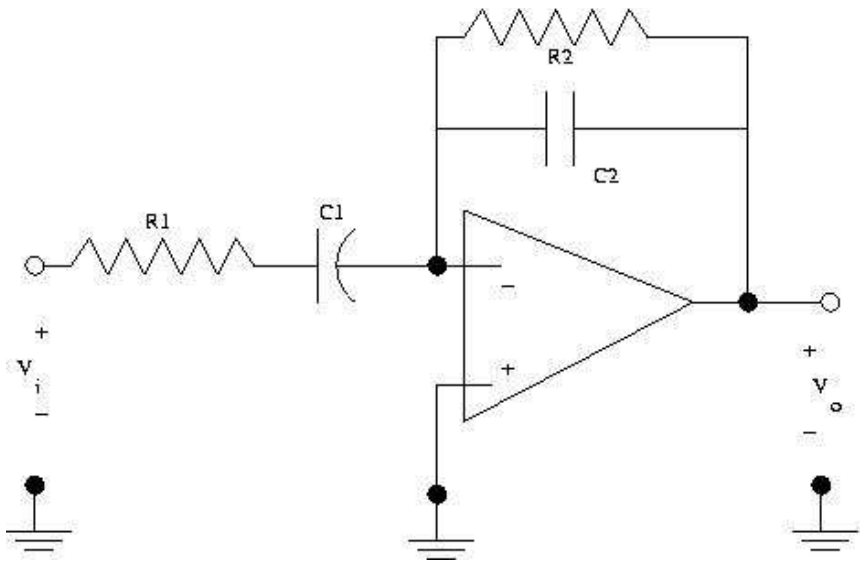

Figure 5. The op-amp bandpass filter

The frequency response for the circuit above is:

$$\mathbf{H}(\mathbf{j}\omega) = \frac{-\mathbf{j}\omega\,\mathbf{R2C1}}{(1+\mathbf{j}\omega\,\mathbf{R1C1})(1+\mathbf{j}\omega\,\mathbf{R2C2})} \tag{25}$$

It will be a good exercise for you to derive the relationship above. Use ideal op-amp assumptions (i.e..ignore the rails). But, it is more important to qualitatively understand how this circuit works. This will be indispensible for your project.

At very low frequencies, both the capacitors are open-circuits (remember: a capacitor is open circuit to DC since the impedence of a capacitor goes to infinity as ω goes to zero). Redrawing figure 5 as ω goes to zero and the capacitors open, we get figure 6.

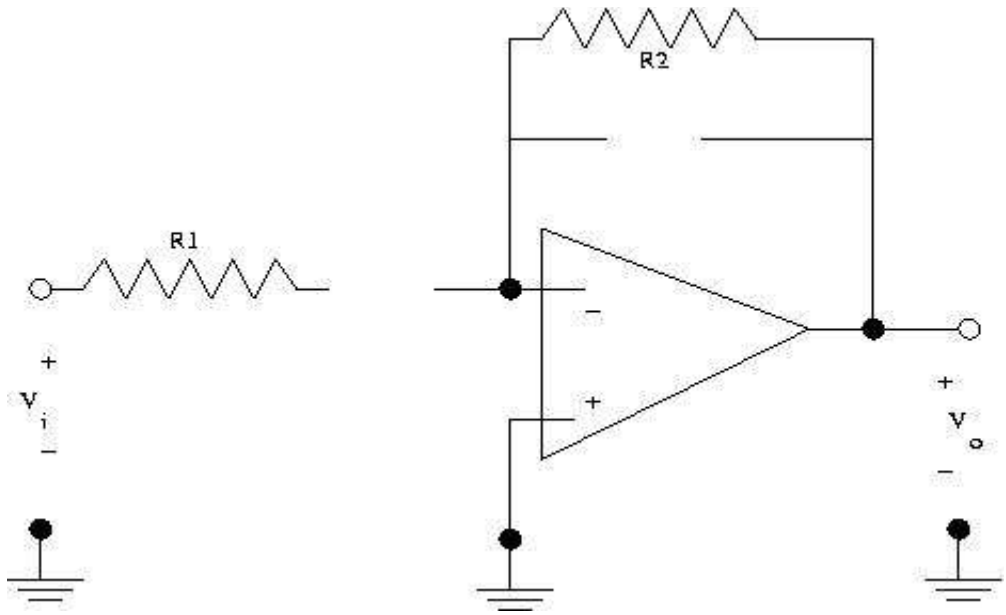

Figure 6. The op-amp bandpass filter at DC.

Notice V_o is zero. The reason is V_o = Vn (the voltage at the inverting terminal) since no current flows through R2. Now, Vn = Vp = 0 V. Similarly, at high frequencies the capacitors are modelled as short circuits. R2 is then shorted out and Vo is again forced to V- as shown in figure 7. Therefore, this op-amp will attenuate very low frequencies and very high frequencies, letting signals pass through in some frequency range in-between. To determine the exact frequency range, you have to do circuit analysis and obtain equation (25).

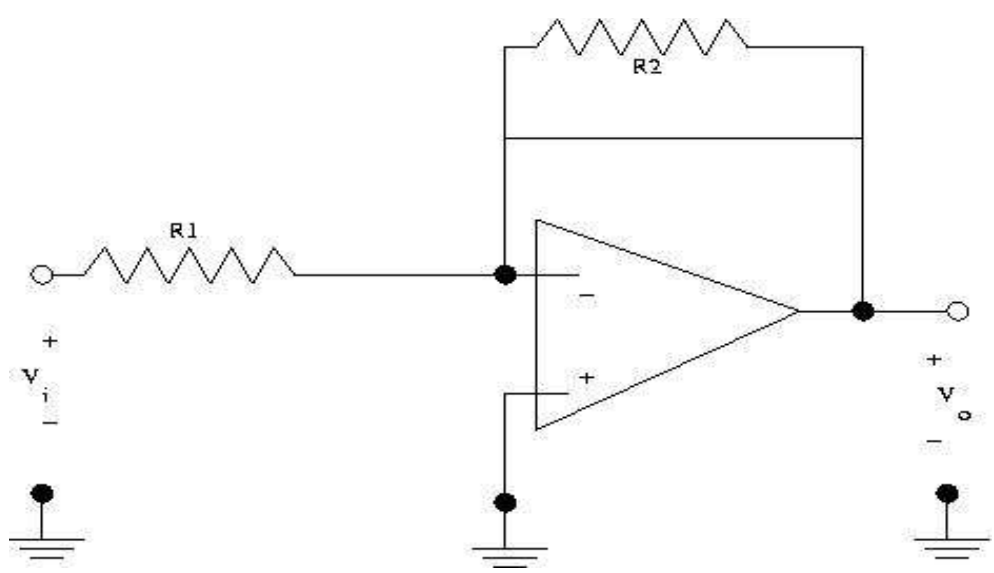

Figure 7. The op-amp bandpass filter as ω goes to infinity

6. **Conclusion**

I have just given you an overview of filter circuits, enough knowledge to start building useful circuits starting with your project. Unfortunately, a detailed description of filter circuits is beyond the scope of this class.

The most important component that I could not cover is Bode plots. A bode plot is actually two plots: one is a plot of the magnitude of the frequency response versus log of the frequency and the other is a plot of the phase of the frequency response versus log of the frequency. The bode plot for the RC filter is shown below:

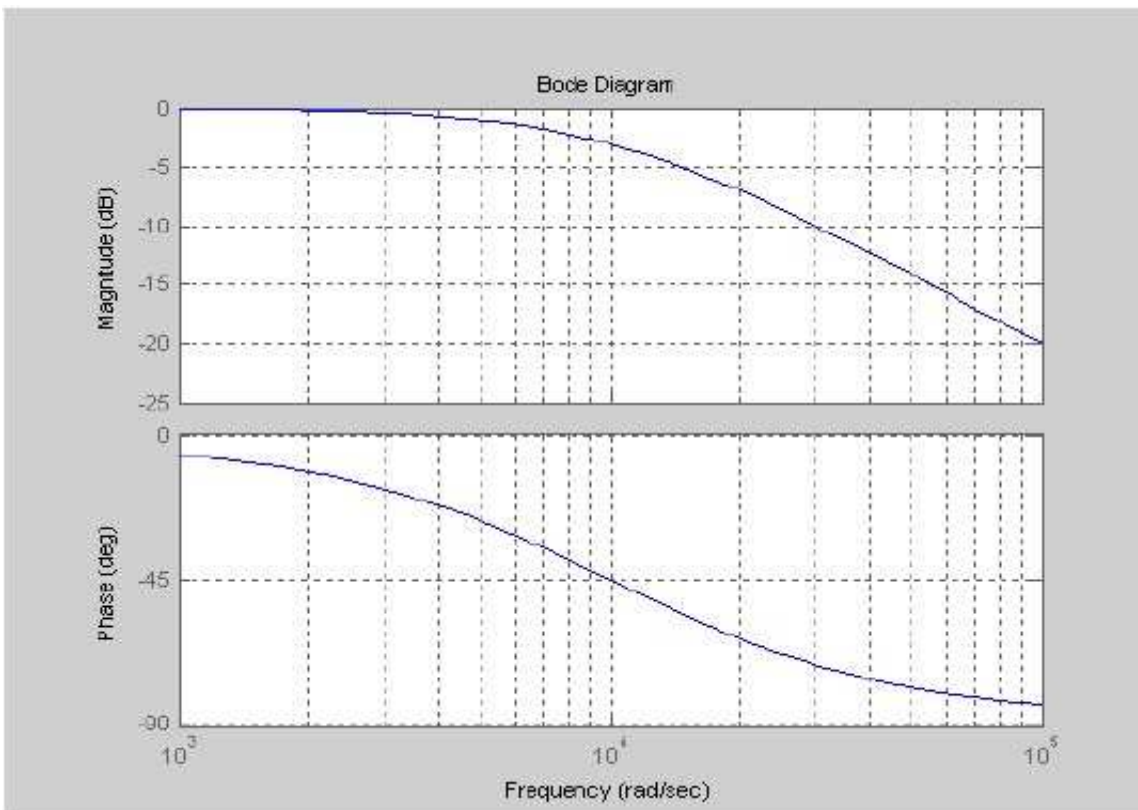

Figure 8. Bode plot of an RC low pass filter
[Ref: http://www.engr.sjsu.edu/wdu/Mechatronics/Fall2004/Reference/RCFilterLectureNote.pdf]

Notice how the magnitude of the function decreases after a certain frequency. The y-axis of the magnitude of the bode plot is actually in dB (decibels) for historical reasons. To convert magnitude to dB, use: Mag (in dB) = $20\log|H(j\omega)|$, where the log is base 10. For instance, in the plot above, for very low frequencies the value of the function is 0 dB. That means:

$$|H(j\omega)| = 10^0 = 1 \qquad (26)$$

Does this make sense? If it is not clear, ask one of the instructors to help you.