Lecture 9 – LabVIEW / Midterm review

Administrivia
- Grades (Hwk #1, Hwk #2) up later today (or tomorrow)
- Midterm
  - Review today
  - Justin's review on Wednesday
  - Extra OH → check Exams link on EE100 homepage.

Q/A session

This week you only have lab (LabVIEW)

Resources:
- → http://inst.eecs.berkeley.edu/~esg/LabVIEW (linked off lab homepage). Click on References for Resources
- → Book, pp. 426 - 436.

Midterm: → Format:
- → 4 Questions [may contain one or two parts each]
- → (Q.1) Nodal Analysis
  (Q.2) RC and/or RL

(Q.3) (a) Thevenin Norton

(b) Source transform

(c) AC analysis (simple)

(Q.4) ?? → maybe hard.

Eg (Q.4)

was going to be on the midterm, but I talked about in OH

Find & plot $V_c(t)$, $t \geq 0$ assuming $V_c(0) = 0V$ & all elements are ideal.

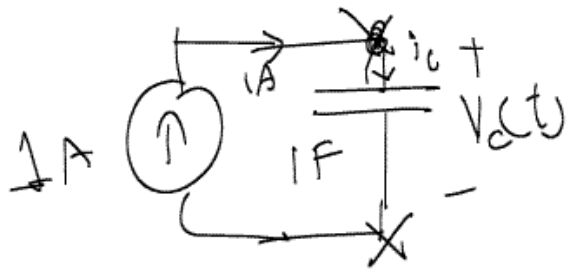

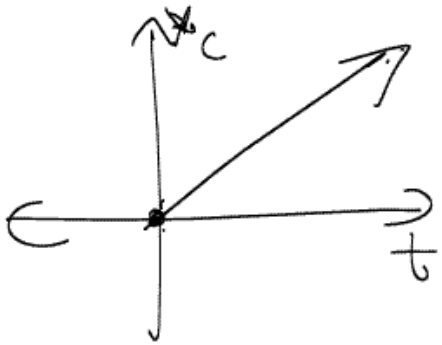

$V_c(t) = ?$, $t \geq 0$

$$V_c(t) = -t \ ?$$

Nodal analysis

$$1 = i_c$$

$$\Rightarrow 1A = \underset{1F}{C}\frac{dv_c}{dt}$$

$$\Rightarrow \frac{dv_c}{dt} = 1$$

$$\Rightarrow v_c(t) = t + v_0 \quad v_c(0) = 0 \Rightarrow v_0 = 0$$

$$\Rightarrow \boxed{v_c(t) = t}$$

$$v_c(t) = v_{c_f} + (v_{c_i} - v_{c_f})e^{-t/\tau}$$

$v_{c_f} = ?$ $\quad \tau = ? = R_{th}C$

$v_{c_i} = 0\ V$

Open circuit source
$\Rightarrow R_{th} \to \infty$

$\Downarrow$

$v_c(t)$ is NOT exponential

(Q:) Do you need supernode on the test?

(A:) No, you don't need it, you could use it.

ES!

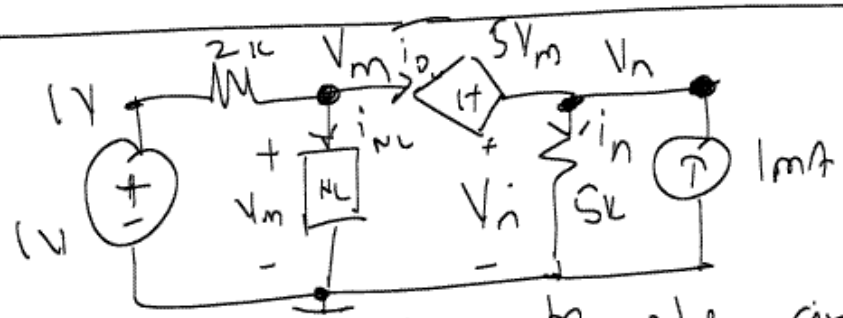

$i =$ Based Function (v)

(Q:) Setup nodal equations to solve circuit above for unknown node voltages

Without supernode

With supernode

KCL @ V_m:

$$\frac{1 - V_m}{2k} = i_{NL} + i_D$$

$$\boxed{\frac{1 - V_m}{2k} = \text{Bessel Function}(V_m) + i_D}$$

KCL @ V_n: $1\,mA + i_D = i_n$

Supernode

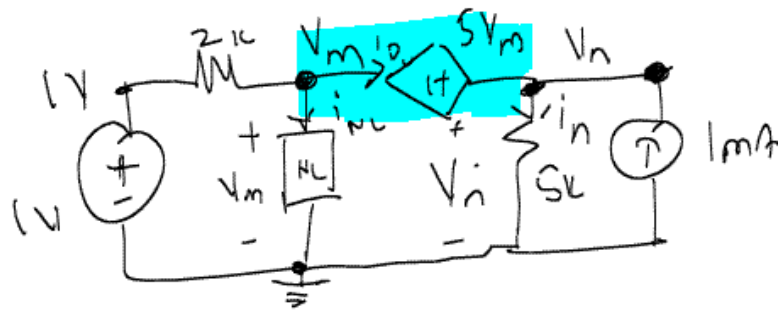

(1) Identify floating voltage sources, i.e., one end of the voltage source is not grounded.

$$\Rightarrow \boxed{1\,mA + i_D = \frac{V_n}{5k}}$$

(2)

(2) KCL at supernode:

$$\frac{1 - V_m}{1k} + 1\,mA = i_{N_1} + i_n$$

$$\Rightarrow \boxed{\frac{1 - V_m}{1k} + 1\,mA = \text{BesselFunction}(V_m) + \frac{V_n}{5k}}$$

(1) & (2)

$$\Rightarrow \boxed{\frac{1 - V_m}{2k} = \text{BesselFunction}(V_m) + \left[\frac{V_n}{5k} - 1\,mA\right]}$$

KVL constraint equation:

$$\boxed{V_n - V_m = 5V_m}$$

(3) "Look" inside supernode to obtain KVL constraint equation

Eg: Quickie (aka 10 second problem)

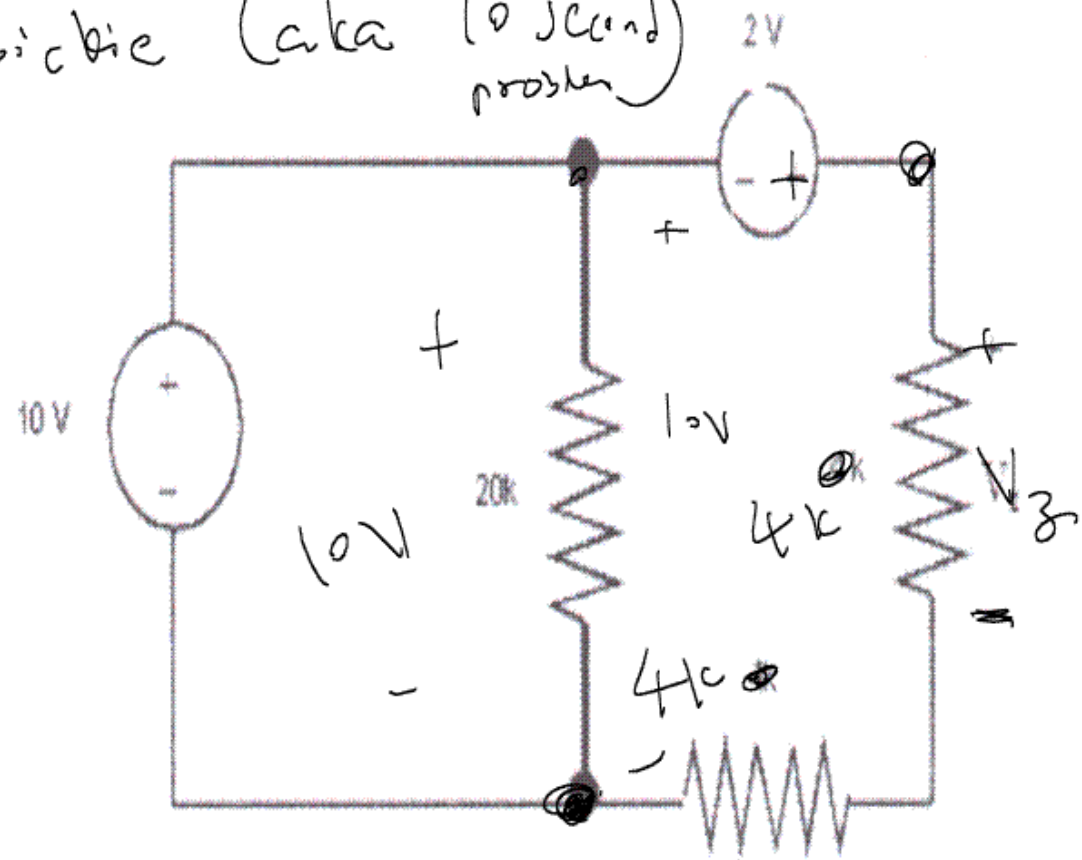

Find V_z :

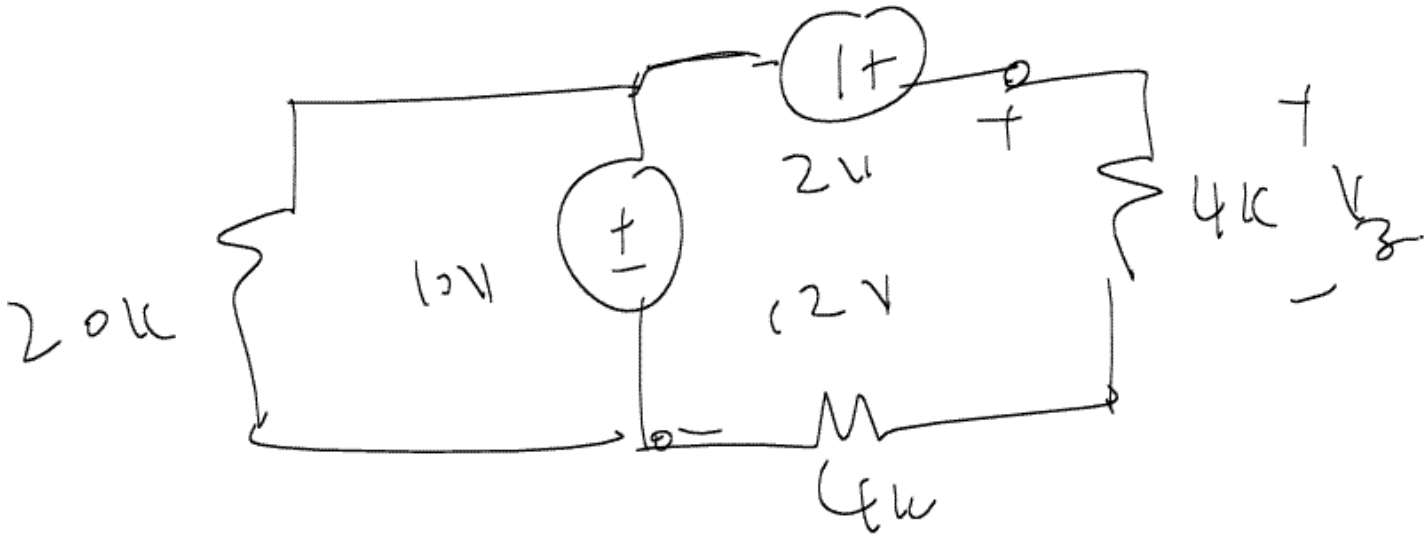

$$V_z = \left(\frac{4k}{4k + 4k}\right) 12V = 6V$$

(voltage divider)

Note:

- No discussion today.
- Extra OH on Thursday (for Bart) (400 Cory, 5 - 9 pm) (in addition to Wed. OH)

(Q:)

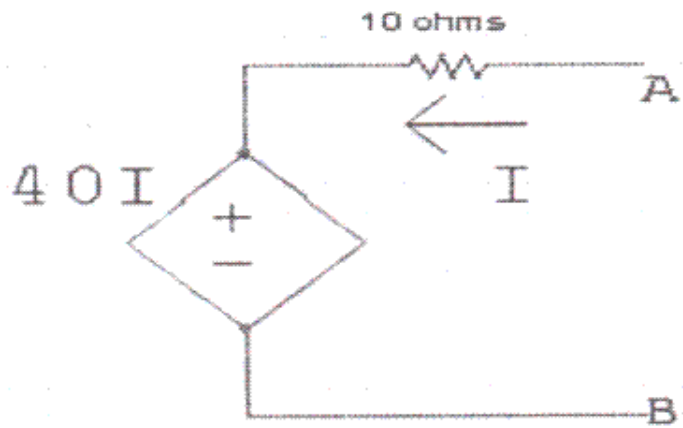

Find Thevenin equivalent.

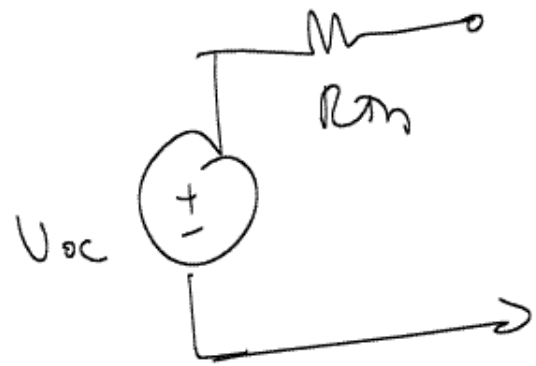

$V_{oc} = 0\ V$

[Special case: only dependent sources, no independent sources in circuit to activate dependent source ⇒ $V_{oc} = 0\ V$]

$R_{th} = ?$

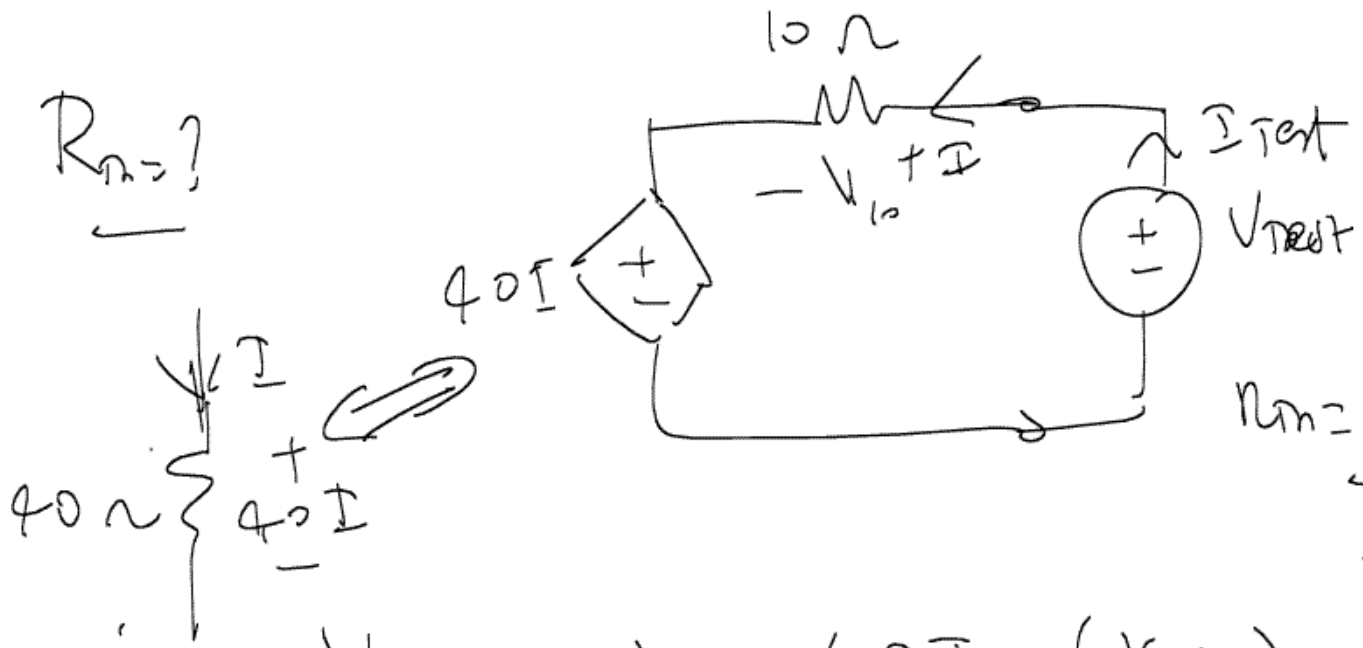

$$R_{th} = \frac{V_{Test}}{I_{Test}}$$

$\therefore \quad V_{Test} = V_{10} + 40I \quad (KVL)$

$$V_{Test} = I(10) + 40I$$

But, $I_{Test} = I \Rightarrow \boxed{R_{th} = 50\Omega}$

Eg:

I consider this as hard problem

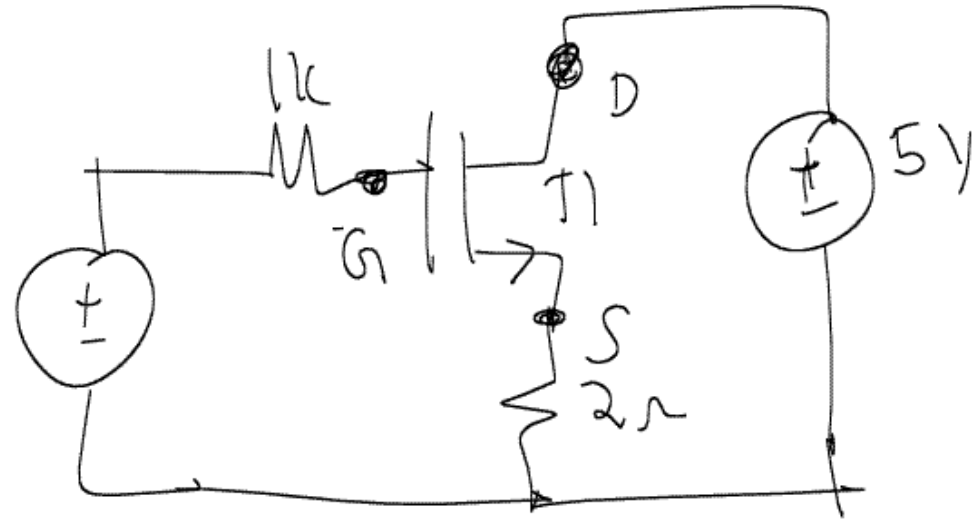

In circuit above, transistor T1 model is:

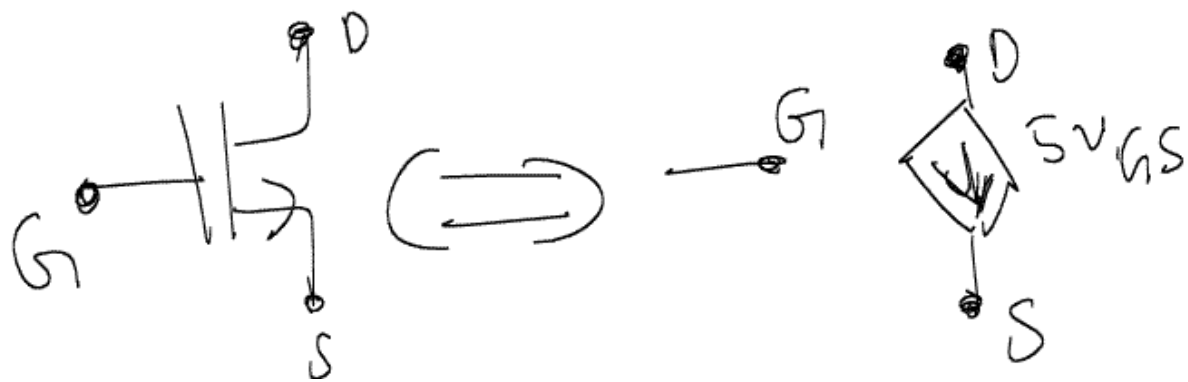

(Q:) Find V_{DS}.

<u>Step 1:</u> Replace T1 with model:

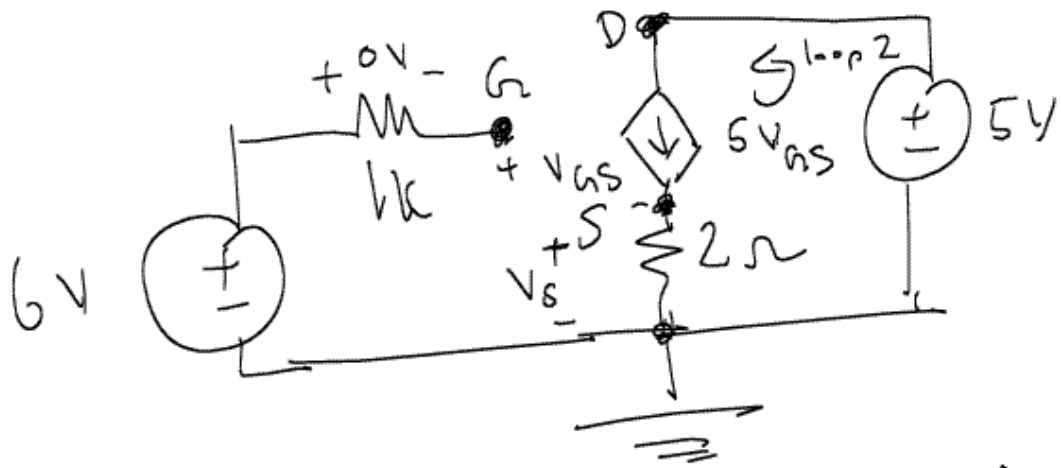

Now, use circuit analysis. I recommend you pick a ground

$$V_{GS} = V_G - V_S$$

$$\Rightarrow V_{GS} = 6 - V_S$$

$$V_S = (2)(5V_{GS})$$

$$\therefore V_{GS} = 6 - (2)(5V_{GS})$$

$$\Rightarrow V_{GS} = 6 - 10V_{GS}$$

$$\Rightarrow \quad 11\,V_{GS} = 6 \Rightarrow \boxed{V_{GS} = \frac{6}{11}\ V}$$

$$\therefore \quad V_G - V_S = \frac{6}{11}\ V \Rightarrow V_S = 6 - \frac{6}{11}$$

$$\Rightarrow \boxed{V_S = \frac{60}{11}\ V}$$

$\therefore$ <u>KVL around loop 2:</u> $V_{DS} = V_D - V_S$

$$= 5 - \frac{60}{11}$$

$$\boxed{V_{DS} = -\frac{5}{11}\ V}$$