EE105 – Fall 2014
Microelectronic Devices and Circuits

Prof. Ming C. Wu

wu@eecs.berkeley.edu

511 Sutardja Dai Hall (SDH)

Invention of Transistors - 1947

Bardeen, Shockley, and Brattain at Bell Labs - Brattain and Bardeen invented the bipolar transistor in 1947.

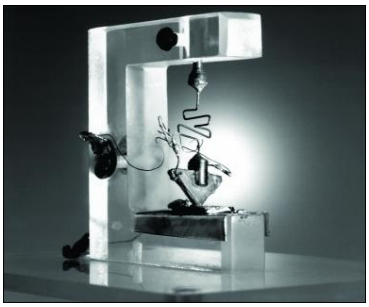

Point contact Ge bipolar transistor

The First Integrated Circuits - 1958

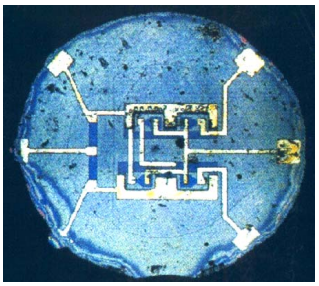

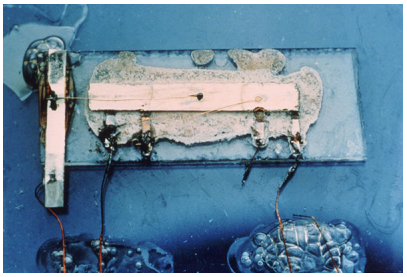

R. N. Noyce
Fairchild Semiconductor
Co-Founder of both Fairchild and Intel (deceased 1990)

"Unitary Circuit" made of Si

Jack Kilby
Texas Instruments
Invented IC during his first year at TI

(Nobel Prize 2000)

"Solid Circuit" made of Ge

Moore's Law

Memory chip density versus time

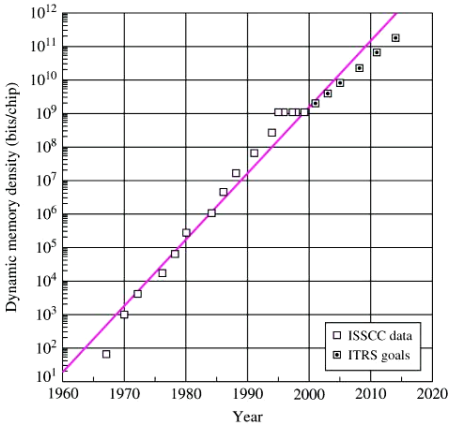

Microprocessor complexity versus time

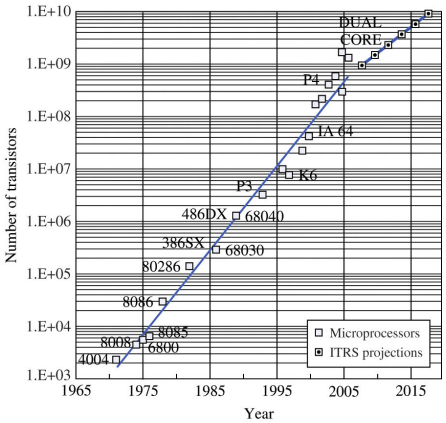

Intel Core i7 Microprocessor (4 Cores)

~ 1.1 Billion Transistors

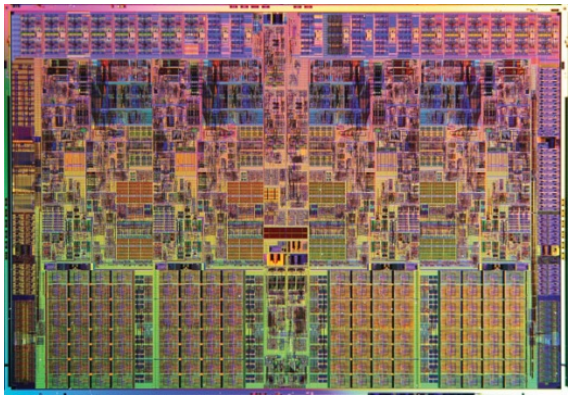

Most powerful processor has about 10B transistors today.
Most powerful FPGA has 20B+ transistors.
http://en.wikipedia.org/wiki/Transistor_count

Moore's Paper in 1965

Cramming more components onto integrated circuits

With unit cost falling as the number of components per circuit rises, by 1975 economics may dictate squeezing as many as 65,000 components on a single silicon chip

By Gordon E. Moore

Director, Research and Development Laboratories, Fairchild Semiconductor division of Fairchild Camera and Instrument Corp.

Dr. Gordon E. Moore is one of the new breed of electronic engineers, schooled in the physical sciences rather than in electronics. He earned a B.S. degree in chemistry from the University of California and a Ph.D. degree in physical chemistry from the California Institute of Technology. He was one of the founders of Fairchild Semiconductor and has been director of the research and development laboratories since 1959.

Moore's Law in 1965

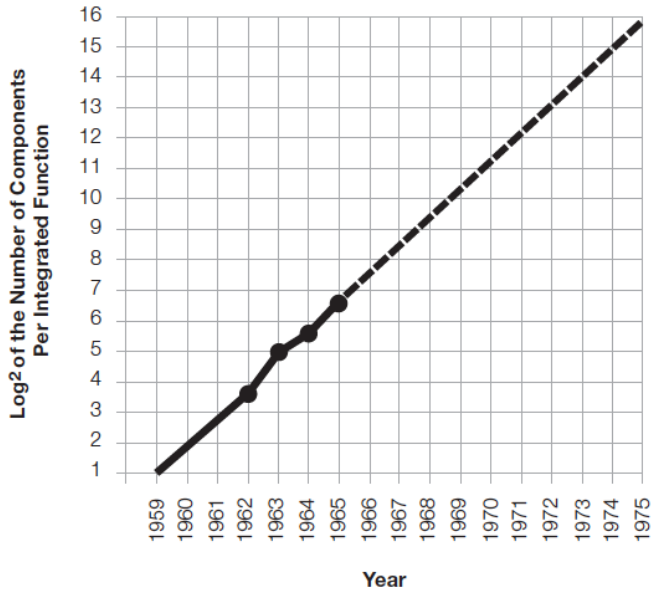

Moore's Arguement

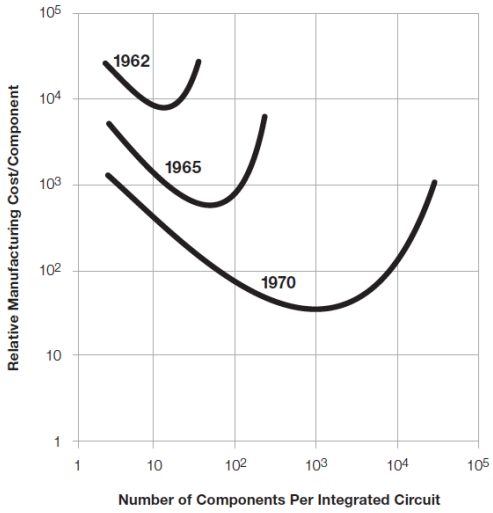

Digital vs Analog

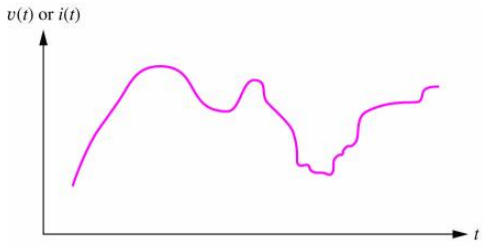

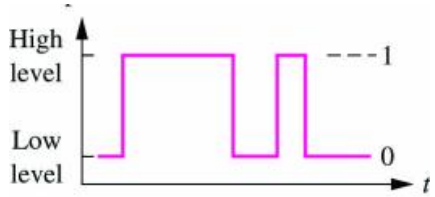

- Analog electrical signals take on continuous values
- Digital signals appear at discrete levels. Usually we use binary signals which utilize only two levels.
- One level is referred to as logical 1 and logical 0 is assigned to the other level.

Why Analog?

- The "real" world is analog
  - Analog is required to interface to just about anything
  - Even to get two digital chips to talk to each other:

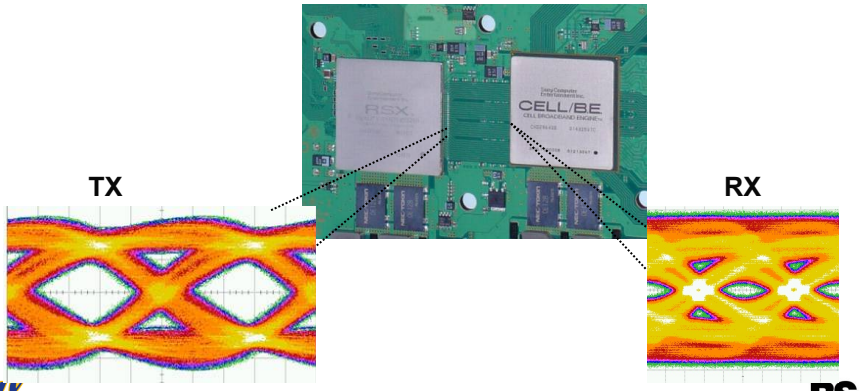

(Elad Alon)

Another Example: RF Transceiver

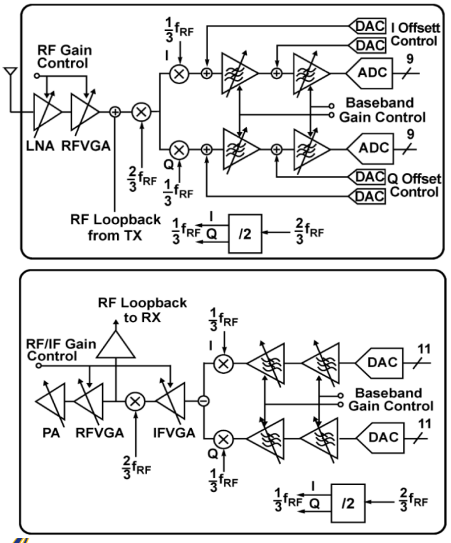

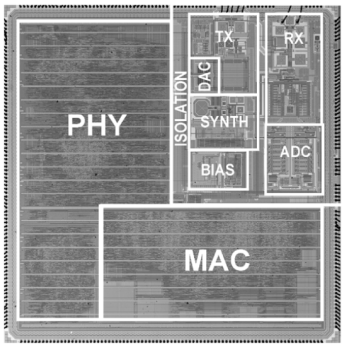

Source: Mehta et al, "An 802.11g WLAN SoC", JSSC Dec. 2005

- **Analog needs to provide gain + filtering with low noise and distortion**

(Elad Alon)

Sensing

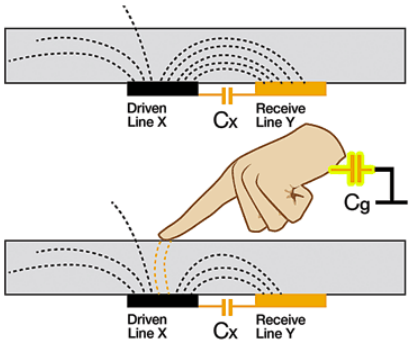

- **Similar to communications – analog needed for signal conditioning**

(Elad Alon)

Creative Touch Sensors

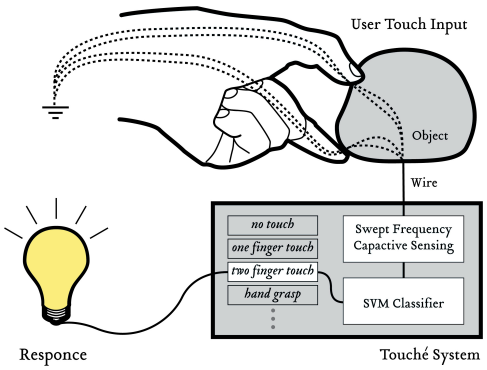

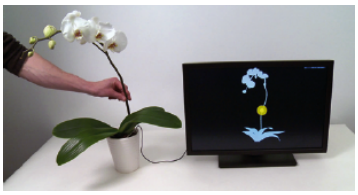

http://www.ivanpoupyrev.com/projects/touche.php

Internet of Things (IoT)

Adapted from Rabaey, *ASPDAC*, 2008

Sensors in a Phone

Lots of sensors:

- 9DoF motion sensing,
  - 3 axis accelerometer
  - 3 axis gyroscope
  - 3 axis compass
- 3 microphones,
- 2 image sensors,
- ambient light and proximity sensors,
- archetypal touch screen sensor.

Inside iPhone4

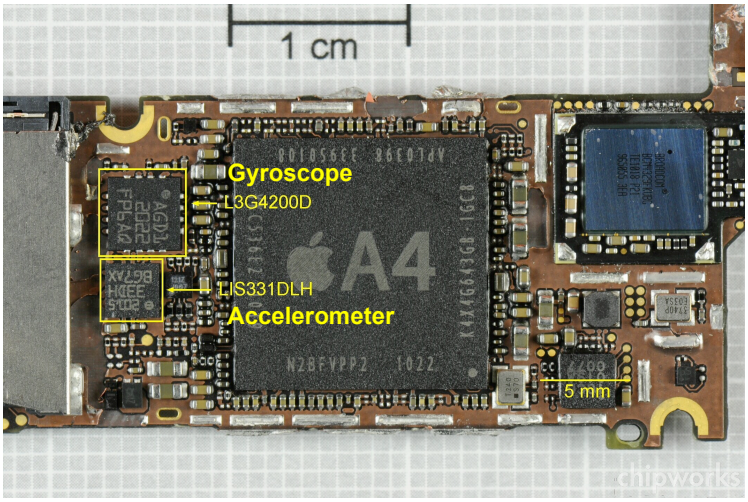

www.memsjournal.com/2010/12/motion-sensing-in-the-iphone-4-mems-accelerometer.html

Accelerometer in iPhone4

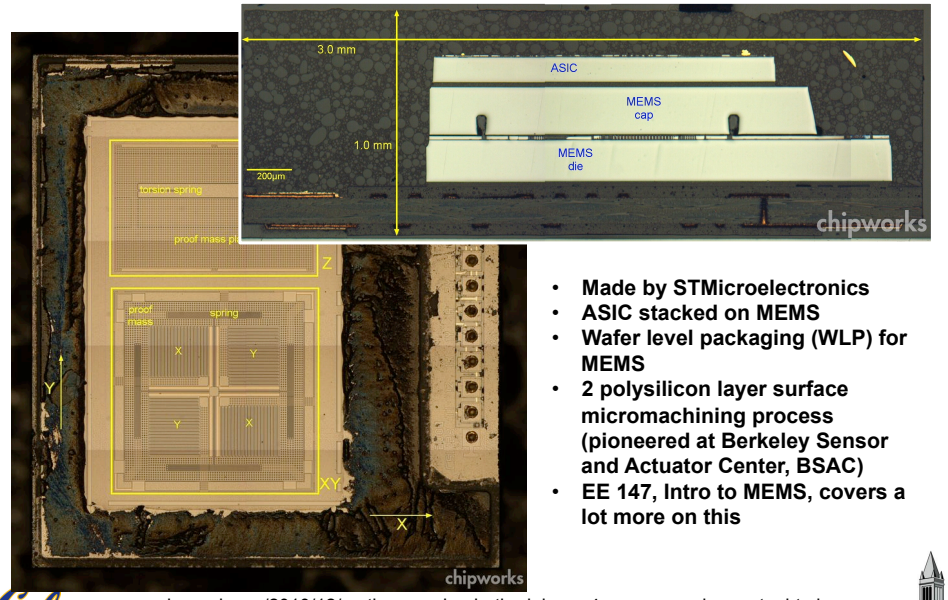

- Made by STMicroelectronics
- ASIC stacked on MEMS
- Wafer level packaging (WLP) for MEMS
- 2 polysilicon layer surface micromachining process (pioneered at Berkeley Sensor and Actuator Center, BSAC)
- EE 147, Intro to MEMS, covers a lot more on this

www.memsjournal.com/2010/12/motion-sensing-in-the-iphone-4-mems-accelerometer.html

17

Accelerometer in iPhone4

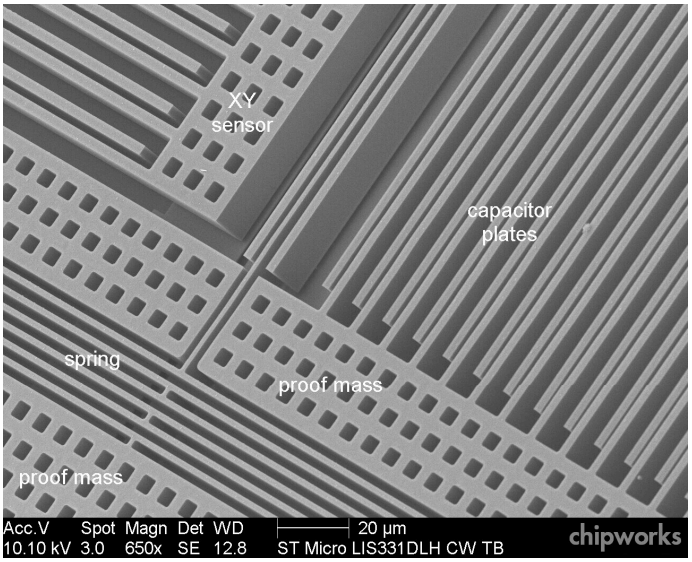

www.memsjournal.com/2010/12/motion-sensing-in-the-iphone-4-mems-accelerometer.html

18

Differential Capacitive Accelerometer

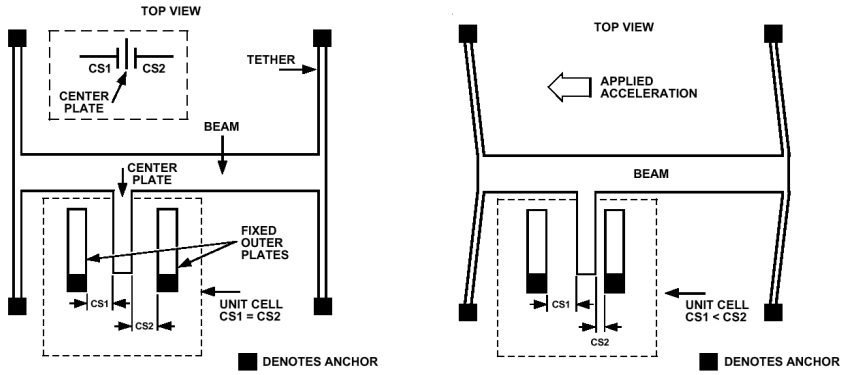

Differential Capacitive Sensing

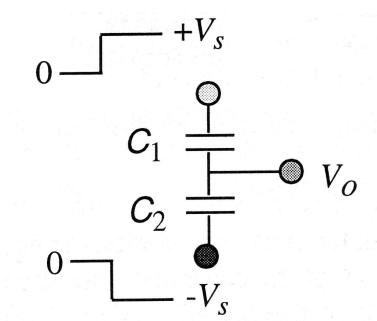

$$V_0 = -V_S + \frac{C_1}{C_1 + C_2} \cdot 2V_S$$

$$= \frac{C_1 - C_2}{C_1 + C_2} V_S$$

$$C_1 = C \frac{x_0}{x_0 + \delta x} \qquad C_2 = C \frac{x_0}{x_0 - \delta x}$$

For small displacement:

$$C_1 - C_2 = C\left(\frac{x_0}{x_0 + \delta x} - \frac{x_0}{x_0 - \delta x}\right)$$

$$= C \frac{-2x_0 \delta x}{x_0^2 - \delta x^2} \approx -C \frac{2}{x_0} \delta x$$

$$C_1 + C_2 \approx 2C$$

$$\boxed{V_0 \approx -\frac{\delta x}{x_0} V_S}$$

Output voltage is linearly proportional to the displacement

ADXL Block Diagram – Open Loop

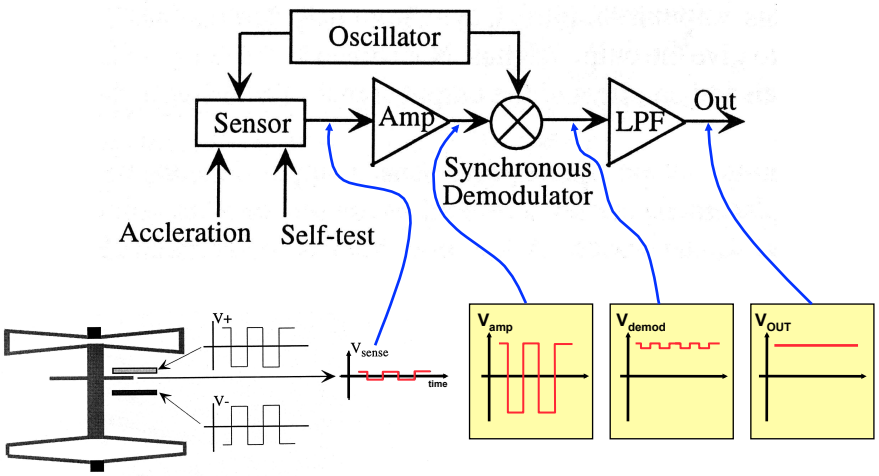

- Minimum detectable capacitance change: 20 aF (aF = 10^{-18}F)
- Minimum detectable displacement: 0.02 nm (1/5 of hydrogen atom)

What You Learned in EE40

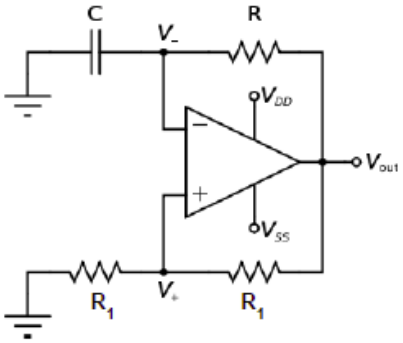

- Resistors, capacitors, inductors
- KCL, KVL
- Ideal OP Amp
- Time/frequency domain analysis
- Bode Plot

What You Will Learn in EE 105

Op Amp Circuit

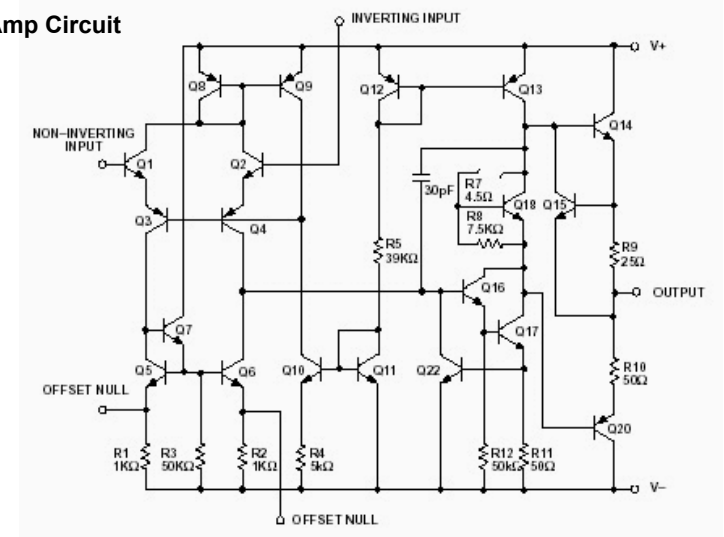

EECS 105 in the Grand Scheme

- **Example: Cell Phone**

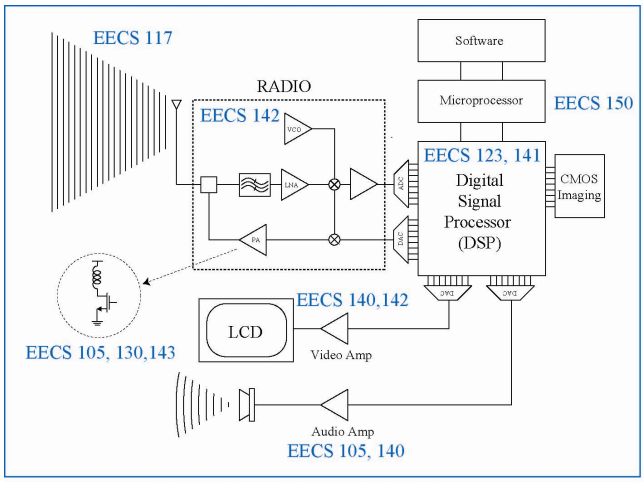

ENTIRE SYSTEM: EECS 120, 126, 121

Circuit Simulation

- SPICE (Simulation Program with Integrated Circuit Emphasis)
  - Developed at UC Berkeley!
  - Outgrowth of CANCER (Computer Analysis of Nonlinear Circuits, Excluding Radiation)
- We will use HSPICE in class (Read the Tutorial online)
- Many other versions of SPICE
  - LTSPICE free download from Linear Technology http://www.linear.com/designtools/software/#LTspice
  - However, GSIs will only focus on HSPICE, and answer questions related to HSPICE