EE 105 | Discussion 10

Kieran Peleaux & Qianyi Xie

Discussion Outline

- [Lab 5] Attenuation network
- [Homework 8] Problem 7 - Feedback Resistor
- [Exercises]

Attenuation Network

- Needs ***smaller*** input ***signal amplitude*** than the ***minimum*** amplitude of the ***function generator*** 50 mV
  - Gain of amplifier ~ **160V/V**
  - Swing of output ~ **$3V_{peak\text{-}peak}$**

$\Rightarrow$ 20 mV

Problem!

- Solution:
  - Insert an ***attenuation network***

$\boxed{a < 0.4}$

Need: $V_{out} = a \cdot V_{in}$

Attenuation Network

- Determining the input impedance

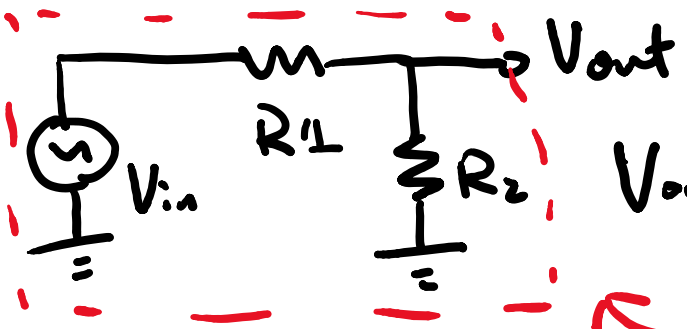

$$V_{out} = \frac{R_2}{R_1+R_2} \cdot V_{in}$$

Thevenin Equivalent

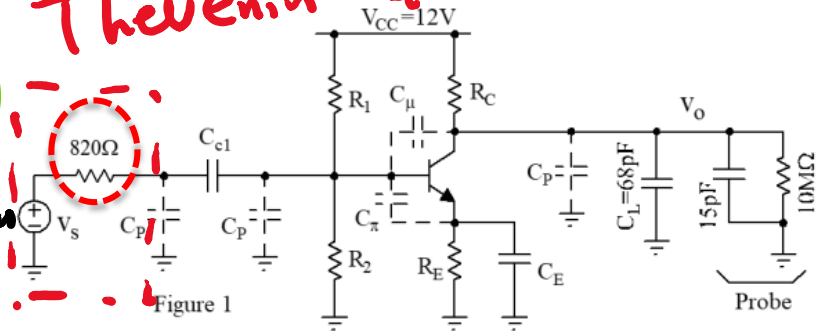

Figure 1

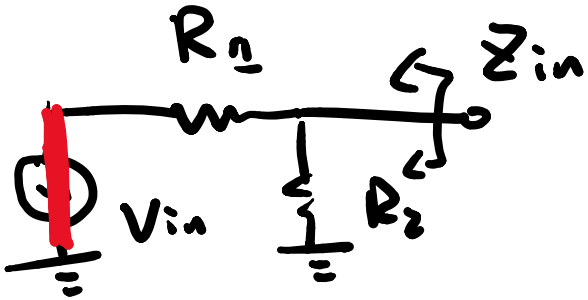

$$Z_{in} = R_1 // R_2 \Rightarrow \frac{R_1 R_2}{R_1+R_2} = 820\Omega$$

Don't forget the 50Ω of Func. Gen.!

Attenuation Network

- How to determine the gain of the amplifier
  - Measure the ***CORRECT*** input signal

DO NOT take V_atten as your input signal

DO take V1 as input, calculate the open-ckt V_atten, and use the open-ckt V_atten as input.

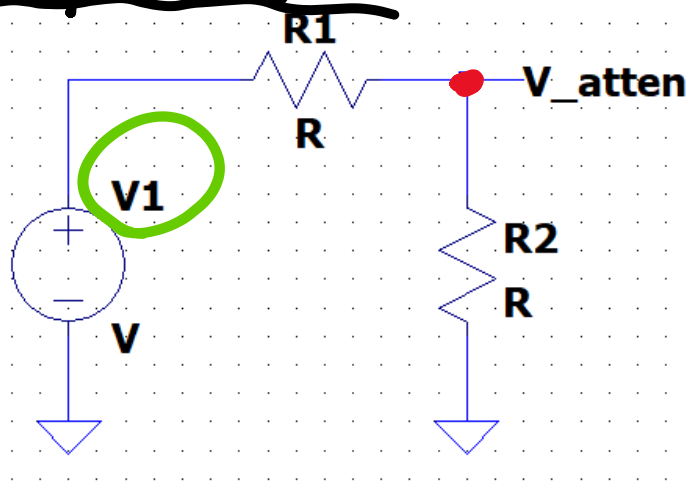

Reason: After connecting to the Amp. V_atten is loaded and is your V_{base}, but not V_s.

CE Amp w/ Feedback Resistor

- Impact of adding a feedback resistor
  - Change the Q-point
  - Change the small-signal gain

Open Ckt.

10MΩ vs. 10kΩ

DC bias point

AC gain

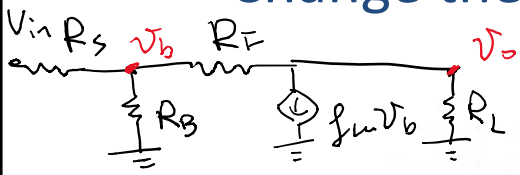

$$\begin{cases} \dfrac{v_o}{R_L} + g_m v_b + \dfrac{v_o - v_b}{R_F} = 0 \\ \dfrac{v_b - v_o}{R_F} + \dfrac{v_b}{R_B} + \dfrac{v_b - v_i}{R_S} = 0 \end{cases}$$

$$v_b = \frac{-\left(\frac{1}{R_L} + \frac{1}{R_F}\right)}{\left(g_m - \frac{1}{R_F}\right)} v_o \quad - ①$$

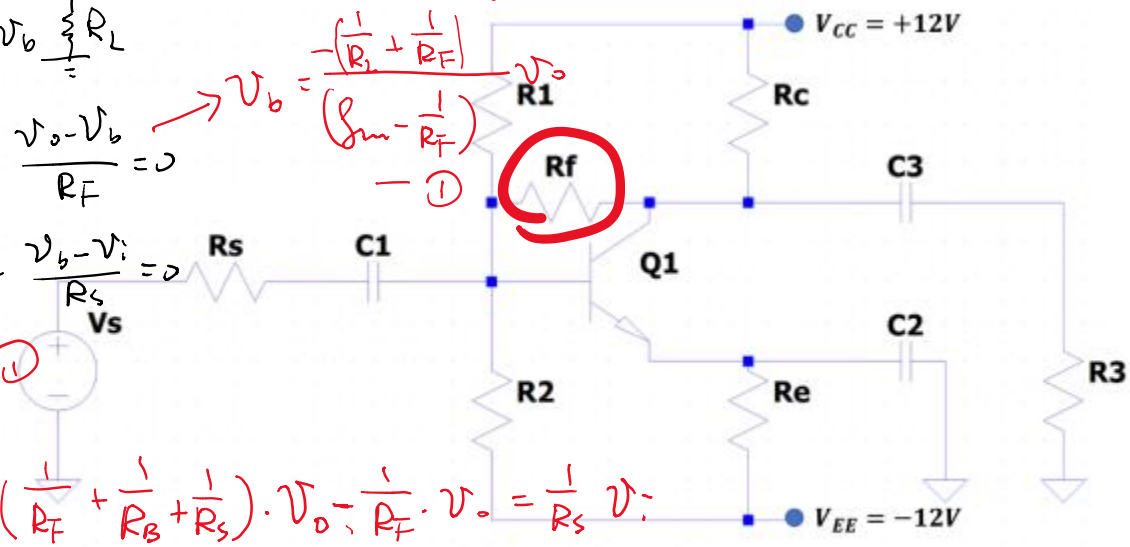

Figure PS8.1

$$-\left(\frac{1 + R_F/R_L}{g_m R_F - 1}\right) \cdot \left(\frac{1}{R_F} + \frac{1}{R_B} + \frac{1}{R_S}\right) \cdot v_o - \frac{1}{R_F} \cdot v_o = \frac{1}{R_S} v_i$$

$$\Rightarrow -\frac{v_i}{v_o} = \frac{R_S}{R_F} + \left(\frac{R_S}{R_F} + \frac{R_S}{R_B} + 1\right)\left(\frac{1 + R_F/R_L}{g_m R_F - 1}\right) \approx \frac{R_S}{R_F} \Rightarrow \boxed{\frac{v_o}{v_i} \approx -R_F/R_S}$$

Large

CE Amp w/ Feedback Resistor

- Common use of this circuit
  - Trans-Impedance Amplifier

$v_o \approx I_s \cdot R_F$

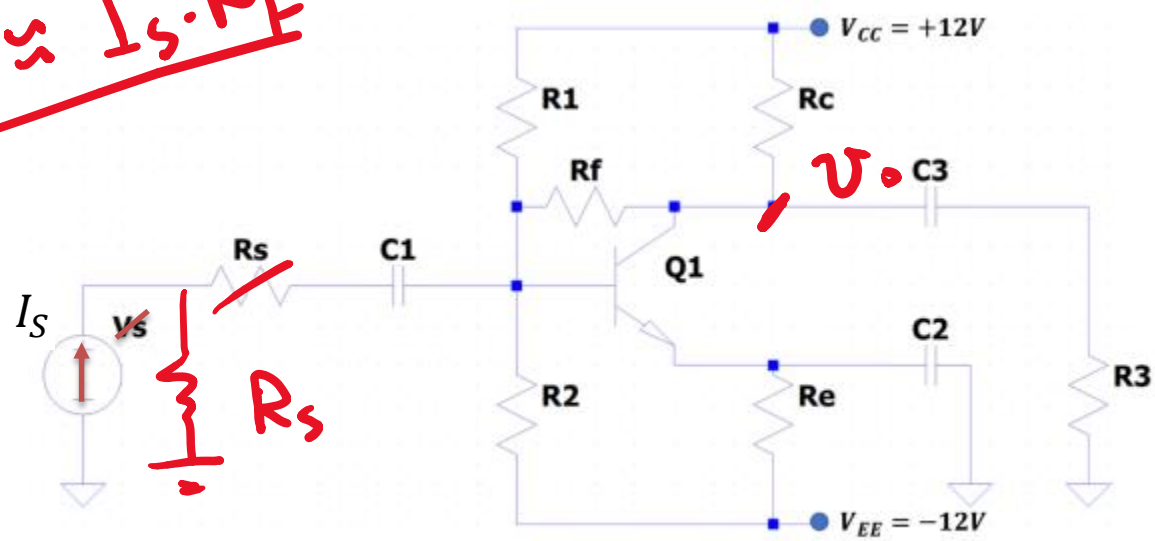

Figure PS8.1

Miller Effect

$$C_{in} = (1 - A_v) * C_{ft}$$

$$C \triangleq \frac{\Delta Q}{\Delta V} \Rightarrow C_{ft} = \frac{\Delta Q}{v_o - v_s}, \quad v_o \simeq -g_m \cdot r_o \cdot v_s = A_v \cdot v_s$$

$$\Delta Q = C_{ft} \cdot (v_o - v_s) = C_{ft} \cdot (1 - A_v) \cdot v_s$$

$$C_{eff} = \frac{\Delta Q}{\Delta V_{in}} = \frac{C_{ft} \cdot (1 - A_v) \cdot v_s}{v_s} = C_{ft} \cdot (1 - A_v)$$

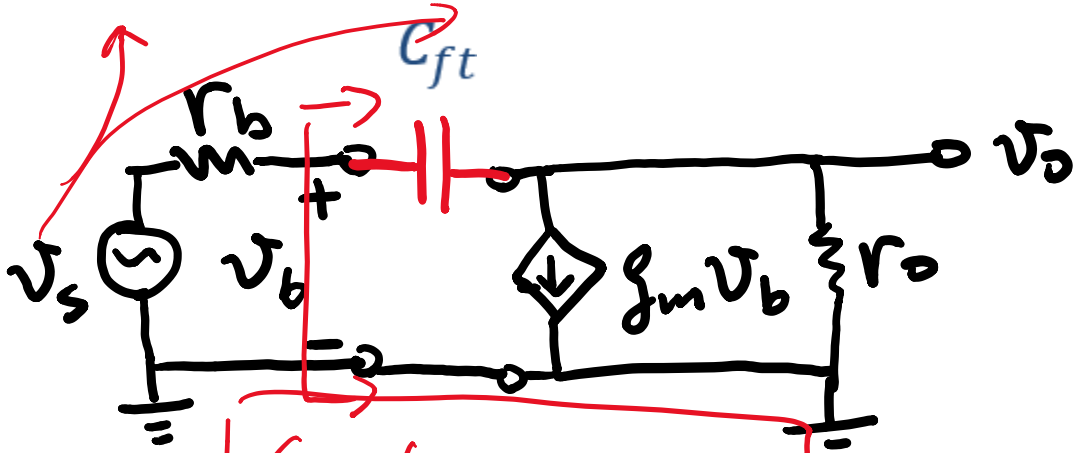

$$C_{in} = (1 + g_m r_o) C_{ft}.$$

Miller Effect

$$C_{in} = (1 - A_v) * C_{ft}$$

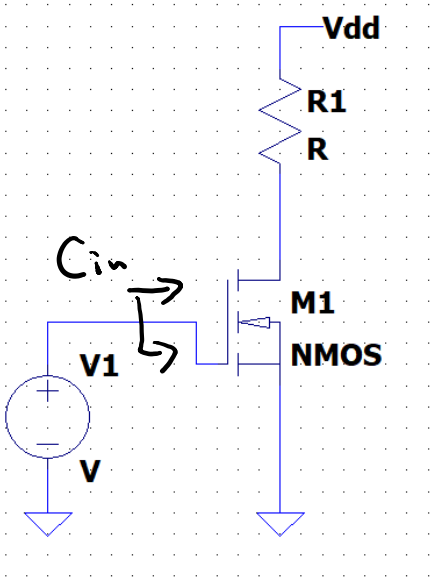

$$C_{in} = [1 + g_m(R_1 // r_o)]C_{gd} + C_{gs}$$

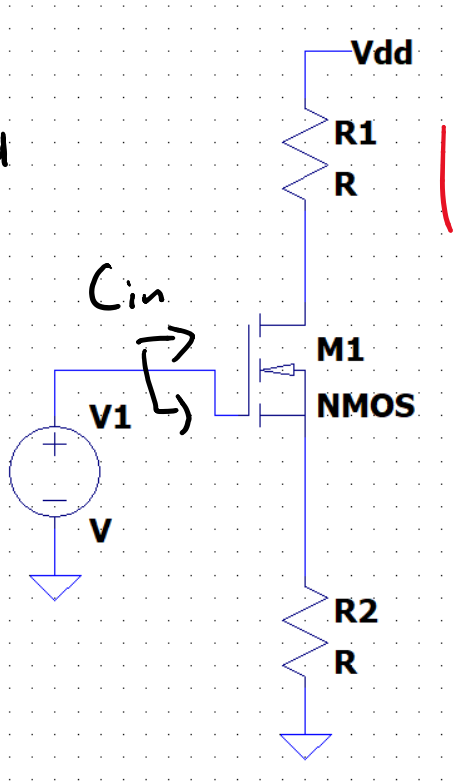

$$\boxed{C_{in} \approx 2C_{gd}}$$

Miller Effect

$$C_{in} = (1 - A_v) * C_{ft}$$

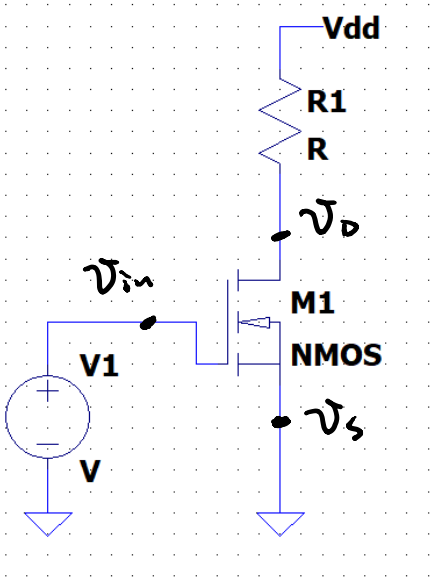

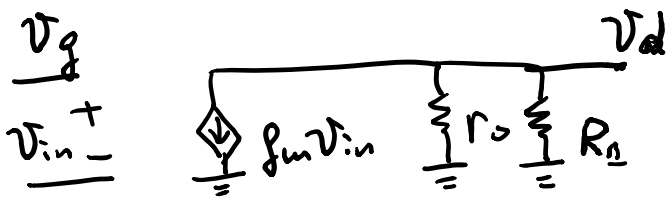

$$\Rightarrow v_d = -g_m (r_o // R_1) \cdot v_g$$

$$\Rightarrow C_{gd,eff} = (1 - A_{g\to d}) \cdot C_{gd} = [1 + g_m (r_o // R_1)] v_g$$

$$\simeq (1 + g_m R_1) v_g$$

$$v_s = 0 \Rightarrow A_{g\to s} = 0$$

$$\Rightarrow C_{gs,eff} = C_{gs}$$

$$\Rightarrow C_{in} = C_{gs} + C_{gd} \cdot (1 + g_m R_1)$$

Miller Effect

$$C_{in} = (1 - A_v) * C_{ft}$$

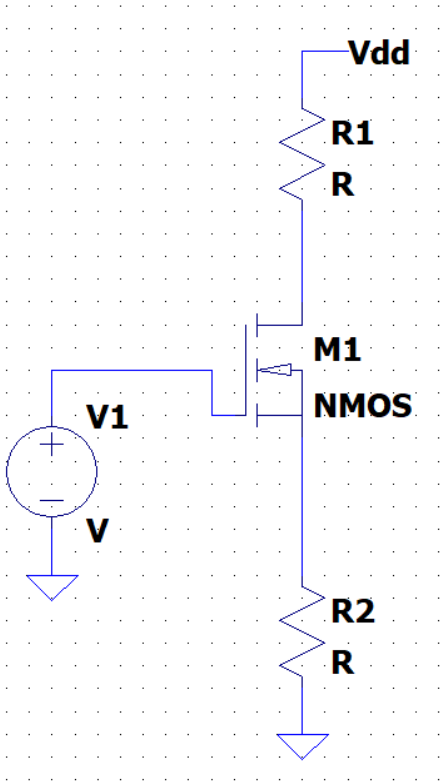

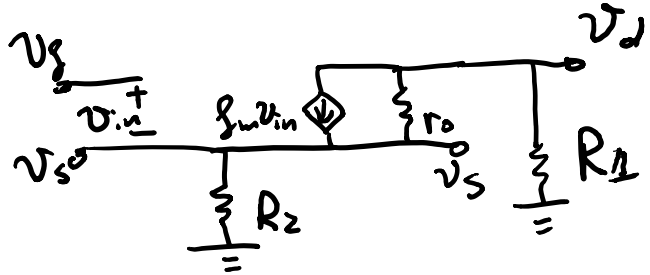

$$\Rightarrow \begin{cases} g_m \cdot (v_g - v_s) + \dfrac{v_d - v_s}{r_o} = \dfrac{v_s}{R_2} \\ \dfrac{v_d}{R_1} + \dfrac{v_d - v_s}{r_o} + g_m (v_g - v_s) = 0 \end{cases}$$

$$v_g = \left(1 + \frac{1}{g_m r_o} + \frac{1}{g_m R_2}\right) v_s - \frac{v_d}{g_m r_o} \quad - ①$$

$$v_d \cdot \left(\frac{1}{g_m R_1} + \cancel{\frac{1}{g_m r_o}}\right) - \cancel{v_s\left(1 + \frac{1}{g_m r_o}\right)} = -\left(\cancel{1 + \frac{1}{g_m r_o}} + \frac{1}{g_m R_2}\right) v_s + \cancel{\frac{v_d}{g_m r_o}}$$

$$\Rightarrow \quad v_d \cdot \frac{1}{g_m R_1} = -v_s \cdot \frac{1}{g_m R_2} \quad — *$$

Miller Effect

$$C_{in} = (1 - A_v) * C_{ft}$$

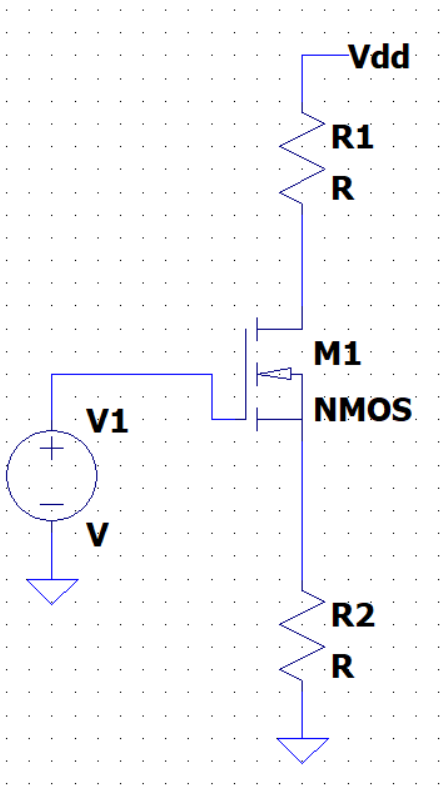

$$v_d \cdot \frac{1}{g_m R_1} = -v_s \cdot \frac{1}{g_m R_2} \quad * \quad \Rightarrow v_s = -\frac{R_2}{R_1} \cdot v_d$$

$$\frac{v_d}{R_1} + \frac{v_d - v_s}{r_o} + g_m (v_g - v_s) = 0$$

$$v_d \cdot \left(\frac{1}{g_m R_1} + \frac{1}{g_m r_o}\right) - v_d \cdot \left(-\frac{R_2}{R_1}\right) \cdot \left(1 + \frac{1}{g_m r_o}\right) = -v_g$$

$$\Rightarrow v_d \cdot \left[\underbrace{\frac{1}{g_m} \cdot \left(\frac{1}{R_1} + \frac{1}{r_o} + \frac{R_1}{r_o R_2}\right)}_{\text{small}} + \underbrace{\frac{R_2}{R_1}}_{\sim 1}\right] = -v_g$$

$$\Rightarrow \frac{v_d}{v_g} \simeq -\left(\frac{1}{g_m R_1} + \frac{R_2}{R_1}\right)^{-1} = \frac{-g_m R_1}{1 + g_m R_1 R_2}$$

$$C_{gd,eff} \simeq 2 C_{gd} \Leftarrow \simeq -1$$

Miller Effect

$$C_{in} = (1 - A_v) * C_{ft}$$

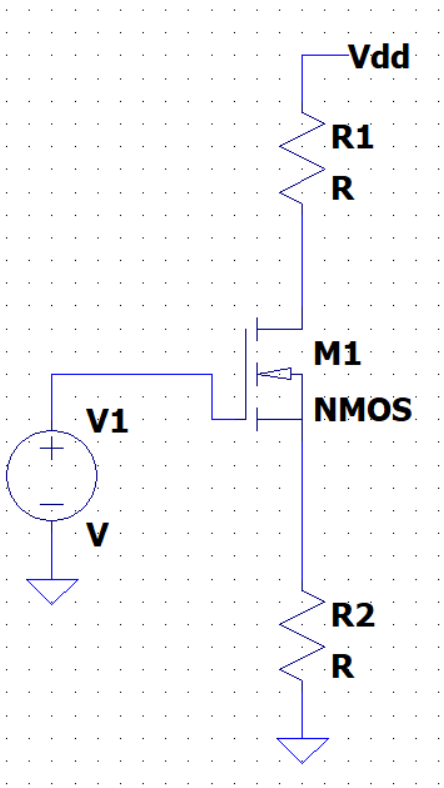

$$v_d \cdot \frac{1}{g_m R_1} = -v_s \cdot \frac{1}{g_m R_2} \quad * \quad \Rightarrow v_d = -\frac{R_1}{R_2} \cdot v_s$$

$$\frac{v_d}{R_1} + \frac{v_d - v_s}{r_o} + g_m (v_g - v_s) = 0$$

$$-v_s \cdot \left(1 + \frac{1}{g_m r_o}\right) - \frac{R_1}{R_2} v_s \cdot \left(\frac{1}{g_m R_1} + \frac{1}{g_m r_o}\right) = -v_g$$

$$\Rightarrow v_s \cdot \left(1 + \frac{1}{g_m r_o}\left(1 + \frac{R_1}{R_2}\right) + \frac{1}{g_m R_1}\right) = v_g$$

$$\Rightarrow \frac{v_s}{v_g} \simeq \left(1 + \frac{1}{g_m R_1}\right)^{-1} = \frac{g_m R_1}{1 + g_m R_1} \simeq 1$$

$$\Rightarrow C_{gs,eff} \simeq (1 - 1) \cdot C_{gs} = 0$$