EE 105 | Discussion 11

Kieran Peleaux & Qianyi Xie

Discussion Outline

- 4-Resistor Biased Transistors
- Small signal parameters
- High frequency performance & Device structures
- PNP BJT & PMOS
- Miller Capacitor

4-Resistor Biased Transistors

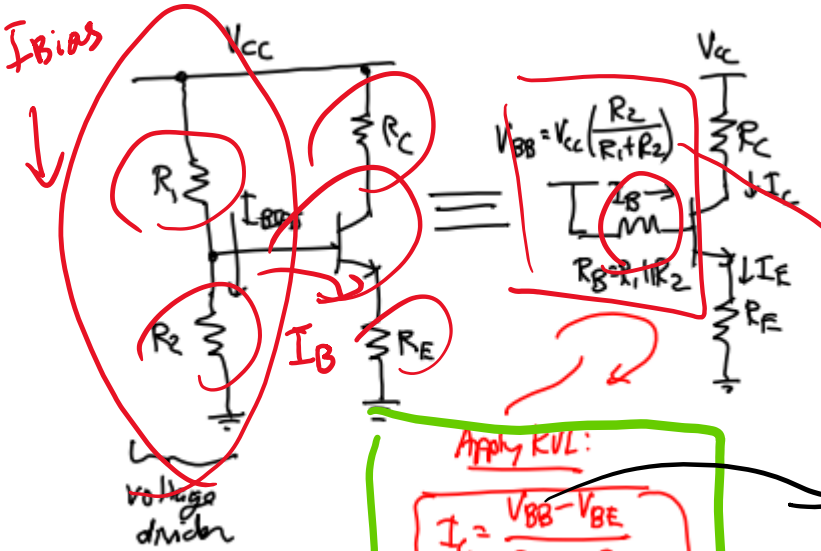

- Know how to ***derive*** all the currents and voltages within the circuit
- Know how properties of BJT ***affects*** the bias point
- Know ***small signal model***

$I_C = I_E - I_B$

$I_C = \beta I_B$

$V_{BE} = 0.7$

Apply KVL:

$$I_C = \frac{V_{BB} - V_{BE}}{\frac{R_E}{\alpha} + \frac{R_B}{\beta}}$$

$V_{BB} =$

$R_B = R_1 \| R_2$

F.A.

V_A

$$I_C = I_{S0} \cdot e^{\frac{V_{BE}}{V_T}} \cdot \left(1 + \frac{V_{CE}}{V_A}\right)$$

$$\alpha = \frac{\beta}{\beta + 1}$$

≈ 1

$$\beta = \frac{I_C}{I_B}$$

$$I_C = \frac{V_{BB} - V_{BE}}{\frac{R_E}{\alpha} + \frac{R_B}{\beta}}$$

Small R_B

Large R_E

$I_C \mid I_{Bias}$

4-Resistor Biased Transistors

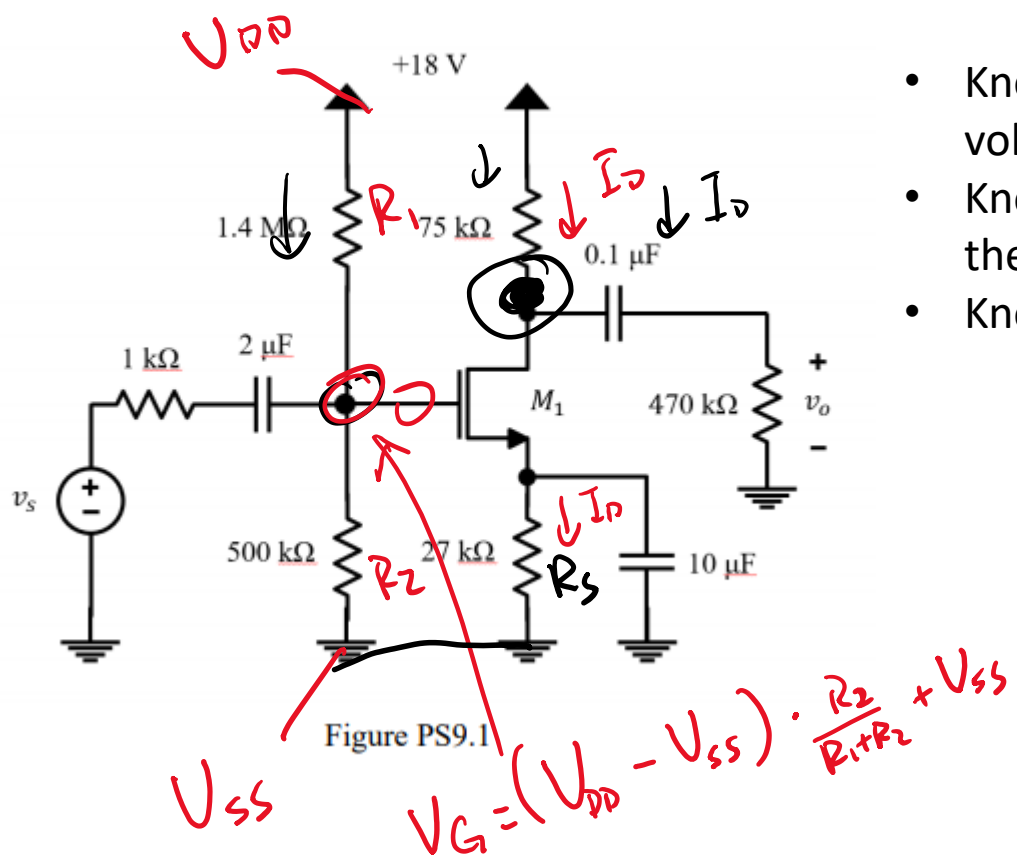

Figure PS9.1

- Know how to ***derive*** all the currents and voltages within the circuit
- Know how properties of MOSFET ***affects*** the bias point
- Know ***small signal model***

① I_D as the I flows thru Drain

② $I_D = \frac{1}{2}\mu_n C_{ox}\frac{W}{L} \cdot V_{ov}^2$

$(V_{GS} - V_{th})^2 \rightarrow (V_G - I_D R_S - V_{SS})$

I_{D1} I_{D2}

③ $V_{DS} > V_{ov}$ Check

Small signal model

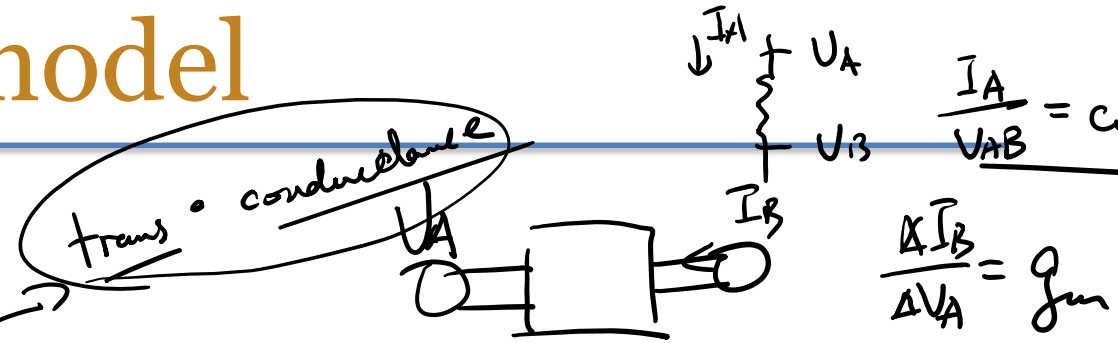

- Hybrid Pi model vs. T model
- MOSFET vs. BJT

- Know the derivation of g_m and r_o of a general device, or read them off given graphs
- Know the derivation of r_π, r_e, C_π, C_μ, C_{GS}, C_{DS}

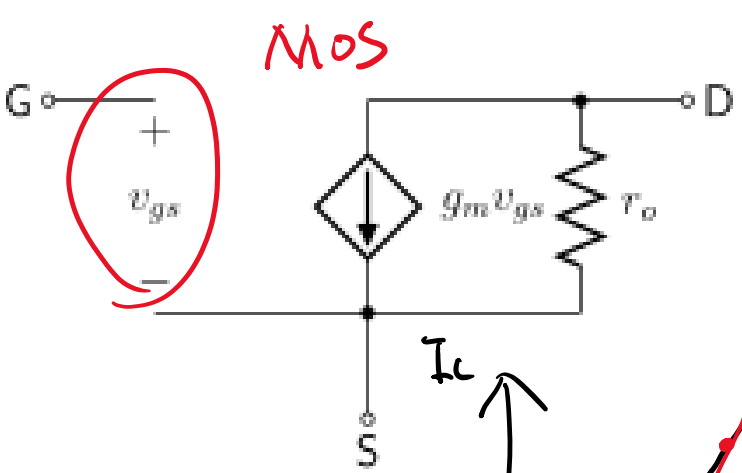

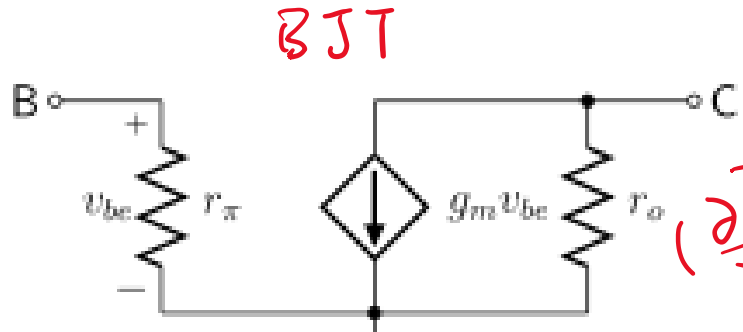

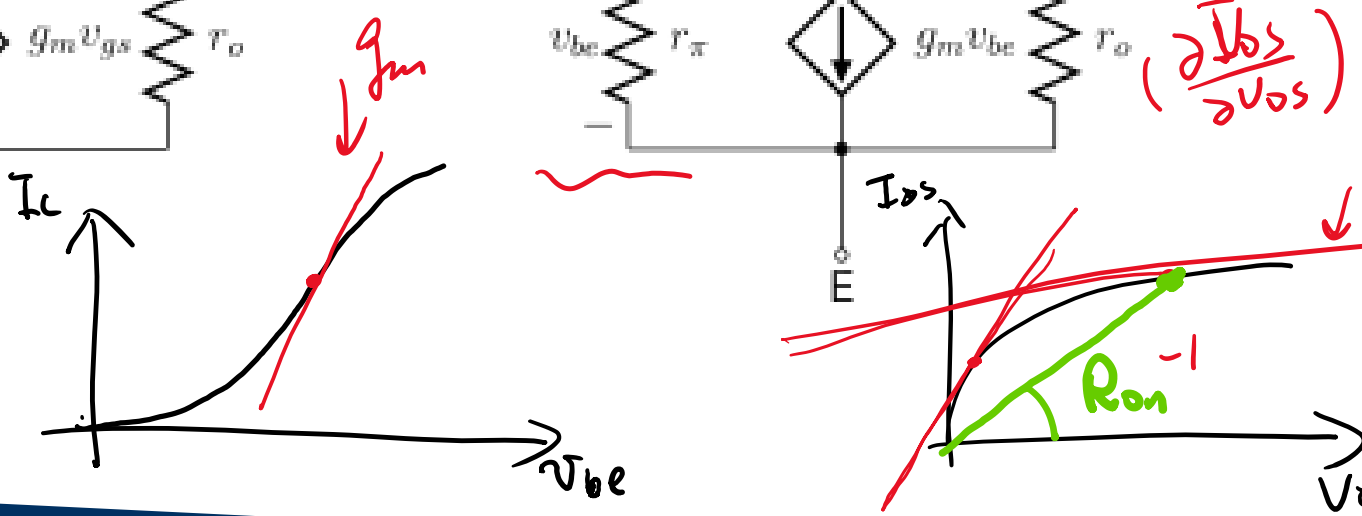

Small signal model

r_E

$v_{be} = i_B \cdot r_\pi$

H-π

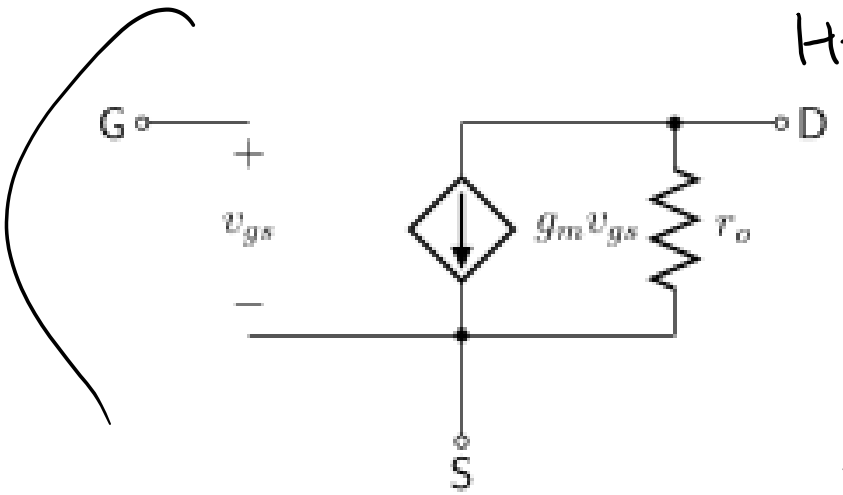

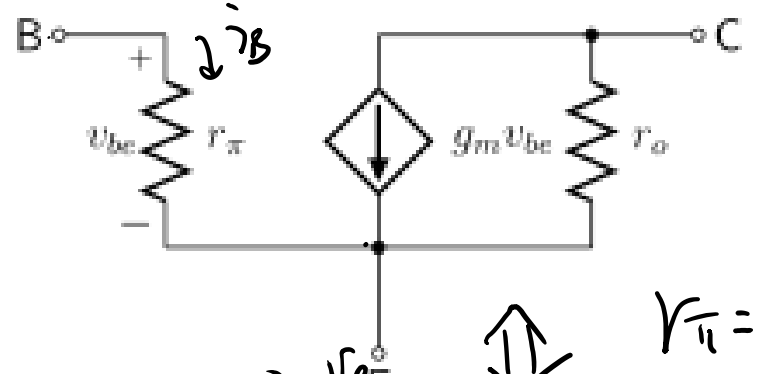

$r_e =$

$r_\pi = \beta / g_m$

r_e

T

$v_{be} = (i_b + \alpha i_e) \cdot r_e$

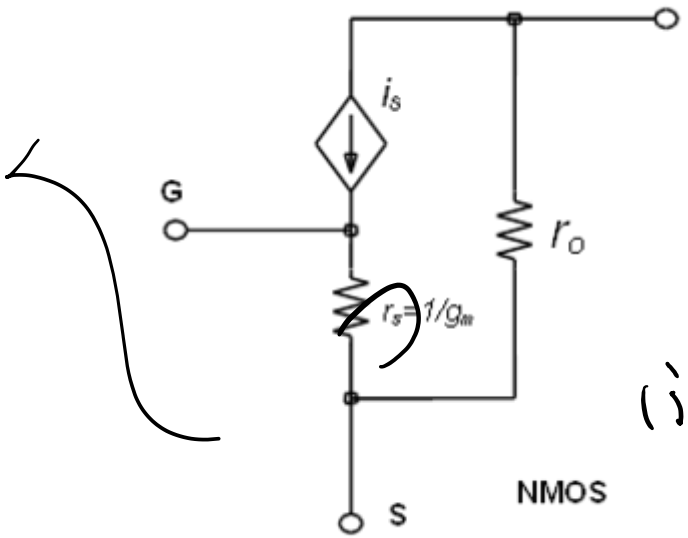

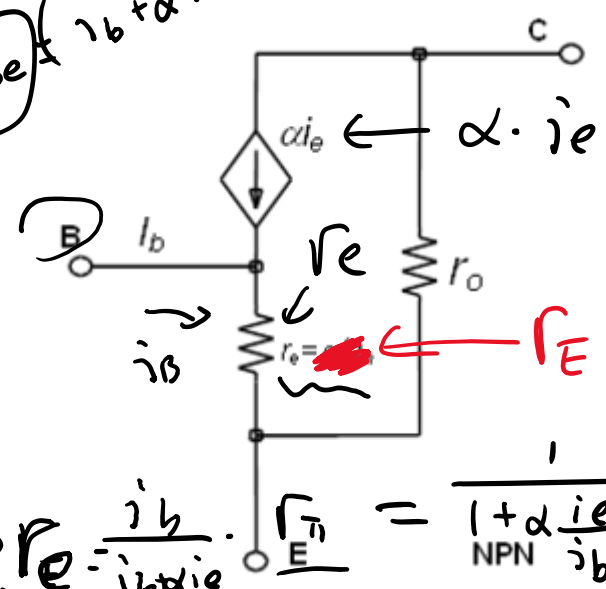

$\alpha i_e \leftarrow \alpha \cdot i_e$

$r_e =$

$r_E \neq r_\pi$

$(i_b + \alpha i_e) r_E = i_b \cdot r_\pi \Rightarrow r_e = \frac{i_b}{i_b + \alpha i_e} \cdot r_\pi = \frac{1}{1 + \alpha \frac{i_e}{i_b}} = \frac{1}{1 + \alpha \cdot (\beta}$

$\beta / \beta +$

High frequency performance & Device structures

Length Drawn

L_d

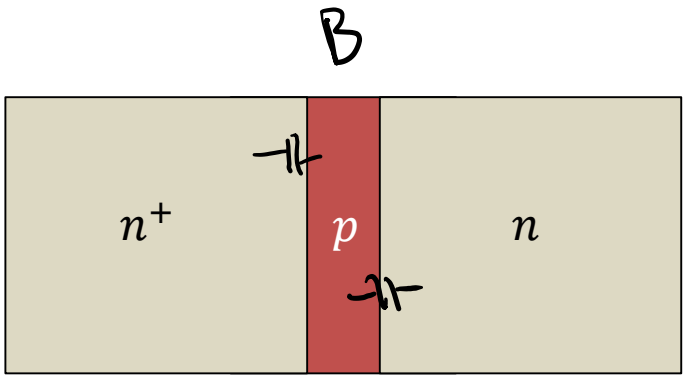

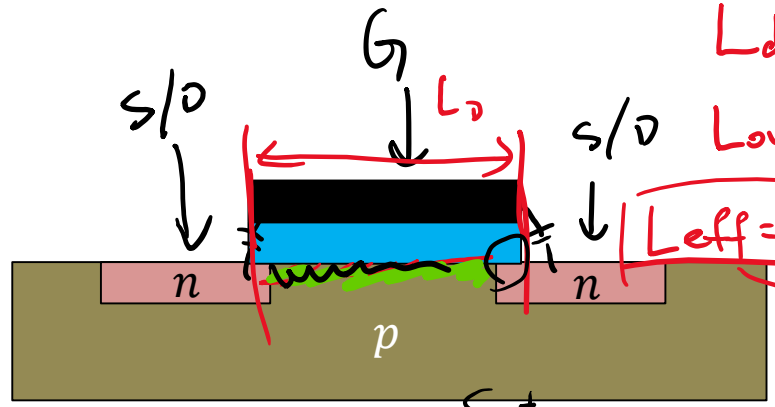

L_{ov}

$L_{eff} = L_d - 2$

Sat.

$C_{GS} = \frac{2}{3} W \cdot L_{eff}$

$C_{GD} =$

E

BJT

C

Forward Transition Time

MOSFET

$C_\pi = C_{je} + C_b = C_{je} + \boxed{g_m \cdot \tau_F}$

C_μ

C_{jc}

$$C_{je} = \frac{C_{je0}}{\left(1 + \frac{V_R}{\phi_{je}}\right)^m}$$

$$C_{jc} = \frac{C_{jc0}}{\left(1 + \frac{V_R}{\phi_{jc}}\right)^m}$$

m: 0.5

Lin. $C_{GS} = \frac{1}{2} W \cdot L_{eff}$

$C_{GD} = C_{GS}$

Complete Hybrid- PI model

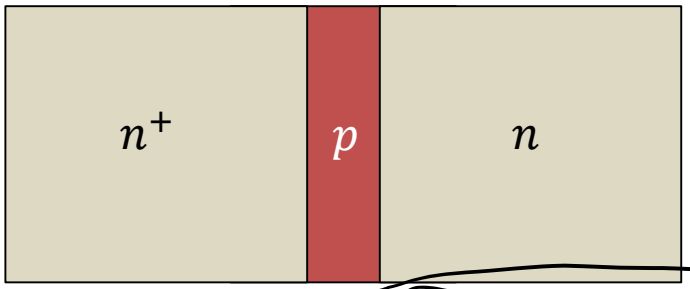

$I_C = \beta I_B$

ω_β

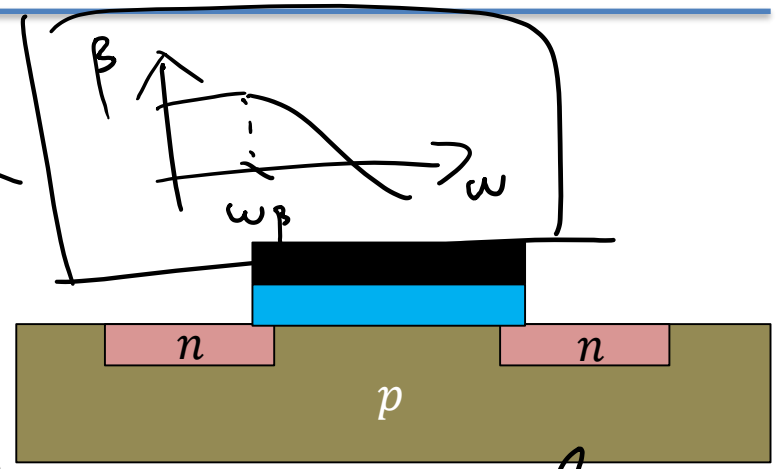

$$\omega_\beta = \frac{1}{r_\pi (C_\pi + C_\mu)}$$

$$\omega_T = \frac{g_m}{C_{GS} + C_{GD}}$$

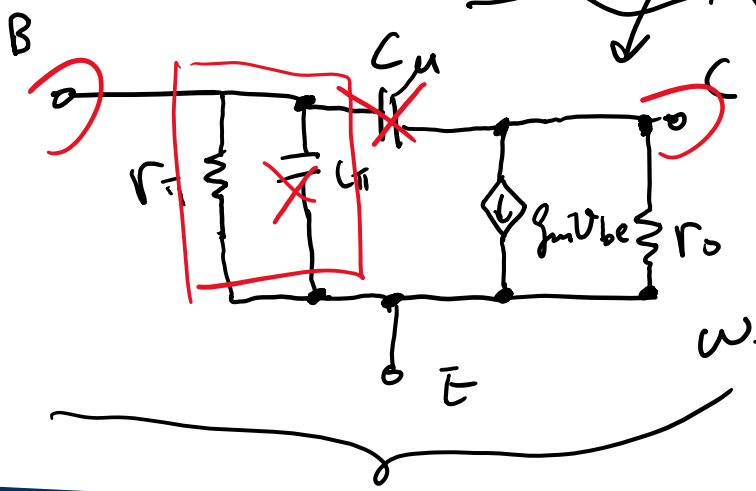

$$\omega_T = \frac{g_m}{C_\pi + C_\mu}$$

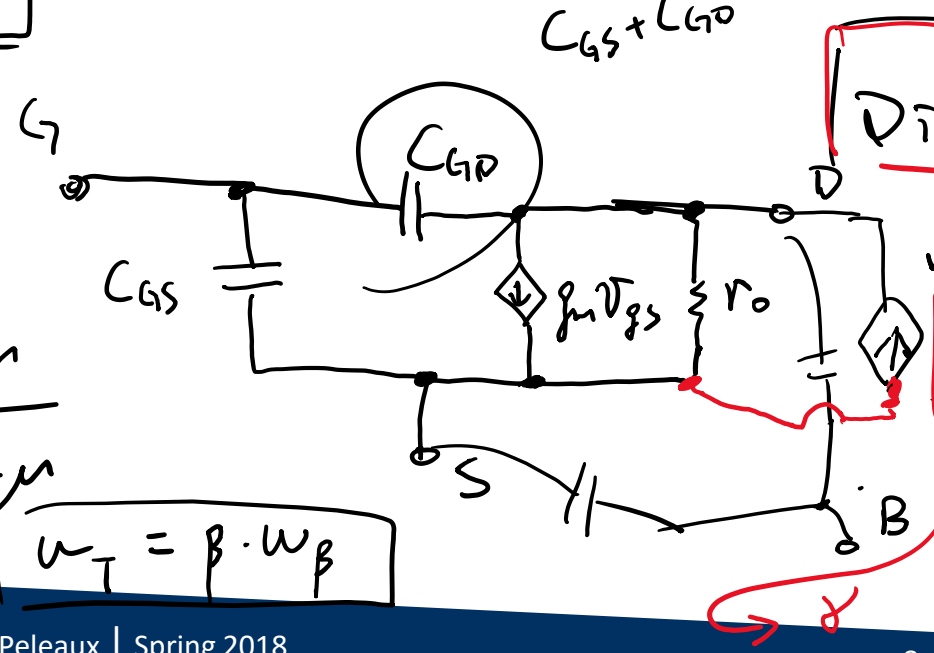

$$\omega_T = \beta \cdot \omega_\beta$$

OCTC & SCTC

$\omega_H = \frac{1}{\tau_H}$ or $\sum_{i=1}^{n} \frac{1}{\tau_i}$

Dominant

Non-dominant.

$\omega_L = \sum_{i=1}^{n} \omega_n$

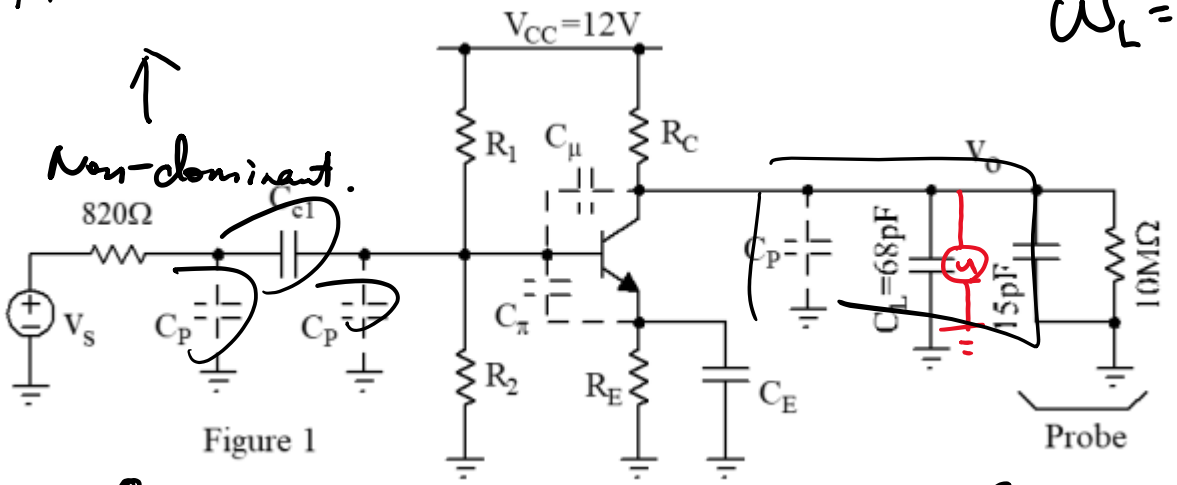

Figure 1

OCTC: High-freq
- Short Large Cap.
- Open small Cap.

Replace cap interested in w/ a test source.

Determine Req.

$\Longleftrightarrow$

SCTC: Low-freq
- Short Large Cap.
- Open small Cap.

Replace cap interested in w/ a test source.

Determine Req.

OCTC & SCTC

Exercise

$\beta = 200$
$V_A = 200V$

$K_P = 1mA/(V \cdot s)$
$V_{TP} = -3V$

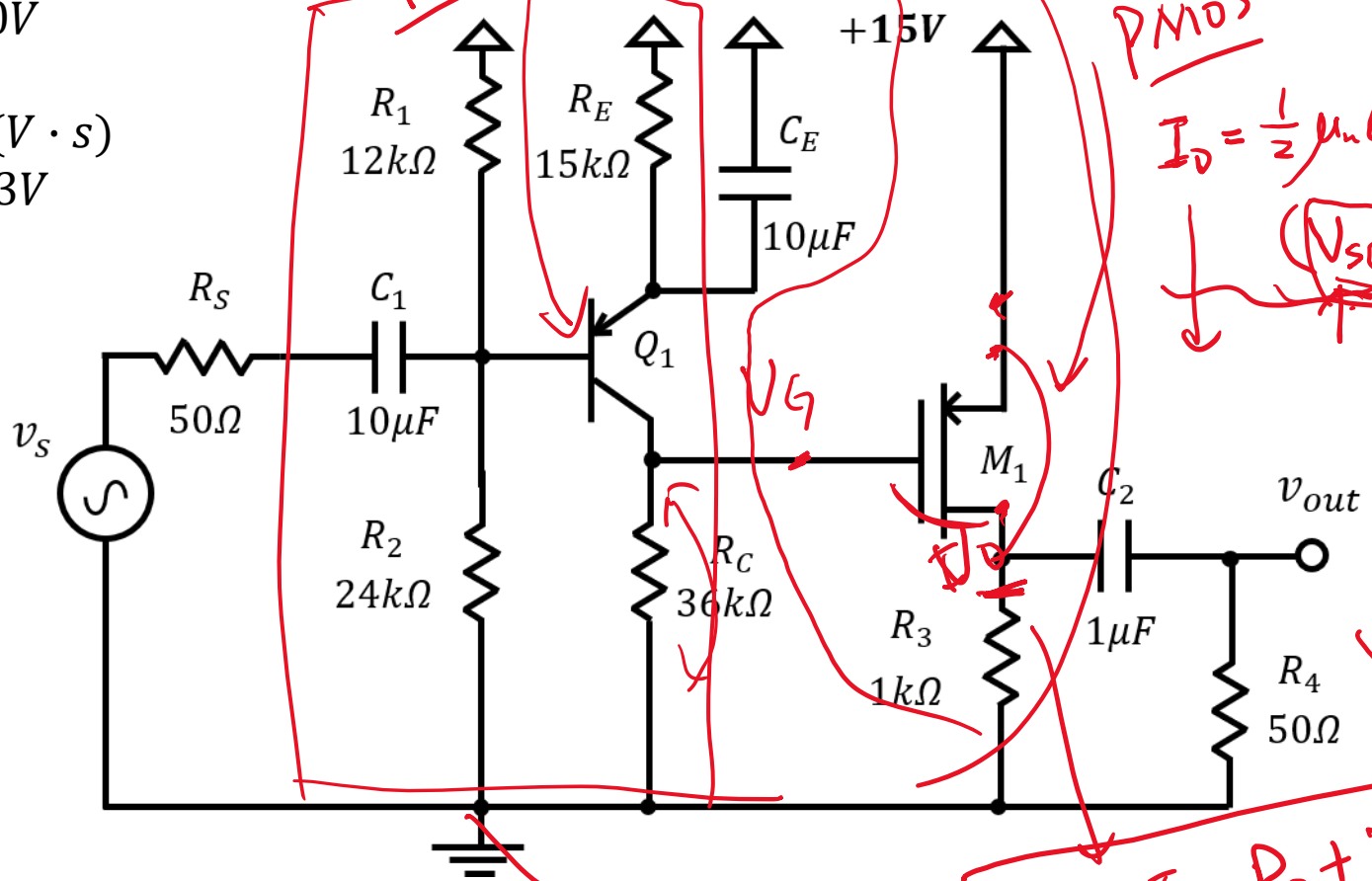

$V_G - V_D > V_{TP}$

PNP

PMOS

$I_D = \frac{1}{2}\mu_n C_{ox}\frac{W}{L}(V_{SG}+V_{TP})^2$

V_G

V_D

$V_{SD} > |V$

V_{SS}

$V_D = I_D \cdot R_3 + V_{SS}$

Exercise

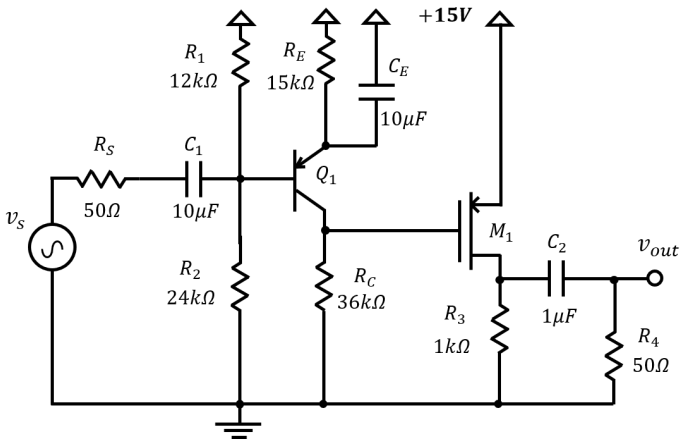

$$\beta = 200$$
$$V_A = 200V$$

$$K_P = 1mA/(V \cdot s)$$
$$V_{TP} = -3V$$

$$\frac{v_G}{v_S} = -g_{m1}(r_o // R_C) \cdot \frac{r_\pi // R_B}{r_\pi // R_B + R_S}$$

$$\frac{v_D}{v_G} = -g_{m2}(r_o // R_L)$$

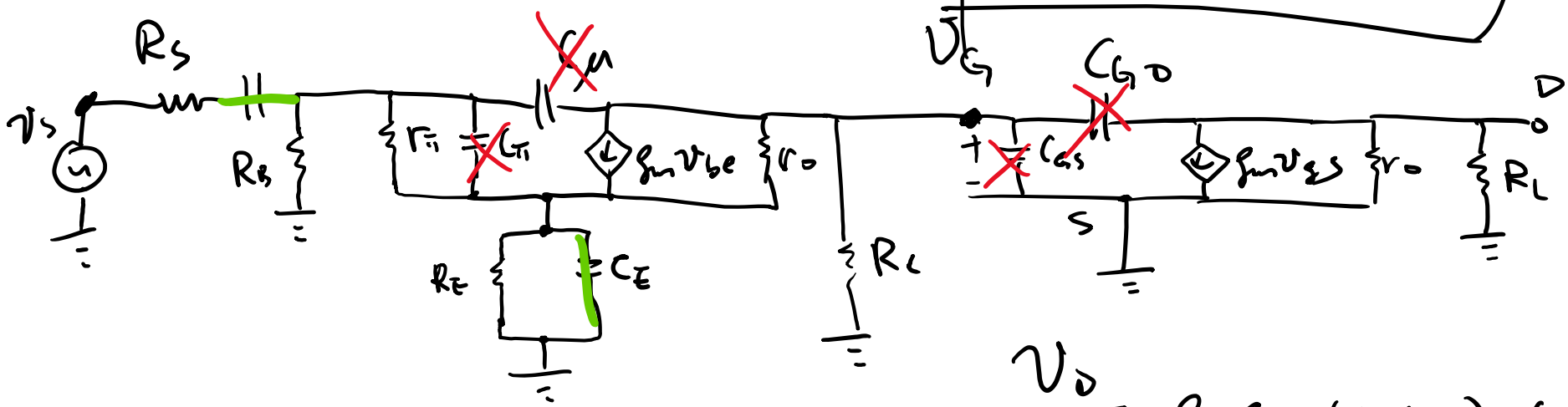

$$\frac{v_D}{v_S} = g_{m1} g_{m2} \cdot (r_{o1} // R_C) \cdot (r_{o2} // R_L) \cdot \frac{r_\pi // R_B}{\ldots}$$

Exercise

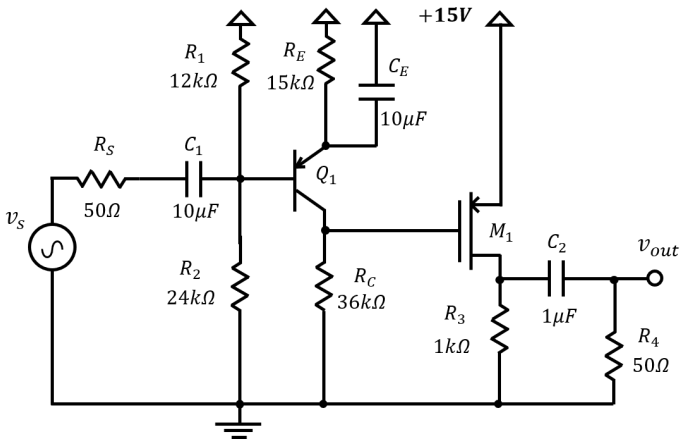

$$L_d = 10\mu m,\ L_{ov} = 1\mu m,\ W = 100\mu m$$
$$C_{OX} = 1fF/\mu m^2$$

$$C_{jc,0} = 4pF,\ C_{je,0} = 4pF,\ \tau_F = 200ps$$
$$\varphi_{jc} = 0.8V,\ \varphi_{je} = 0.9V$$

Inspection Analysis

$R_p = R_1 // R_1 // R_2$

$\frac{v_b}{v_s} = \frac{R_p}{R_p + R_s}$

$\frac{v_c}{v_s} = -g_{m1} R_c$

$-g_{m1} R_L$

$g_{m1} g_{m2} \cdot \frac{R_p}{R_p + R_s} \cdot R_c - R$

$R_c // R_{in}$ — *

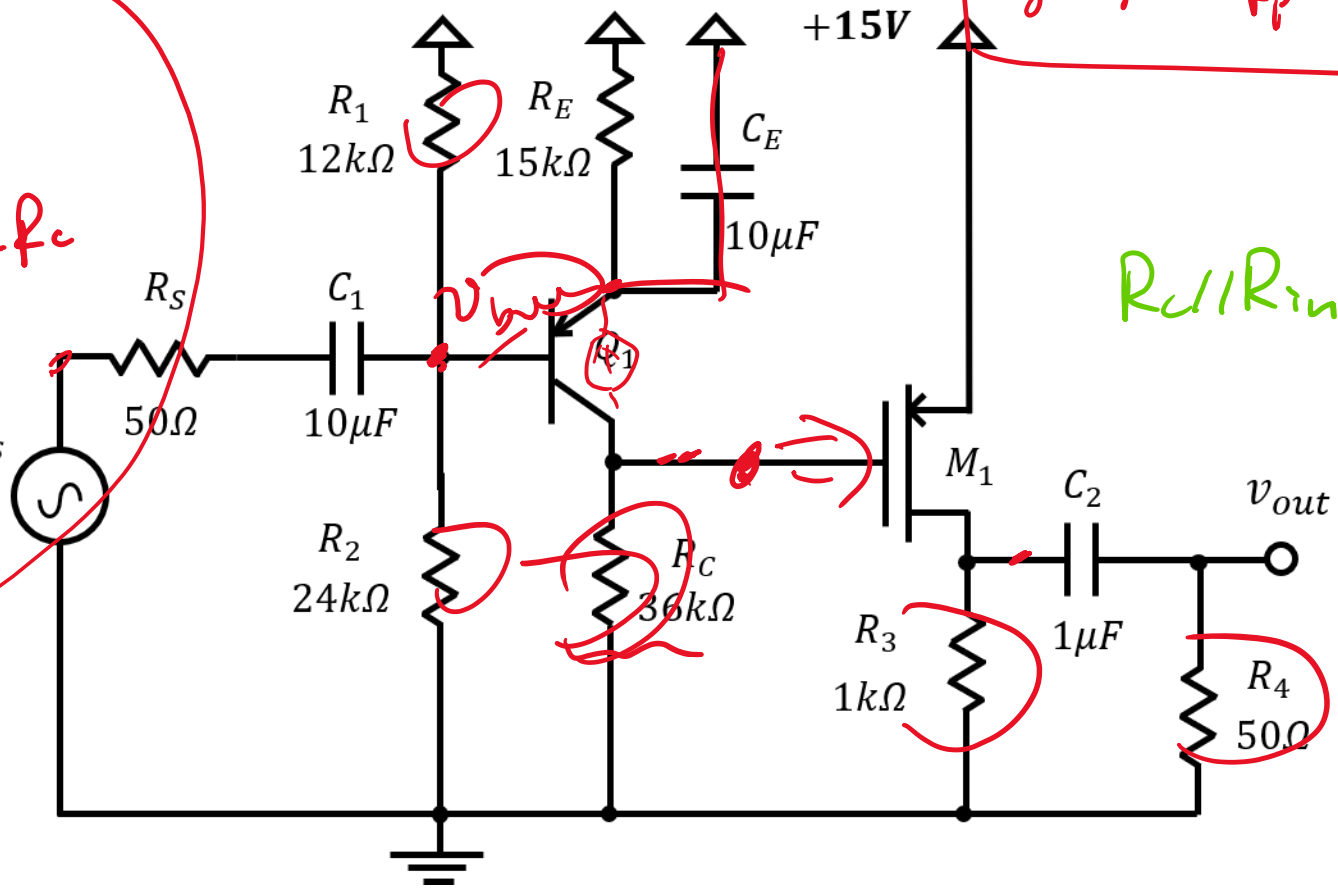

Miller Capacitor