EE 105 | Discussion 8

Kieran Peleaux & Qianyi Xie

Discussion Outline

- Review HW7, Problem 7
- Low-frequency pole analysis for CE amplifier
- Project questions?

Homework 7, Problem 7

- *Given:* $y_{11} = \frac{\partial i_B}{\partial v_{BE}}\Big|_{\text{Q-point}} = \frac{I_C}{\beta_{ac} V_T}$, *show* $\frac{I_B}{V_{BE}} = \frac{I_c}{\beta V_{BE}} \approx \frac{g_m}{\beta} = \frac{I_c}{\beta V_T}$

$$\beta_{ac} = \frac{\beta_{DC}}{\left[1 - I_C\left(\frac{1}{\beta_{DC}}\frac{\partial \beta_{DC}}{\partial i_c}\right)_{\text{Q-point}}\right]}$$

But why do we even have a small-signal (vs. DC) β?

From 2N3904 Datasheet

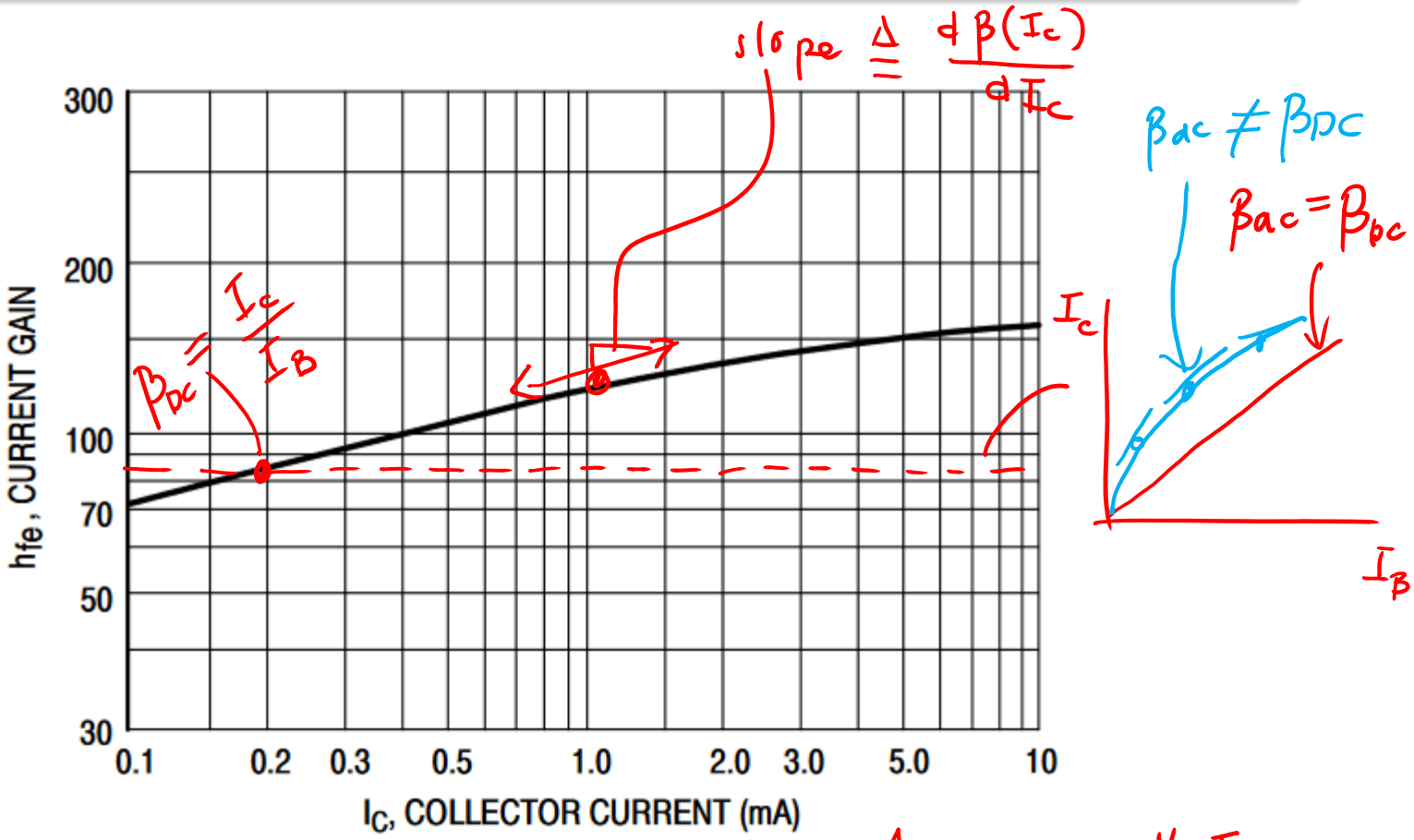

Figure 11. Current Gain

Across small I_c range, h_{fe} (or β) is ~ constant

Homework 7, Problem 7

- *Given:* $y_{11} = \frac{\partial i_B}{\partial v_{BE}}\Big|_{\text{Q-point}} = \frac{I_C}{\beta_{ac} V_T}$, *show* $\beta_{ac} = \frac{\beta_{DC}}{\left[1 - I_C\left(\frac{1}{\beta_{DC}}\frac{\partial \beta_{DC}}{\partial i_C}\right)_{\text{Q-point}}\right]}$

$$\frac{\partial\left(i_C/\beta_{DC}\right)}{\partial v_{BE}}\Bigg|_{Q\text{-pt.}} = \left[\frac{1}{\beta_{DC}}\frac{\partial i_C}{\partial v_{BE}} + i_C\left(-\frac{1}{\beta_{DC}^2}\cdot\frac{\partial \beta_{DC}}{\partial v_{BE}}\right)\right]_{Q\text{-pt.}}$$

$$= \left[\frac{1}{\beta_{DC}}\frac{\partial i_C}{\partial v_{BE}} - \frac{i_C}{\beta_{DC}^2}\left(\frac{\partial \beta_{DC}}{\partial i_C}\cdot\frac{\partial i_C}{\partial v_{BE}}\right)\right]_{Q\text{-pt.}} = \frac{1}{\beta_{DC}}\frac{\partial i_C}{\partial v_{BE}}\left[1 - \frac{i_C}{\beta_{DC}}\left(\frac{\partial \beta_{DC}}{\partial i_C}\right)\right]_{Q\text{-pt.}}$$

$$\left\{\frac{\partial i_C}{\partial v_{BE}} \triangleq g_m = I_C/V_T\right\}$$

$$= \frac{I_C}{\beta_{DC} V_T}\left[1 - \frac{i_C}{\beta_{DC}}\left(\frac{\partial \beta_{DC}}{\partial i_C}\right)\right]_{Q\text{-pt.}}$$

$$\therefore \beta_{ac} = \frac{\beta_{DC}}{\left[1 - I_C\left(\frac{1}{\beta_{DC}}\cdot\frac{\partial \beta_{DC}}{\partial i_C}\right)\right]}$$

$\beta_{ac} = \beta_{DC}$ if $\frac{\partial \beta_{DC}}{\partial i_C} = 0$

CE Amplifier: Low-freq. Pole

For freqs. ≈ f_H (short caps > 1nF, leave the rest)

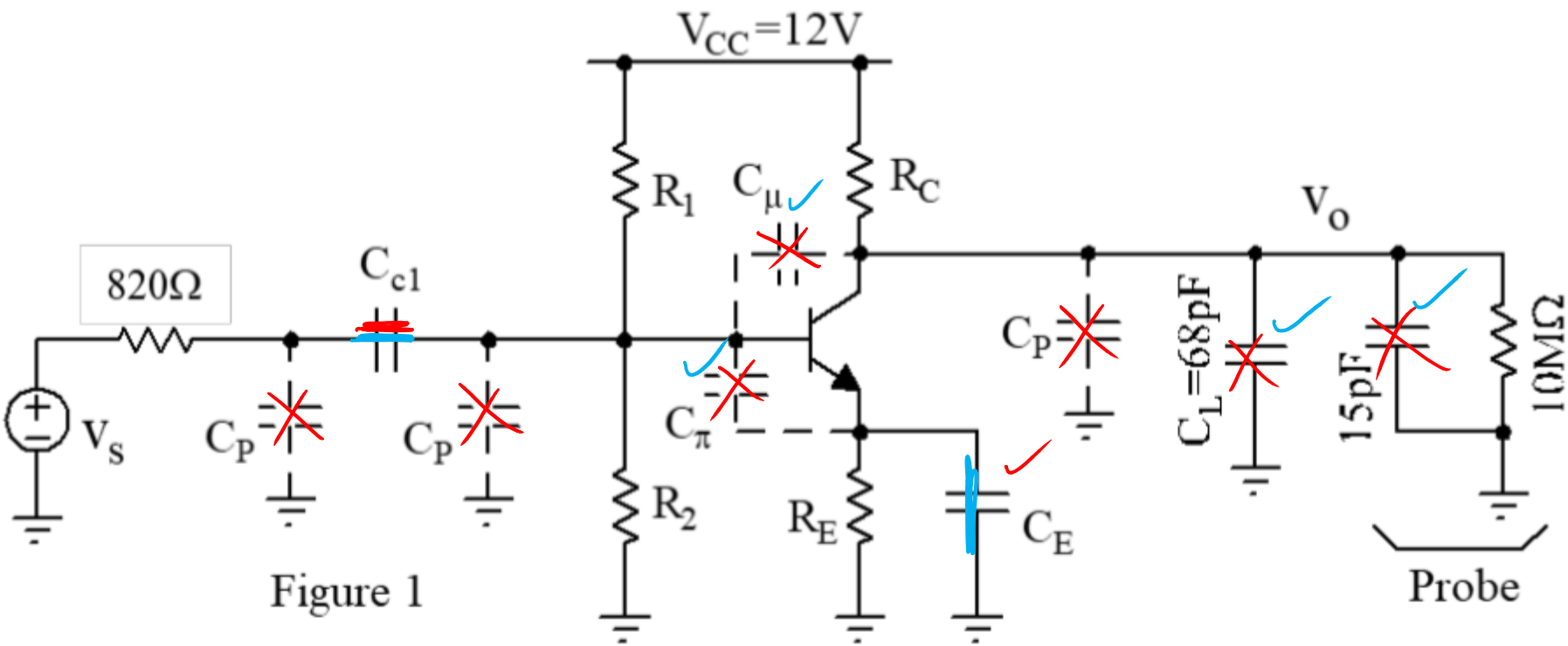

Figure 1

For freqs. ≈ f_L (short caps > 50μF (C_{c1}), open < 1μF, leave the rest)

SS model: Low-freq. Pole

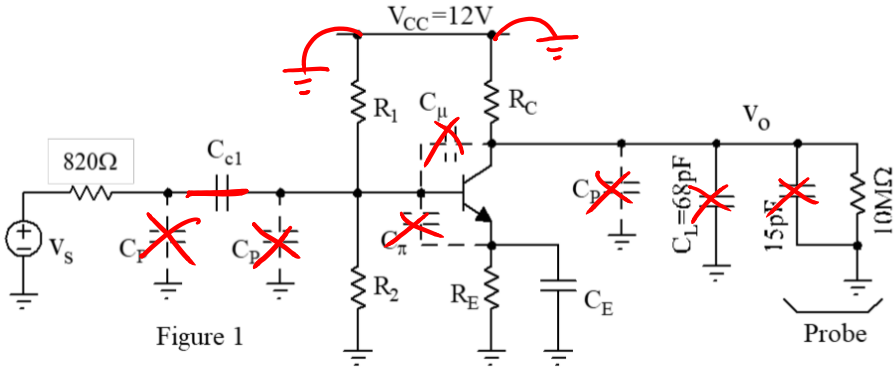

Figure 1

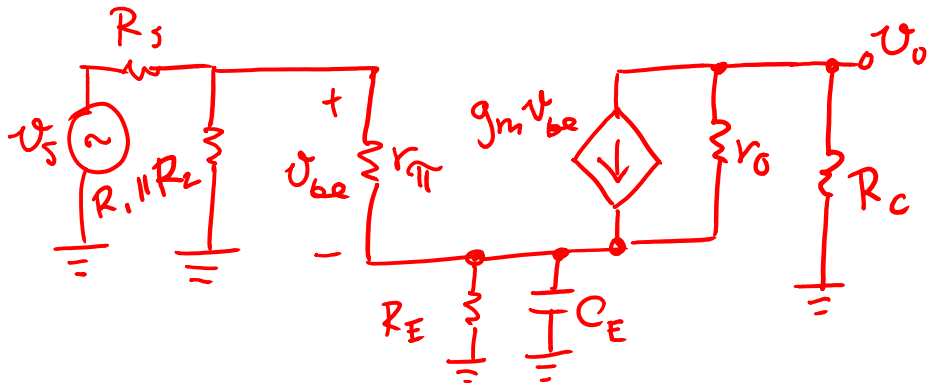

OCTC:

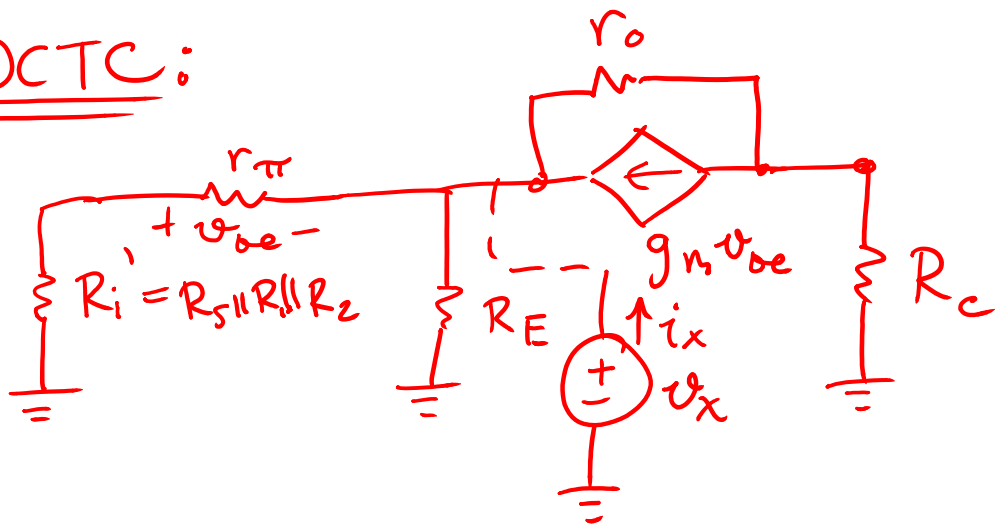

Find $\frac{v_x}{i_x} = R_{EO}$

$$\omega_{PL} = \frac{1}{R_{EO} \cdot C_E}$$

SS model: Low-freq. Pole (cont.)

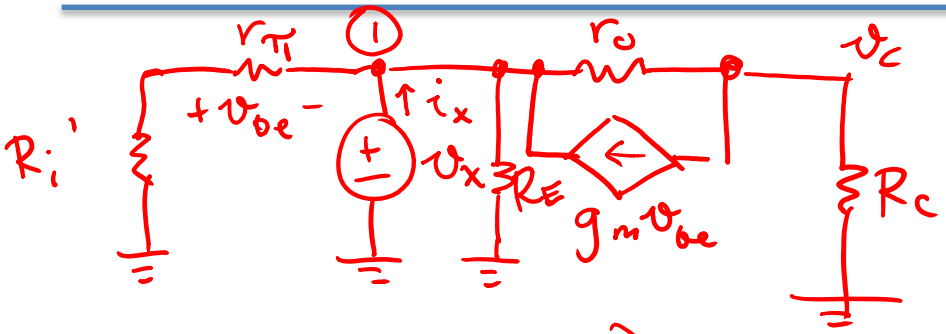

(1) $$i_x = \frac{v_x}{r_\pi + R_i'} + \frac{v_x}{R_E} - g_m v_{be} + \frac{(v_x - v_c)}{r_o}$$

$$v_{be} = \left(\frac{v_x}{r_\pi + R_i'} r_\pi \right) \quad (2)$$

$$\frac{v_c}{R_c} = \frac{(v_x - v_c)}{r_o} - g_m v_{be} \quad (3)$$

$$\omega_{pL} = \frac{1}{R_{EO} C_E}$$

$$f_L = \frac{\omega_{pL}}{2\pi} = \frac{i_x}{v_x C_E} \cdot \frac{1}{2\pi}$$

$$R_{EO} = \frac{v_x}{i_x}$$