EE 105 | Discussion 1

Kieran Peleaux & Qiutong Jin

Discussion Outline

- Ideal op-amp review
- Amplifier models
- Laplace domain transfer functions
- Fourier Series demo

Ideal Op Amps

- 3-terminal device (something's missing from this symbol though!)
- Follows a set of rules
  1. $v^+ = v^-$
  2. $i^+ = i^- = 0$
  3. $v_o = A_v(v^+ - v^-)$ <u>no matter what the load is</u>

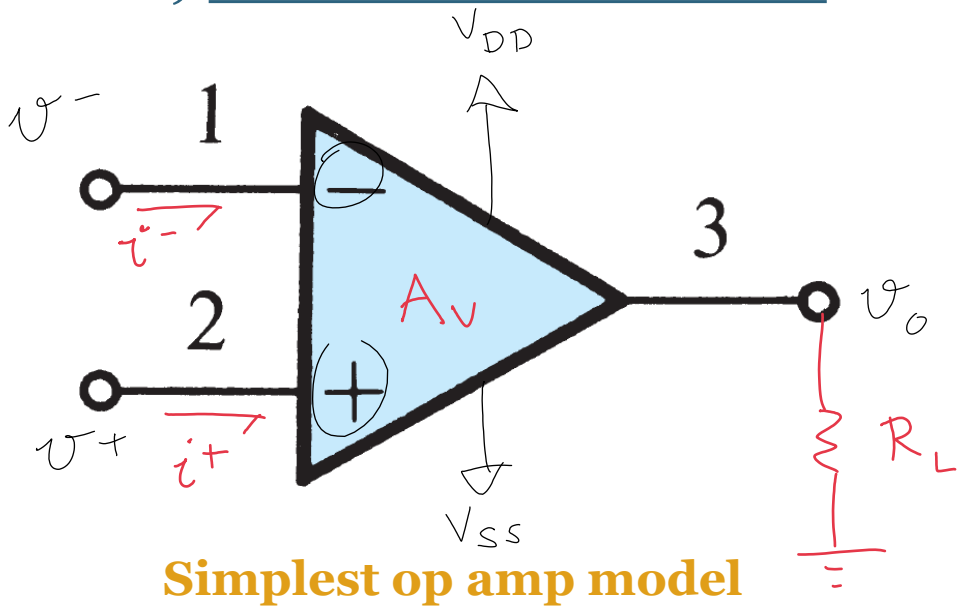

Simplest op amp model

Ideal Op Amps

- Where do these rules come from?
- Derive from a different set of rules
  1. $A = \infty$
  2. $R_i^- = R_i^+ = \infty$
  3. $R_{out} = 0$

$v^+ = v^-$

$v_o = A(v^+ - v^-)$ → only true if op amp is in negative feedback

finite ∞ 0

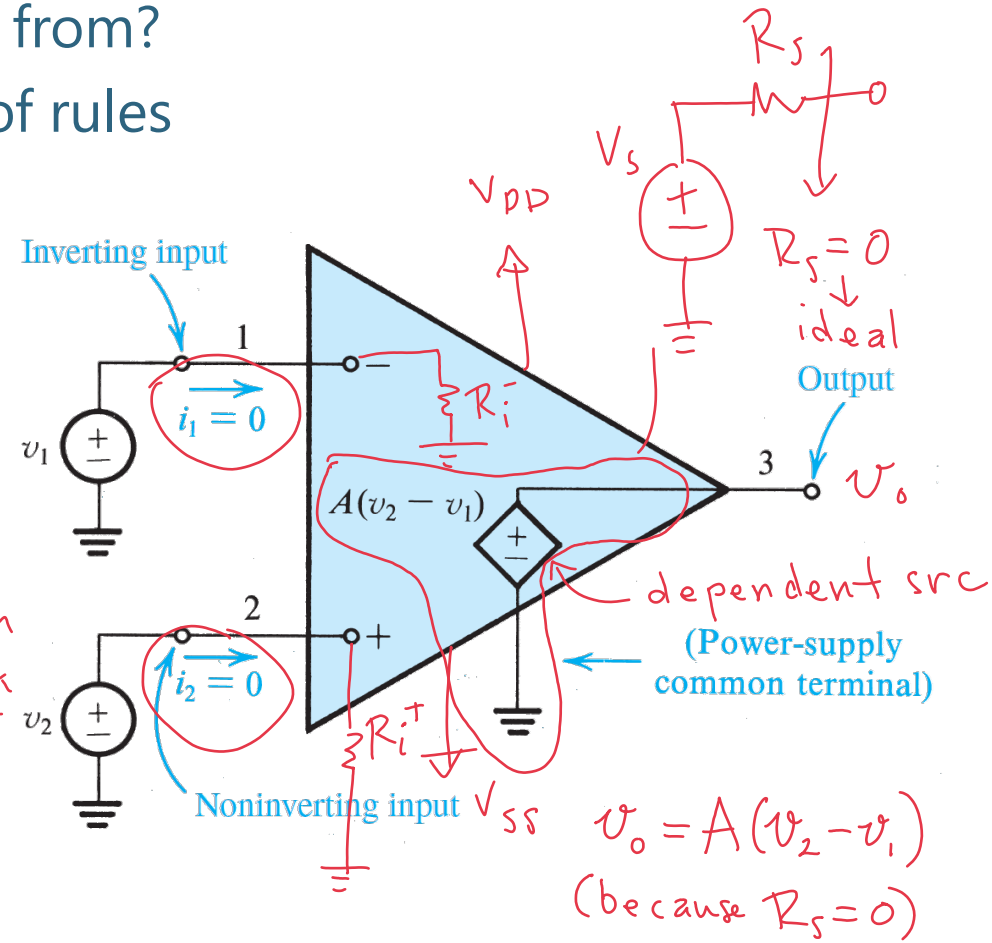

Equivalent circuit of ideal op amp

Amplifier Models

- All amplifier models need 3 parameters specified
  - Gain (voltage, current, power) (unitless, e.g. V/V or A/A or W/W)
  - Input resistance
  - Output resistance

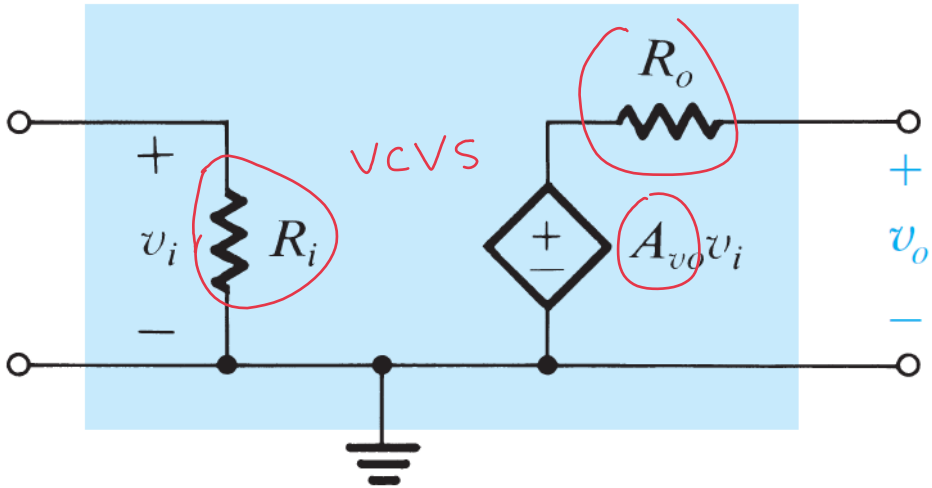

Voltage amplifier model

transimpedance gain

(units of $\frac{V}{A}$ (Ω))

Analyzing Amplifier Models

- Consider the model shown below (what's been added?)
  - $A_{vo} = 100$ V/V
- Find the <u>overall</u> voltage gain, v_o/v_s when:
  1. $R_i = 10R_s$, $R_L = 10R_o$
  2. $R_i = R_s/10$, $R_L = R_o/10$

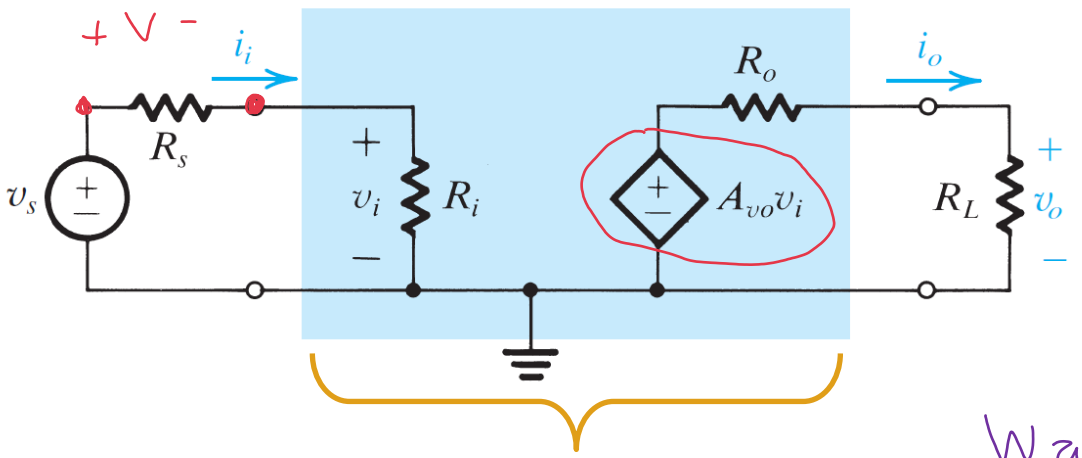

Voltage amplifier model

open-ckt. voltages

ideally, we want $R_s \ll R_i$

① $v_i = \frac{R_i}{R_i + R_s} v_s \xrightarrow{R_s \to 0} \frac{v_i}{v_s} = \frac{R_i}{R_i} = 1$

$v_o = \frac{R_L}{R_L + R_o} A_{vo} v_i = \frac{R_L}{(R_L+R_o)} \frac{R_i}{(R_i+R_s)} A_{vo} v_s$

$\frac{v_o}{v_s} = \frac{R_L}{(R_L+R_o)} \frac{R_i}{(R_i+R_s)} A_{vo}$

Want $R_i > R_s$ & $R_L > R_o$

as $R_i \to \infty$ & $R_o \to 0$ $\Rightarrow \frac{v_o}{v_s} \approx A_{vo}$

Deriving Amplifier Models

- How do we find the parameters below if not given?
  - Gain (voltage, current, power) → We will learn this soon!
  - Input resistance
  - Output resistance

  } Recall Thévenin equivalent circuits!

1. "Turn off" all independent sources (short-circuit voltage sources, open-circuit current sources)
2. Apply a test voltage source, v_x to the node of interest
3. Analyze the circuit to determine the current drawn from the test source, i_x in terms of v_x
4. Equivalent resistance is then: $R_{eq} = v_x/i_x$

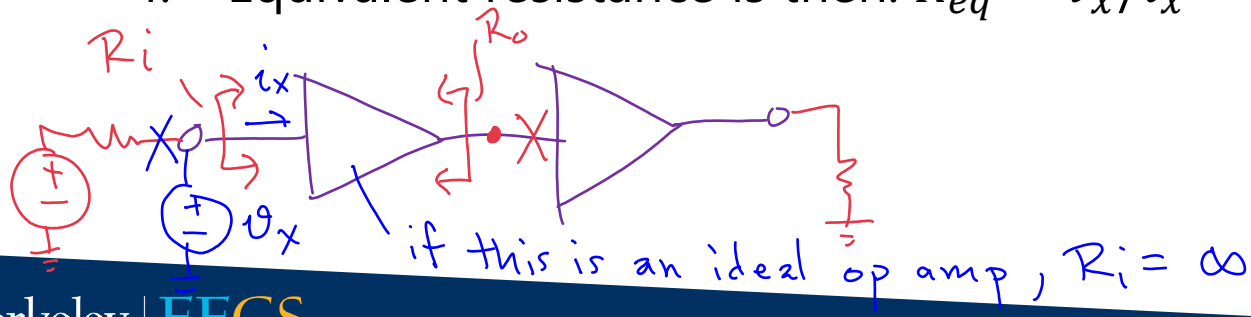

Finding R_i & R_o

- Find the input resistance, output resistance and voltage gain of the ideal op amp circuit below

$$i_x = \frac{v_x - v^-}{10k\Omega} = \frac{v_x}{10k\Omega} \Rightarrow \frac{v_x}{i_x} = R_{eq} = R_{in} = 10\,k\Omega$$

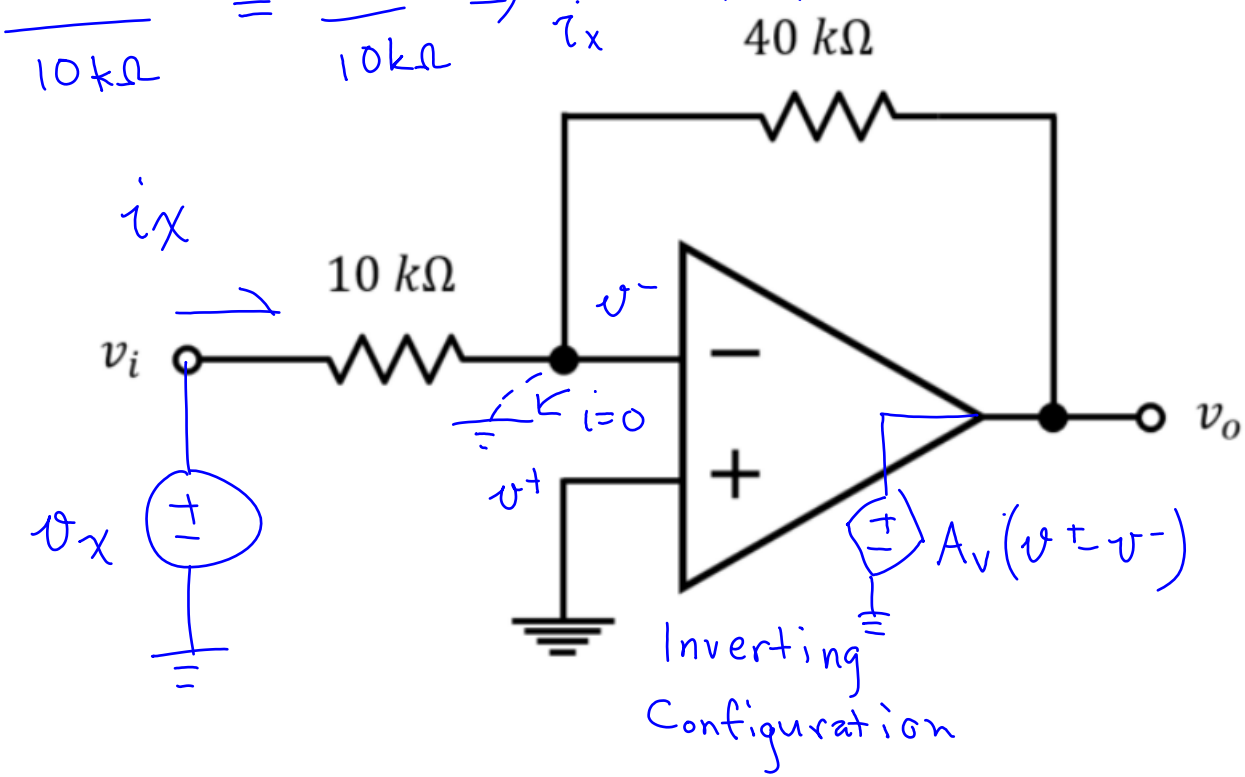

Laplace Domain Transfer Functions

- In the circuit below, derive the transfer function $V_i(s)/V_s(s)$. What type of frequency response does the circuit form and what is the 3-dB frequency?

$s = j\omega$ rad/sec

$\sqrt{-1}$

$Z_c = \frac{1}{sC}$

$Z_L = sL \quad Z_R = R$

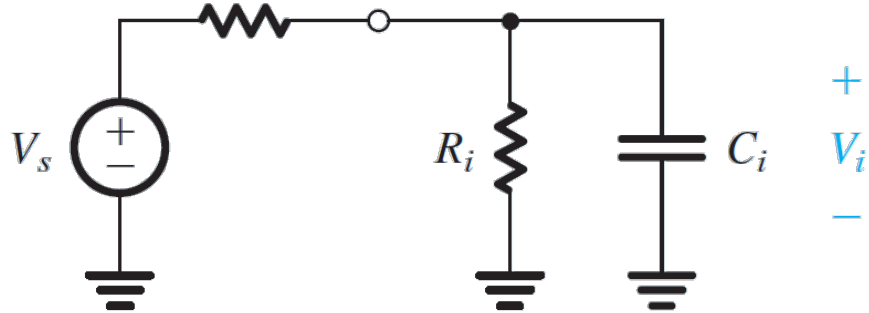

$$Z_{R_i} \| Z_c = \frac{\frac{1}{sC_i} \cdot R_i}{\frac{1}{sC_i} + R_i} = \frac{R_i}{1 + sR_iC_i}$$

$$V_s \frac{(Z_{R_i} \| Z_{C_i})}{(Z_{R_i} \| Z_{C_i}) + R_s} = V_i \Rightarrow \frac{V_i}{V_s} = \frac{R_i/(1+sR_iC_i)}{\frac{R_i}{(1+sR_iC_i)} + R_s} = \frac{R_i}{R_i + R_s(1+sR_iC_i)}$$

Fourier Series

- Any periodic signal can be decomposed into a sum of pure sinusoids
- The more terms of the Fourier series you use, the better the sum will approximate the actual signal
- See Matlab example