PROBLEM SET #2

Issued: Friday, September 4, 2020

Due: Friday, September 11, 2020, at 12:00 noon via Gradescope.

Reading Assignment: Sedra & Smith, §2.1–2.5, §2.7

Unless otherwise stated, you may assume all op amps are ideal.

1. Sedra & Smith, Problem 2.23

2. For this problem, refer to the op amp circuit in Fig. PS2.1.

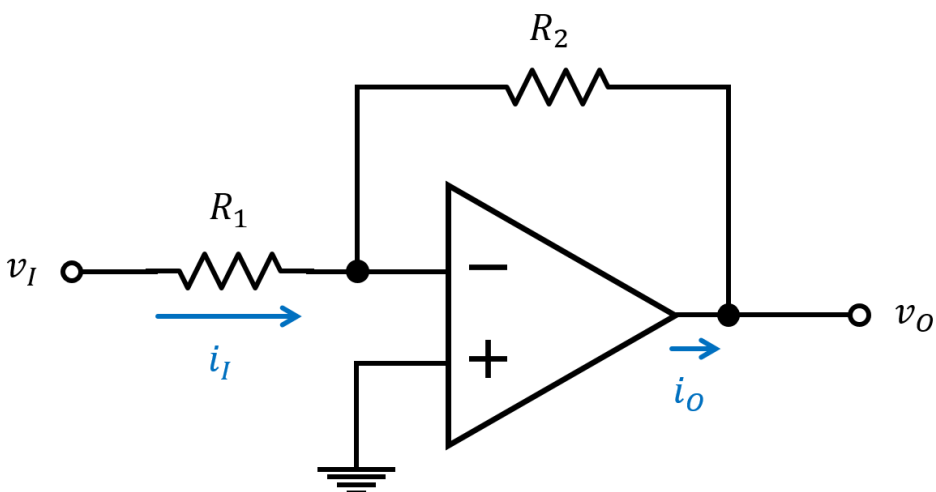

Figure PS2.1

(a) What are the voltage gain (v_O/v_I), input resistance, and output resistance if $R_1 = 22$ kΩ and $R_2 = 110$ kΩ?

(b) What is the output voltage if $v_I = 0$ V?

(c) What is the output voltage if a dc signal $V_I = 0.22$ V is applied to the circuit?

(d) What is the output voltage if an ac signal $v_I = (0.15)\sin(2500\pi t)$ V is applied to the circuit?

(e) What is the output voltage if the input signal is $v_I = 0.22 - (0.15)\sin(2500\pi t)$ V?

(f) What are the input current i_I, op amp output current i_O, and voltage at the inverting input of the op amp, v^- for the input signal in part (d)?

(g) If the op amp operates with ±12 V power supplies and the signal $v_I = 0.22 - V_i \sin(2500\pi t)$ is applied, what is the maximum amplitude of the input signal V_i for an undistorted output?

3. For this problem, refer to the op amp circuit in Figure PS2.2.

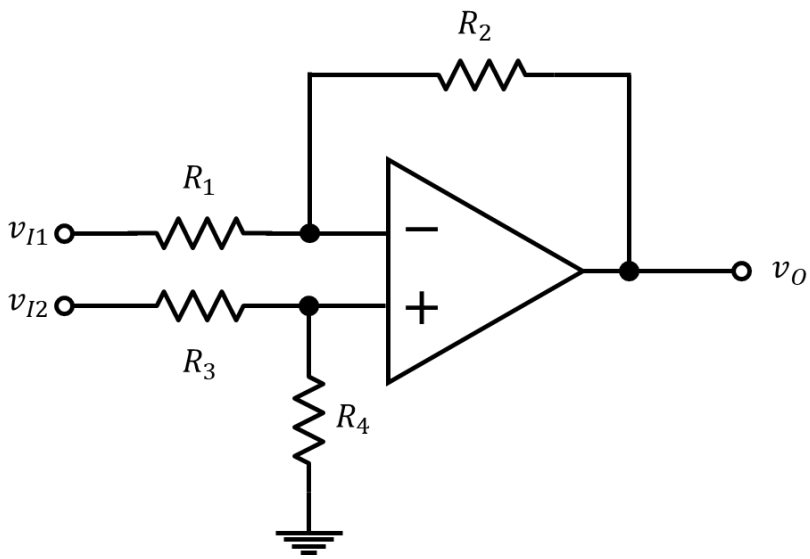

Figure PS2.2

(a) Find the output voltage, v_o in terms of the two input voltages, v_{I1} & v_{I2}, and R_1, R_2, R_3 and R_4.

(b) In the special case where $R_1 = R_2 = R_3 = R_4 = R$, what does the expression for v_o reduce to? What "operation" is this op amp performing?

(c) Find the input resistance seen for the following cases

i. A source connected only to the v_{I1} port

ii. A source connected only to the v_{I2} port

iii. A source connected between the v_{I1} and v_{I2} ports.

iv. A source connected to both of the v_{I1} and v_{I2} ports simultaneously.

4. Sedra & Smith, Problem 2.92. Additionally, draw the magnitude and phase Bode plots for the transfer function of your final design.