Lecture 28: Low Frequency Circuit Analysis

- Announcements:
- HW#9 online and due this coming Friday
- Lab#5 online and due 5 p.m., Friday, Nov. 20
  - This is your first design project
  - We'll go through this a bit
  - Checkpoints:
    - Week of 11/9: Spice simulated design that satisfies at least two of the specs. Email the design to your TA.
    - Week of 11/16: Functional breadboard circuit that at least amplifies an input signal (need not satisfy specs, yet). Email a photo and measured waveforms to your TA.
- Midterm Exams nearly graded
- Z-scores available soon after
- ---
- Lecture Topics:
  - Open Circuit Time Constant (OCTC) Analysis
  - Short Circuit Time Constant (SCTC) Analysis
  - Intro. to Inspection Analysis
  - C.E. Design Project Hints
- ---
- Last Time:
- Finished brute force high frequency analysis and started OCTC analysis
- Now, continue with this …

1

C.E. High Freq. Analysis (Brute Force)

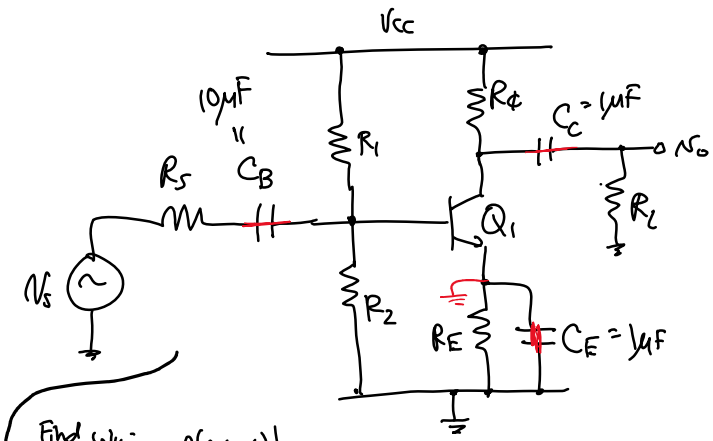

Find ω_H:

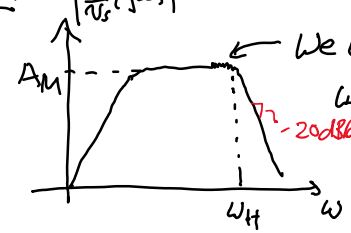

← We want this frequency, which then gives

$$\frac{v_o}{v_s}(s) = A_M \frac{1}{1+\frac{s}{\omega_H}}$$

Small-Signal Ckt:

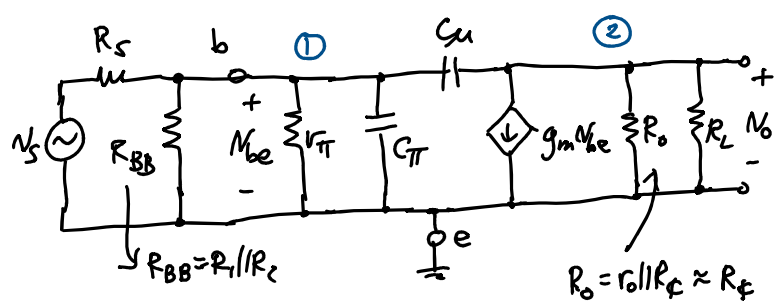

2

Copyright © 2020 Regents of the University of California

* Take a closer look @ the form of ω_{p1}:

$$\omega_H = \omega_{p1} \cong \frac{1}{\underbrace{R'C_\pi}_{\tau_{\pi 0} = R_{\pi 0} C_\pi} + \underbrace{(R' + R'' + g_m R' R'')C_\mu}_{\tau_{\mu 0} = R_{\mu 0} C_\mu}}$$ *

Can think of the denominator as the sum of time constants associated w/ each capacitor in the ckt!

3

Freq. Response

Recall that the transfer function of a general amplifier can be expressed as a function of frequency via:

$$A(s) = A_M F_L(s) F_H(s)$$

A_M: midband gain; $F_L(s)$: low freq. shaping; $F_H(s)$: high frequency shaping

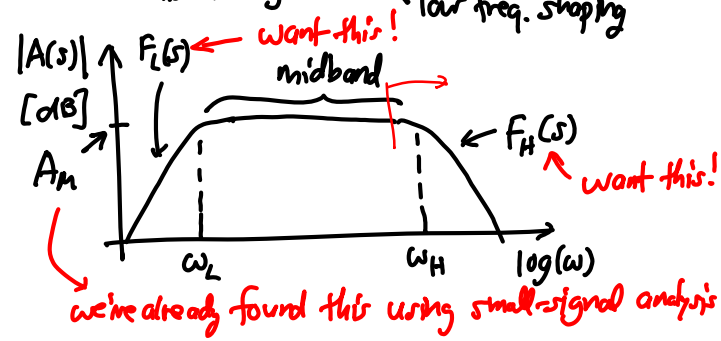

High Freq Response Determination Using Open Ckt. Time Constant (OCTC) Analysis

In general:

$$F_H(s) = \frac{1 + a_1 s + a_2 s^2 + \cdots + a_{n_z} s^{n_z}}{1 + b_1 s + b_2 s^2 + \cdots + b_{n_p} s^{n_p}}, \quad n_p > n_z$$

$$= \frac{\prod_{j=1}^{n_z}\left(1 - \frac{s}{z_j}\right)}{\prod_{i=1}^{n_p}\left(1 - \frac{s}{p_i}\right)} = \frac{\prod_{j=1}^{n_z}\left(1 + \frac{s}{\omega_{zj}}\right)}{\prod_{i=1}^{n_p}\left(1 + \frac{s}{\omega_{pi}}\right)}$$

from which:

$$b_1 = \frac{1}{\omega_{p1}} + \frac{1}{\omega_{p2}} + \cdots + \frac{1}{\omega_{pn_p}} = \sum_{i=1}^{n_p} \frac{1}{\omega_{pi}} = \sum_{k=1}^{n_p} \tau_{pk}$$

coeff. of the 1st order term

4

Copyright © 2020 Regents of the University of California

Through network theory, one can prove that: (see Gray & Meyer, Chpt. 7)

$$\sum_{i=1}^{n_p} \tau_{pi} = \sum_j C_j R_{j0} = \sum_j \tau_{j0} = b_1$$

where C_j are capacitors in the H.F. ckt., i.e., small ones

$R_{j0} \triangleq$ driving pt. resistance seen between the terminals of C_j determined with

1. all small (<1nF) capacitors open-circuited
2. all independent sources eliminated (i.e., short voltage sources, open current sources)
3. short all large (coupling/bypass) capacitors (i.e., >1μF or >1nF)

In calculating the H.F. response, we use the dominant pole approximation:

(i) $\omega_{p1} \ll \omega_{p2}, \ldots, \omega_{pn_p}$

(ii) $F_H(s) \cong \dfrac{1}{1+b_1 s} = \dfrac{1}{1+\frac{s}{\omega_H}}$

(iii) $\boxed{\omega_H \cong \dfrac{1}{b_1} = \dfrac{1}{\sum_j C_j R_{j0}} = \dfrac{1}{\sum_j \tau_{j0}}}$

When there is no dominant pole, an approximate expression for ω_H is:

$$\omega_H \approx \frac{1}{\sqrt{\frac{1}{\omega_{p1}^2} + \frac{1}{\omega_{p2}^2} + \cdots - \frac{1}{\omega_{z1}^2} - \frac{1}{\omega_{z2}^2} - \cdots}}$$

(just FYI)

- Now, use OCTC analysis on the CE amplifier to find the upper cut-off frequency, ω_H

5

C.E. High Freq Analysis Using OCTC

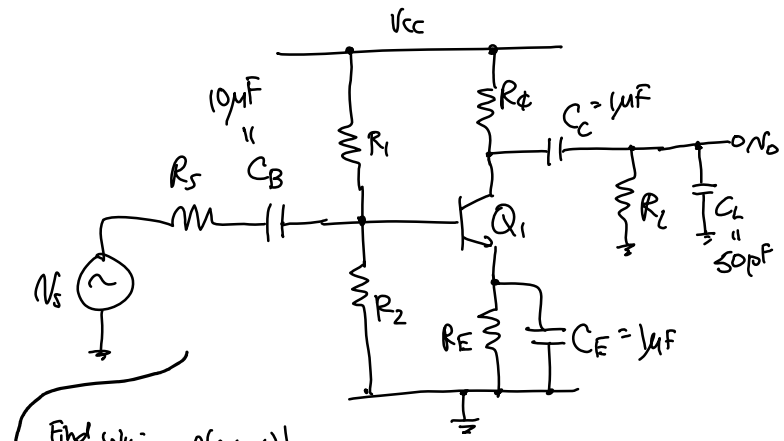

Find ω_H:

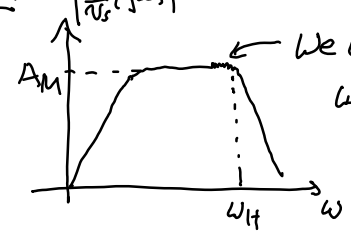

We want this frequency, which then gives us

$$\frac{v_o}{v_s}(s) = A_M \frac{1}{1+\frac{s}{\omega_H}}$$

Small-Signal Ckt:

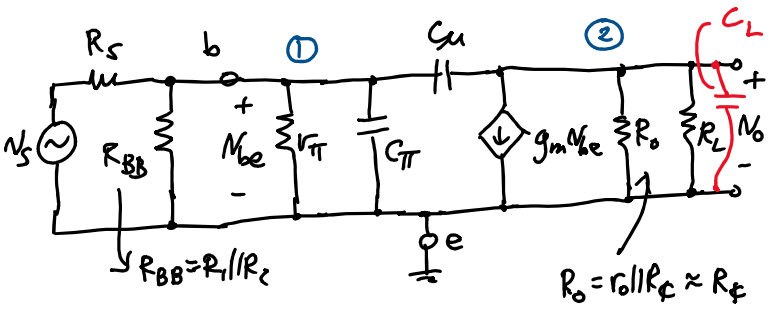

6

Copyright © 2020 Regents of the University of California

(a) Determine $\tau_{\pi o} = C_\pi R_{\pi o}$

$\Rightarrow$ open ckt. all C's, zero out all sources, and determine the driving point impedance $R_{\pi o}$:

small-signal

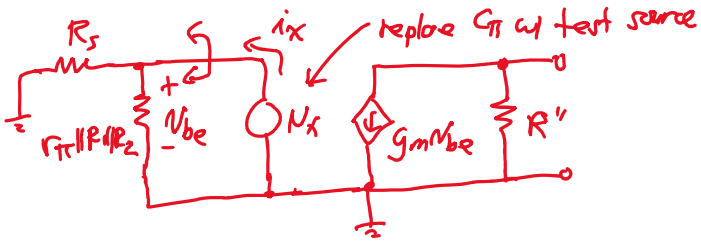

$R_{\pi o} = \frac{v_x}{i_x} = r_\pi \| R_1 \| R_2 \| R_s = R'$ (by inspection)

$\therefore \boxed{\tau_{\pi o} = C_\pi R'}$

(b) Determine $\tau_{\mu o} = C_\mu R_{\mu o}$:

$\Rightarrow$ need $R_{\mu o}$:

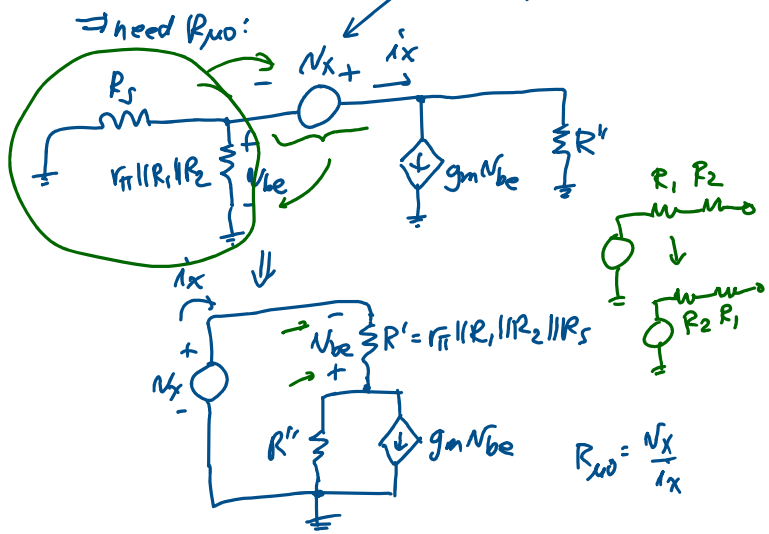

$R_{\mu o} = \frac{v_x}{i_x}$

7

KVL: $v_x = i_x R' + R''(i_x - g_m v_{be})$

$[v_{be} = -i_x R'] \rightarrow v_x = i_x R' + R''(i_x + i_x R' g_m)$

$\therefore R_{\mu o} = \frac{v_x}{i_x} = R' + R'' + g_m R' R''$

$\therefore \boxed{\tau_{\mu o} = C_\mu (R' + R'' + g_m R' R'')}$

(c) Determine $\tau_{Lo} = C_L R_{Lo}$:

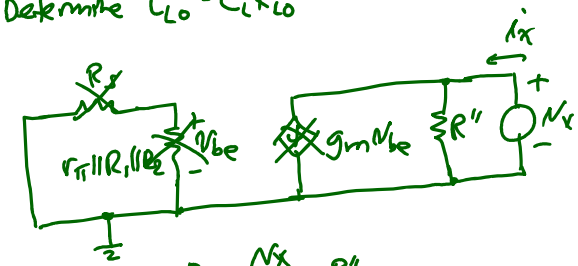

$R_{Lo} = \frac{v_x}{i_x} = R''$

$\therefore \boxed{\tau_{Lo} = C_L R''}$

Thus:

$$\boxed{\omega_H = \frac{1}{\sum_j \tau_{jo}} = \frac{1}{C_\pi R' + C_\mu (R' + R'' + g_m R' R'') + C_L R''}}$$

$= \text{———} *$

8

Copyright © 2020 Regents of the University of California

Low Freq. Amplifier Response Using Short Circuit Time Constant Analysis (SCTC)

Recall:

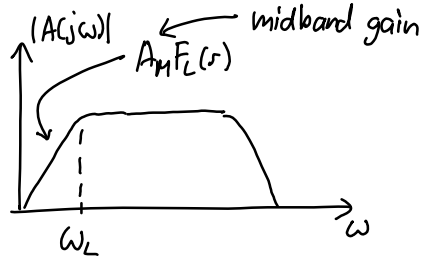

In general, for the low freq. response:

$$F_L(s) = \frac{s^{n_L} + d_1 s^{(n_L-1)} + \cdots}{s^{n_L} + e_1 s^{(n_L-1)} + \cdots}, \quad n_L = \#\text{poles} = \#\text{zeroes}$$

We can express the coefficient e_1 by:

$$e_1 = \omega_{p1} + \omega_{p2} + \cdots + \omega_{pn_L}$$

For the case of a dominant pole:
↳ i.e., the highest freq. pole

Similar analysis to that used for OCTC...

$$F_L(s) \cong \frac{s}{s+\omega_L} = \frac{s}{s+e_1} \rightarrow e_1 \cong \omega_{p1} = \omega_L$$

$$\therefore \boxed{\omega_L \cong e_1 = \sum_j \omega_{pj} = \sum_j \frac{1}{C_j R_{js}} = \sum_j \frac{1}{\tau_{js}}}$$

where $C_j \triangleq$ various large (>10nF) capacitors in the ckt. (e.g., the bypass caps.)

$R_{js} \triangleq$ driving point resistance seen between the terminals of C_j determined with:

For reading, can go to Sedra & Smith

① all large capacitors short-circuited, except C_j, which is replaced by the test voltage source for R determination

9

② all independent sources eliminated (i.e., short voltage sources, open current sources)

③ open all H.F. capacitors (i.e., small caps in the pF range, or < 1nF)

Again, for the case where there are no dominant poles, a reasonable approximation is:

$$\omega_L \cong \sqrt{\omega_{p1}^2 + \omega_{p2}^2 - 2\omega_{z1}^2 - 2\omega_{z2}^2}$$

Ex: Determine the L.F. response of the C.E Amplifier

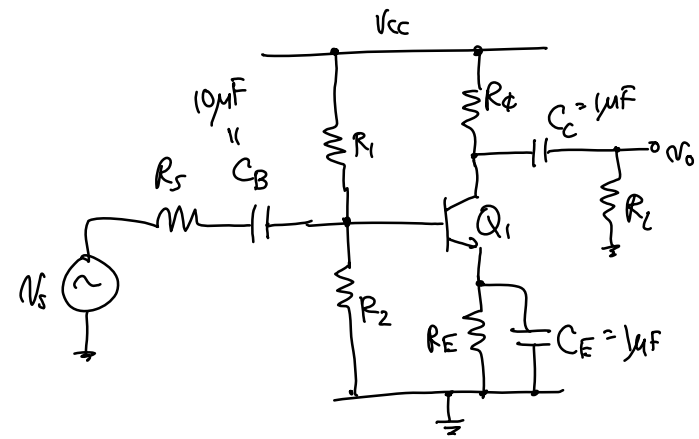

(a) C_B: short ckt. C_E & C_C, then determine R_{BS}
↑ "short"

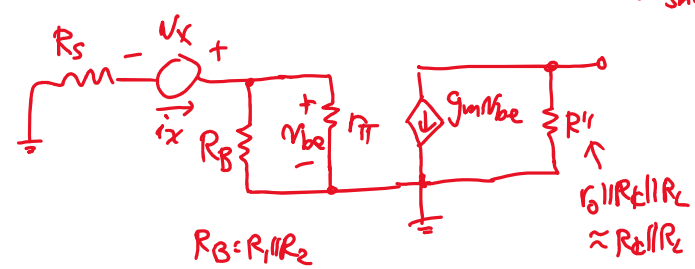

10

Copyright © 2020 Regents of the University of California

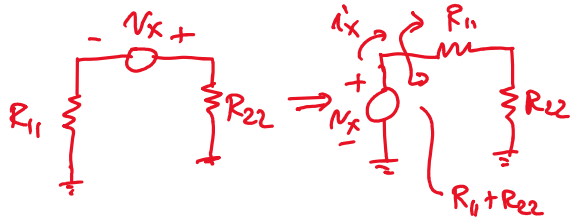

$$R_{BS} = \frac{v_x}{i_x} = R_S + r_\pi \| R_B$$

$$\therefore \boxed{\tau_{BS} = C_B(R_S + r_\pi \| R_B)} \rightarrow \boxed{\omega_{BS} = \frac{1}{\tau_{BS}} = \frac{1}{C_B(R_S + r_\pi \| R_B)}}$$

(b) C_C: short ckt. C_B & C_E, then determine R_{CS} & zero out v_s

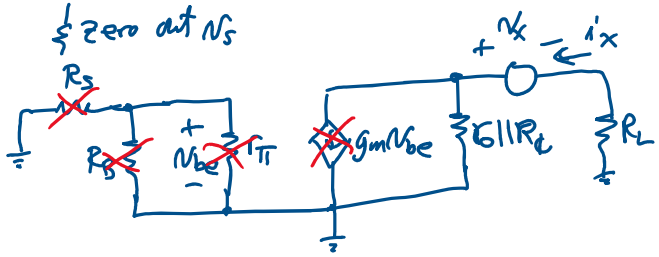

$$R_{CS} = \frac{v_x}{i_x} = R_L + r_o \| R_t \approx R_L + R_t$$

$[r_o \gg R_t]$

$$\boxed{\tau_{CS} = C_C(R_L + R_t)} \rightarrow \boxed{\omega_{CS} = \frac{1}{\tau_{CS}} = \frac{1}{C_C(R_L + R_t)}}$$

11

(c) C_E: short C_B & C_C; zero out v_s; determine R_{ES}

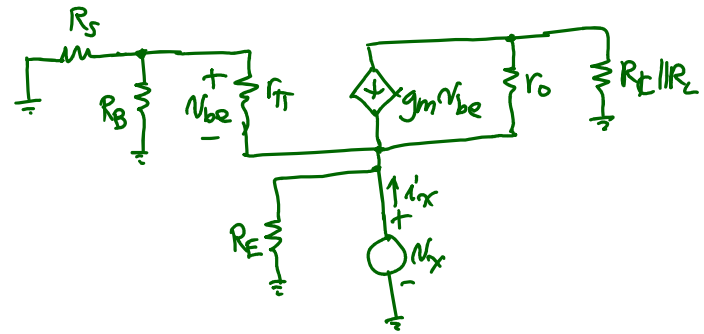

12

Copyright © 2020 Regents of the University of California