Voltage Amplifier Frequency Response

- Chapter 9 multistage voltage amplifier

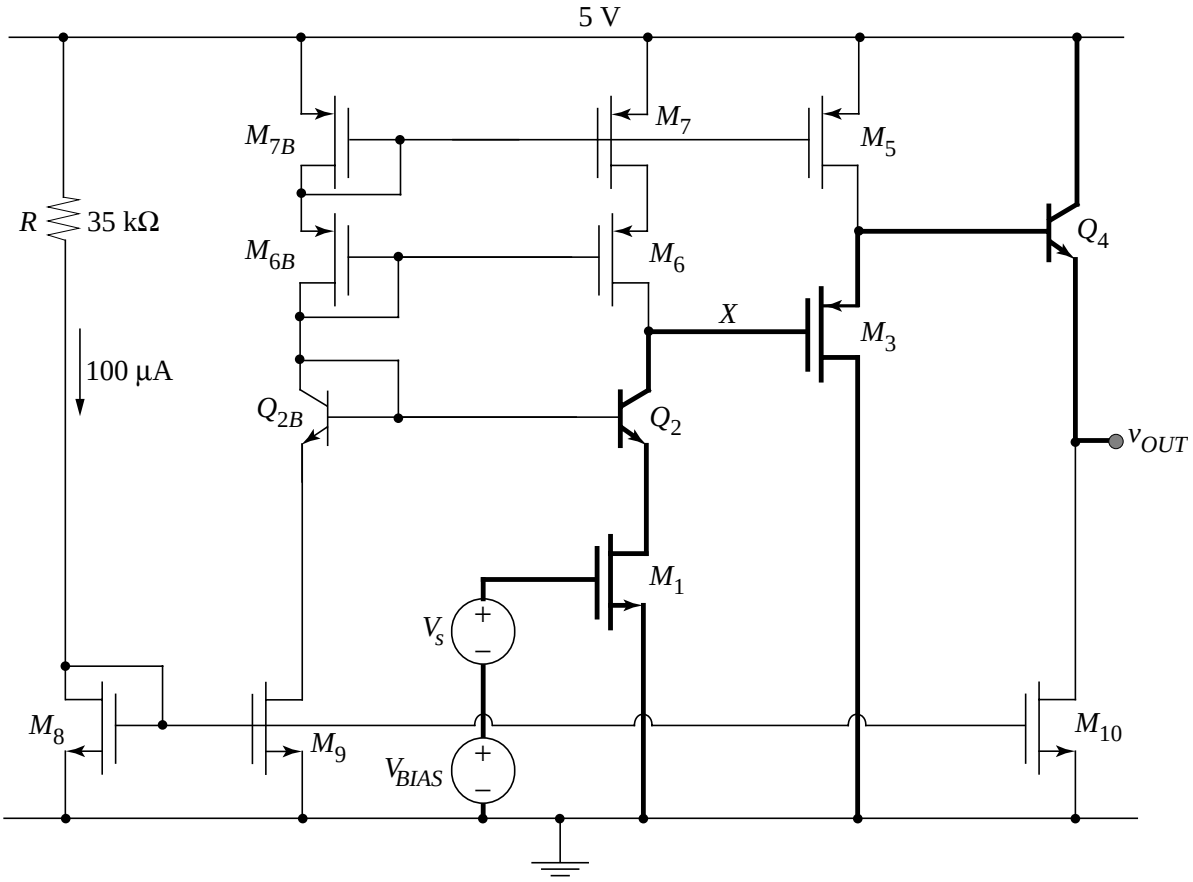

- Approaches:

  1. brute force OCTC -- do for all capacitances in the circuit
  2. identify the largest contributor(s) and calculate the Thévenin resistance associated with them

Try second approach: identify four nodes in signal path

Qualitative Evaluation of Time Constants

- Input node: no contribution since $R_S = 0$

- Drain of M_1: "low impedance node" since $R_{in(CB)} = 1/g_{m2}$

- Node X: extremely high resistance ... could be a big time constant

- Source of M_3: "low impedance node" since $R_{out(CD)} = 1/g_{m3}$

- Output node: "low impedance node" since $R_{o(CC)} = 1/g_{m4}$

Note: we are *not* considering capacitances *between* nodes here ... since we are doing an approximate analysis, we will use Miller's theorem to find their effective capacitance to ground

Small-Signal Model of Node *X*

- Account for all of the capacitances from node *X* to *small-signal* ground:

  1. Base-collector capacitance $C_{\mu 2}$ of Q_2 (since it is connected to diode-connected transistors M_{6B} and M_{7B} that are in turn connected to V_{DD})

  2. Gate-drain capacitance C_{gd6} of M_6 (since it is connected to the same node as $C_{\mu 2}$)

  3. Gate-drain capacitance C_{gd3} of M_3 (since it is connected directly to ground)

  Omitted from Section 10.7's analysis: parasitic capacitances to substrate -- C_{cs2} and C_{db6} are both present between node *X* and ground

  4. Effective capacitance due to C_{gs3} connected between the input and the output of the common-drain stage:

$$C_{eff} = C_{gs3}(1 - A_{vC_{gs3}})$$

  The gain across C_{gs3} is about 1, but an accurate calculation would include any backgate effect on M_3 if present.

- Small-signal model with all (non-parasitic) capacitances

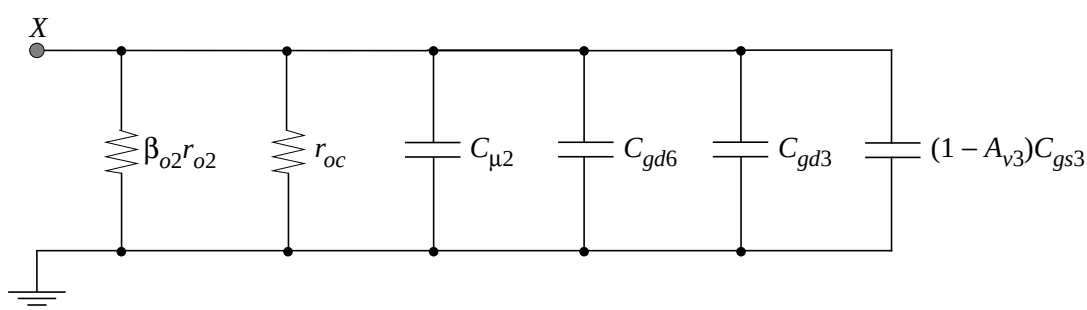

Gain-Bandwidth Product

- Considering only the time constant from node X

$$\omega_{3dB} \approx \frac{1}{[(\beta_{o2} r_{o2} || g_{m6} r_{o6} r_{o7})](C_{\mu 2} + C_{gd6} + C_{gd3} + (1 - A_{vC_{gs3}}) C_{gs3})}$$

- Approximate low-frequency gain -- from Chapter 9

$$A_{vo} \approx -g_{m1}(\beta_{o2} r_{o2} || g_{m6} r_{o6} r_{o7})$$

- Gain-bandwidth product

$$|A_{vo}| \omega_{3dB} \approx \frac{g_{m1}}{C_{\mu 2} + C_{gd6} + C_{gd3} + (1 - A_{vC_{gs3}}) C_{gs3}}$$

Magnitude Bode Plot

- Assuming that the second pole is greater than the unity gain frequency, the Bode plot is

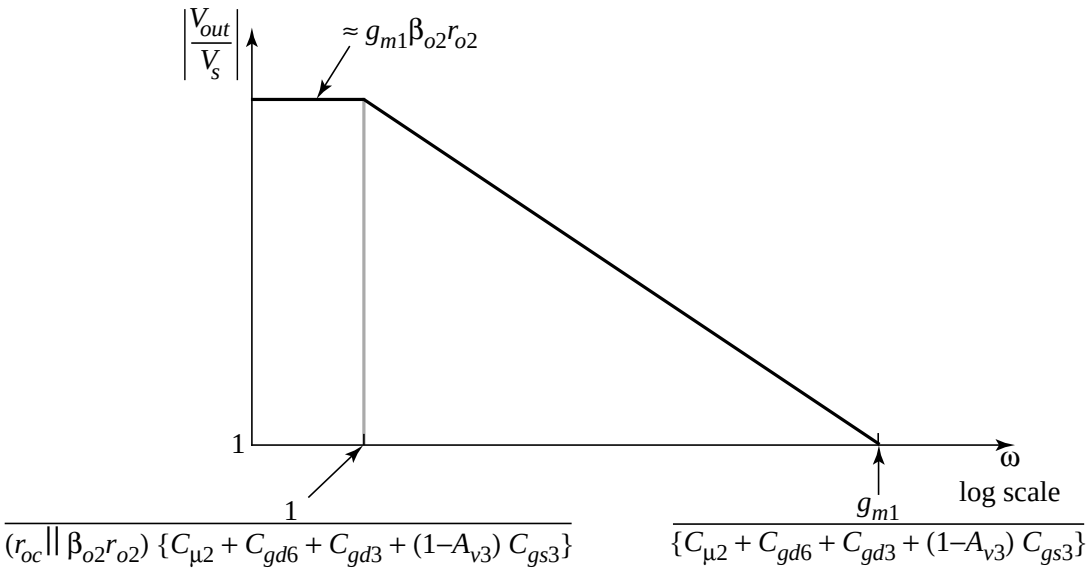

Differential Amplifiers

- General structure: two inputs, two outputs

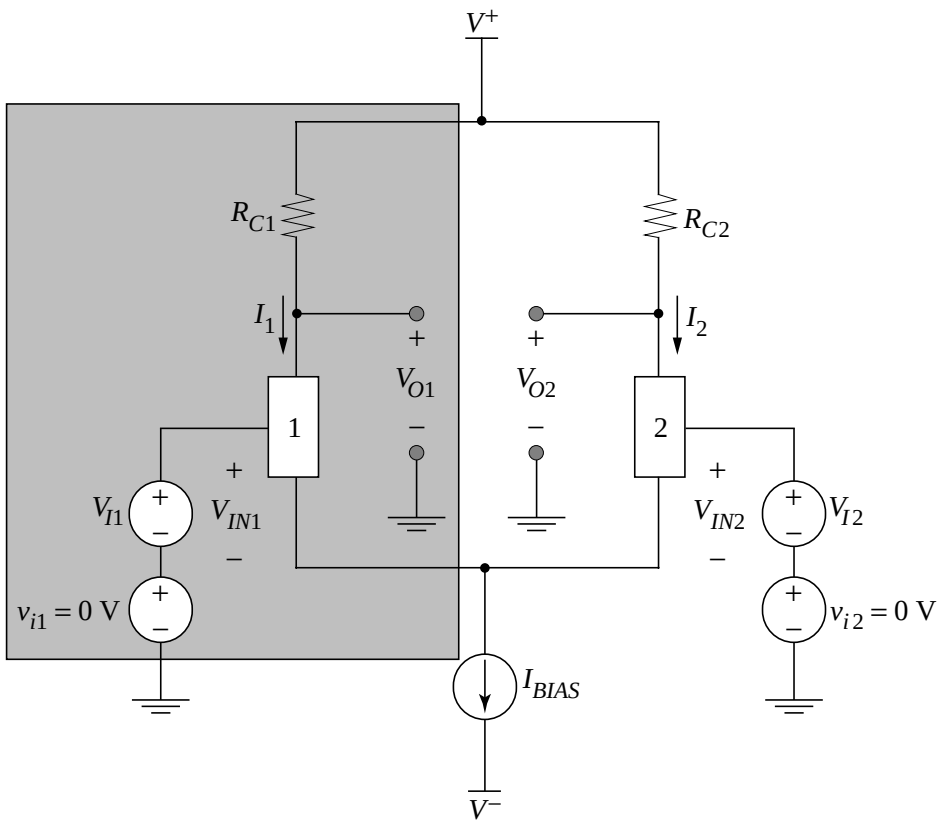

Consider balanced situation: $V_{I1} = V_{I2}$ and $R_{C1} = R_{C2}$ and devices 1 and 2 are in their constant-current modes.

$I_{BIAS} = I_1 + I_2 = 2(V^+/R_C)$

Adjust so $V_{O1} = V_{O2}$ are about 0 V (note the dual supplies)

Decomposition of Small-Signal Input Voltages

- Inputs v_{i1} and v_{i2} are *not* the "natural inputs" to understand how the differential amplifier works ...
- Define two new voltages

  differential-mode input voltage = $v_{id} = v_{i1} - v_{i2}$

  common-mode input voltage = $v_{ic} = (1/2)(v_{i1} + v_{i2})$
- Expressing the inputs v_{i1} and v_{i2} in terms of v_{id} and v_{ic}

$$v_{i1} = v_{ic} + \frac{v_{id}}{2}$$

$$v_{i2} = v_{ic} - \frac{v_{id}}{2}$$

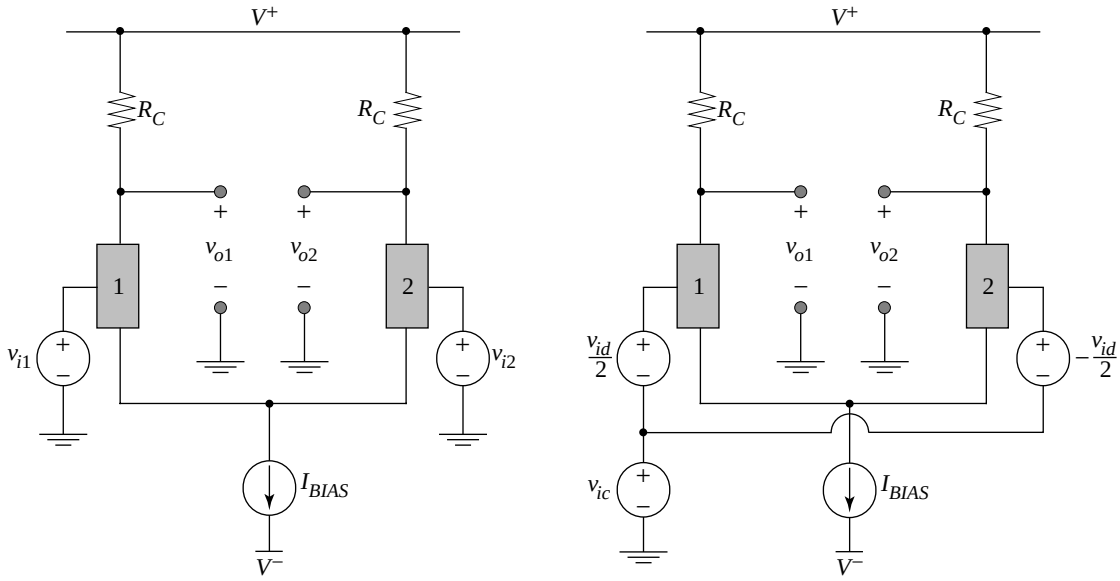

Example of Signal Decomposition

- $v_{i1} = v_{in}$ and $v_{i2} = 0$ V results in both a differential-modeand a common-mode input to the amplifier

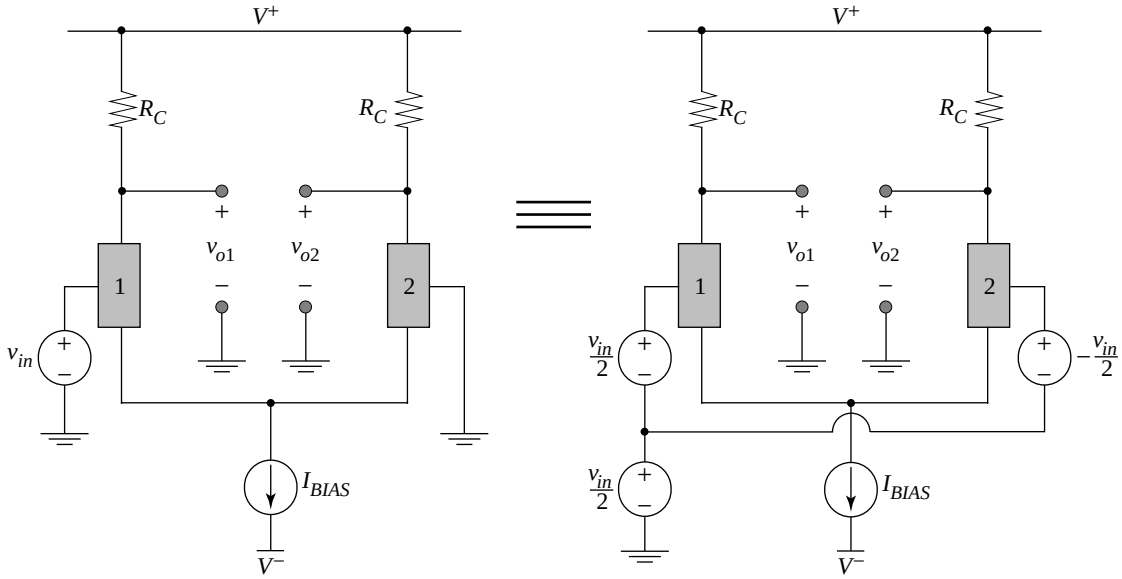

- Goal:

  determine the response of the differential amplifier to v_{id} and v_{ic} separately and then reconstruct the response

Small-Signal Model of Bipolar Diff. Amplifier

- Define r_{ob} as the internal (source) resistance of the bias current source

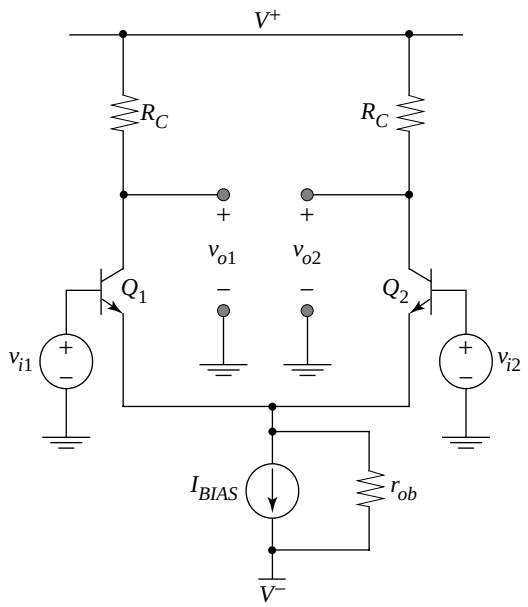

- Small-signal model with **purely differential** inputs

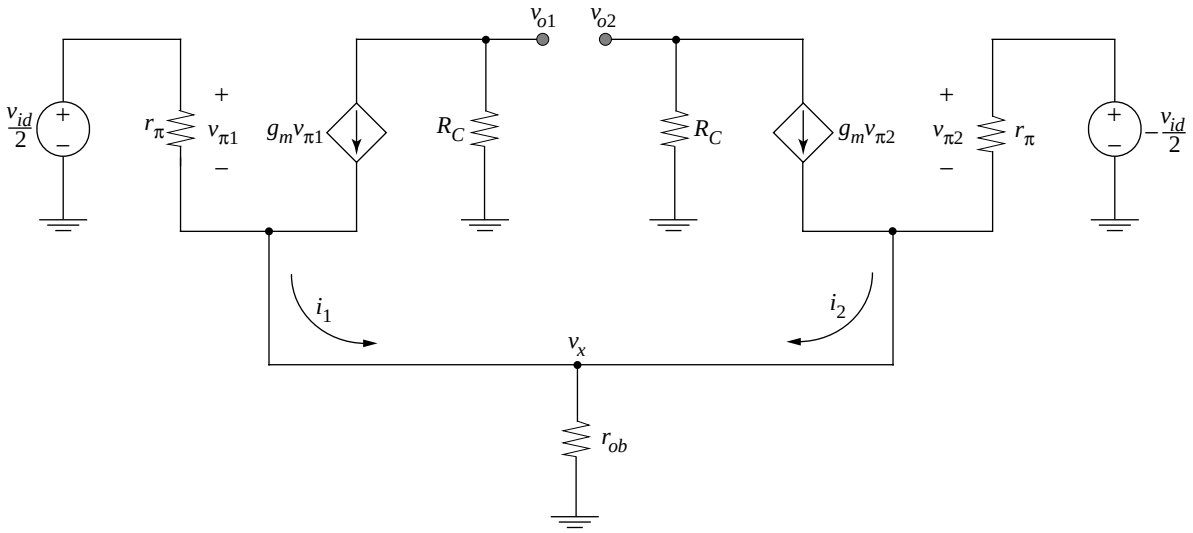

Small-Signal Model with Purely Differential Inputs

- The voltage at v_x must be zero for purely differential inputs --> it can be considered a small-signal or incremental ground reference
- Only need to solve half of the circuit, whose outputs are + or - $v_{od}/2$

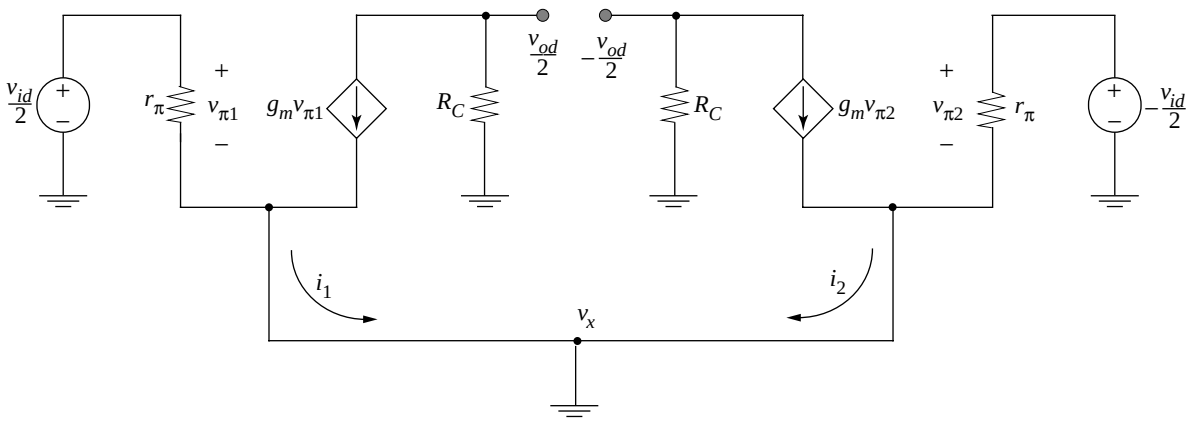

- Solve left half to find

$$\frac{v_{od}}{2} = -g_m R_C \frac{v_{id}}{2}$$

define **differential-mode gain a_{dm}** by

$$\boxed{a_{dm} = \frac{v_{od}}{v_{id}} = -g_m R_C}$$