Small-Signal Model for Common-Mode Inputs

- Now consider other extreme situation: $v_{i1} = v_{i2} = v_{ic}$

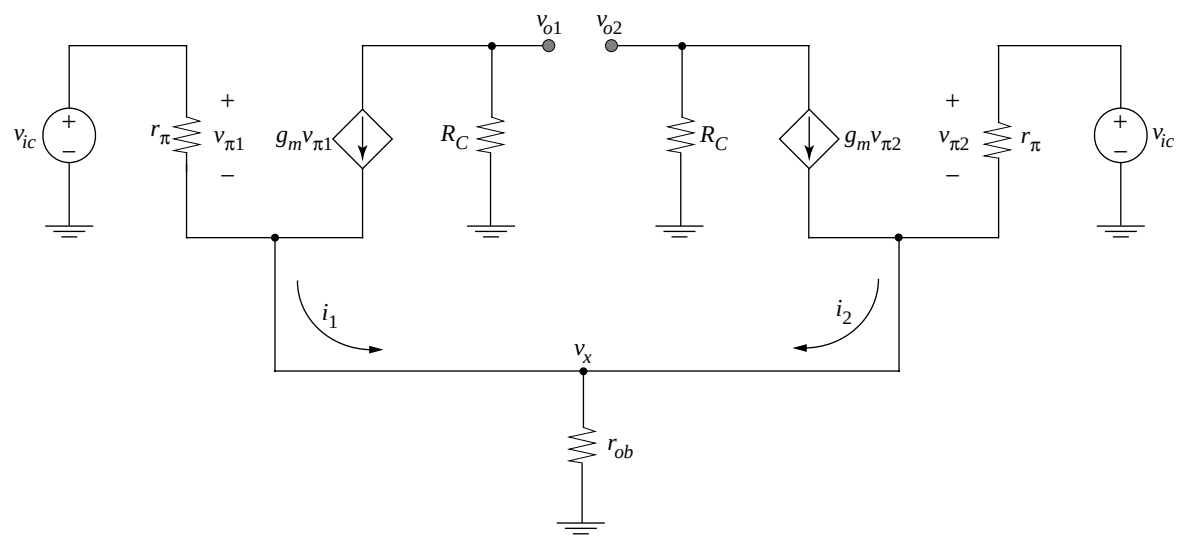

$i_1 = i_2$ --> $v_x = (2i_1)\, r_{ob}$ which will be satisfied by splitting the circuit

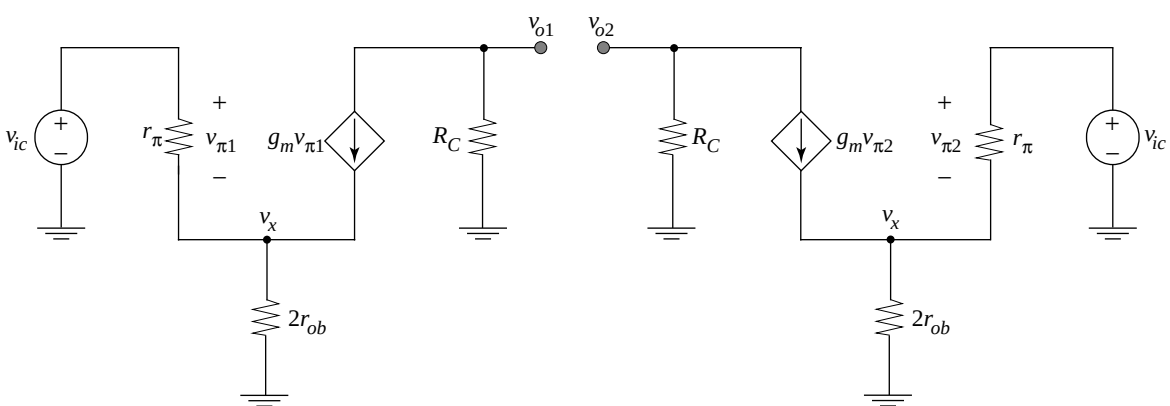

Common-Mode Voltage Gain

- Solve either circuit to find $a_{cm} = v_{oc}/v_{ic}$

$$v_{\pi 1} = v_{ic} - v_x$$

$$v_x = \left(\frac{v_{\pi 1}}{r_{\pi 1}} + g_{m1} v_{\pi 1}\right)(2r_{ob}) \approx g_{m1}(2r_{ob}) v_{\pi 1}$$

substituting and solving for $v_{\pi 1}$

$$v_{\pi 1} = \frac{v_{ic}}{1 + g_{m1}(2r_{ob})}$$

the output voltage v_{oc} is

$$v_{oc} = -(g_{m1} v_{\pi 1}) R_C = \frac{-g_{m1} R_C}{1 + g_{m1}(2r_{ob})} v_{ic}$$

- **Common-mode voltage gain a_{cm}** is

$$\boxed{a_{cm} = \frac{-g_{m1} R_C}{1 + g_{m1}(2r_{ob})}}$$

Common-Mode Rejection Ratio (CMRR)

- The ratio of differential-mode to common-mode gains is

$$\left|\frac{a_{dm}}{a_{cm}}\right| = CMRR = \left|\frac{-g_{m1}R_C}{\dfrac{-g_{m1}R_C}{1+g_{m1}(2r_{ob})}}\right| = 1 + 2g_{m1}r_{ob}$$

  since the product of the transconductance and the internal resistance of the bias current can be on the order of 100-1000, the “differential” amplifier is well-named -- it amplifies v_{id} much more than v_{ic}

  to first order, $a_{cm} \approx 0$ for differential amplifiers with current-source bias

- Output voltages for general input voltages (including a_{cm})

  express v_{o1} and v_{o2} in terms of common-mode and differential-mode output voltages

$$v_{o1} = v_{oc} + \frac{v_{od}}{2} = a_{cm}v_{ic} + \frac{1}{2}a_{dm}v_{id} = a_{cm}\left(\frac{v_{i1}+v_{i2}}{2}\right) + \frac{1}{2}a_{dm}(v_{i1}-v_{i2})$$

$$v_{o2} = v_{oc} - \frac{v_{od}}{2} = a_{cm}v_{ic} - \frac{1}{2}a_{dm}v_{id} = a_{cm}\left(\frac{v_{i1}+v_{i2}}{2}\right) - \frac{1}{2}a_{dm}(v_{i1}-v_{i2})$$

Two-Port Differential Model

- Differential input resistance: use differential half-circuit with test source $v_t/2$

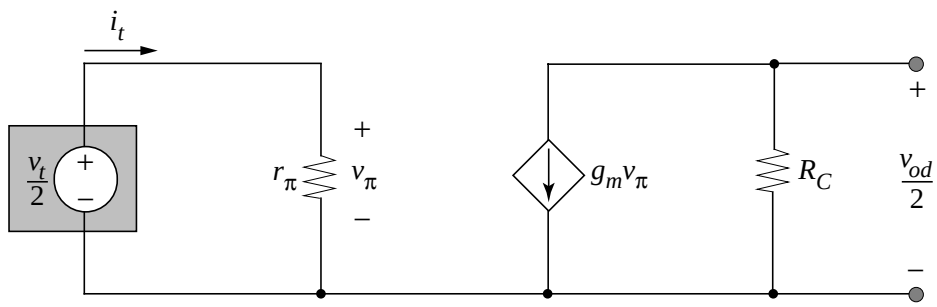

Why $v_t/2$? Full differential voltage is applied across amplifier inputs -- 1/2 is dropped across left side

$$i_t = \frac{v_t/2}{r_\pi} \text{ --> } \boxed{R_{id} = \frac{v_t}{i_t} = 2r_\pi}$$

- Differential output resistance: use differential half-circuit with test source $v_t/2$

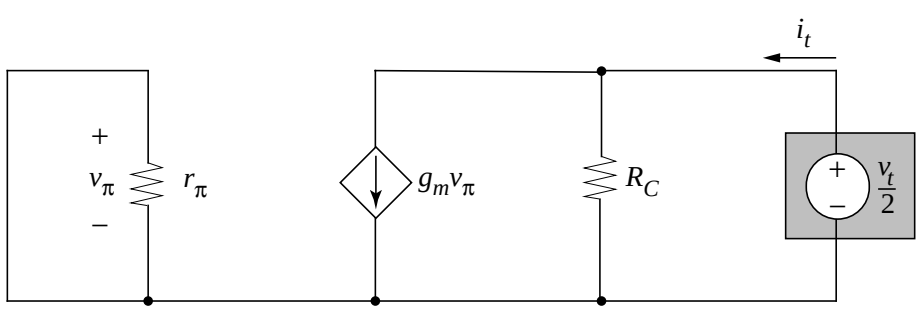

Similarly, $\boxed{R_{od} = v_t/i_t = 2R_C}$

Two-Port Differential Voltage Model

- Note that neither input nor output is referenced to ground

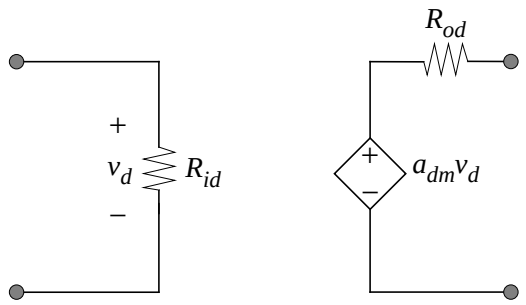

- Applying the model: must modify source and load into differential form

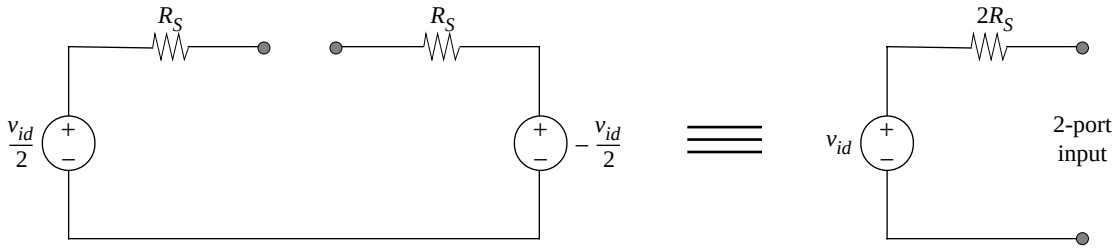

(a) (b)

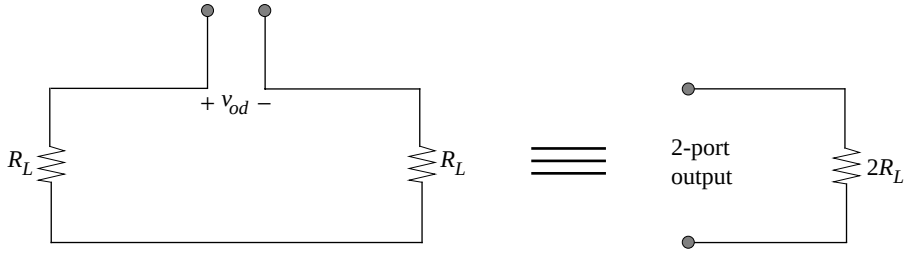

(a) (b)

Frequency Response of Differential Amplifiers

- Consider response to differential-mode and common-mode signals separately

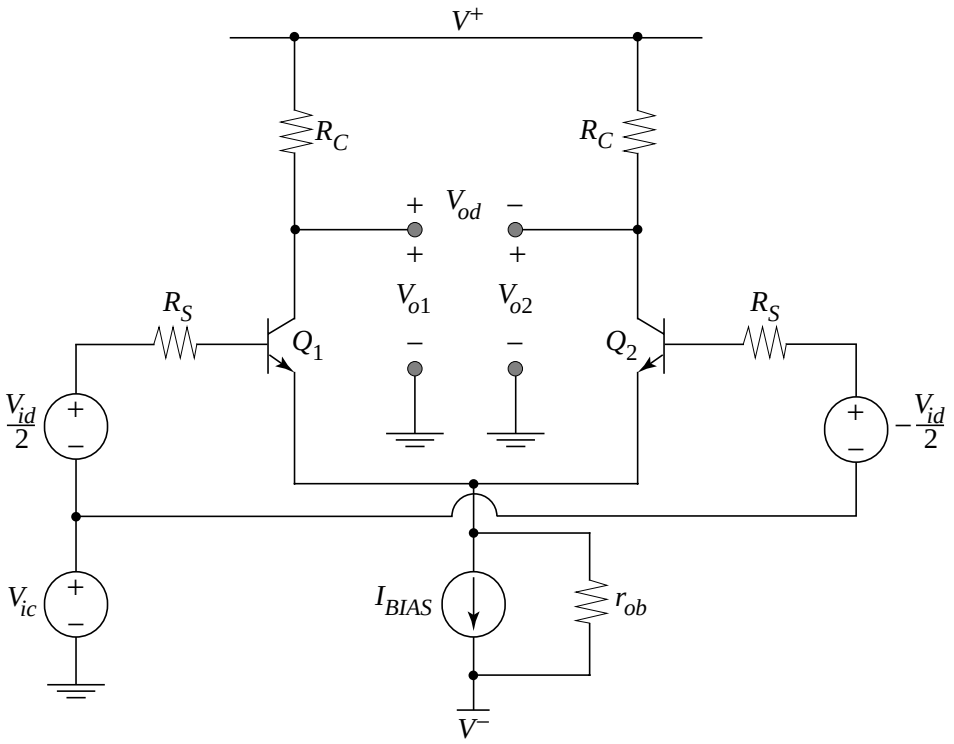

Half-circuit technique reduces differential amplifier to two “single-ended” circuits

Differential-Mode Half Circuit

- Differential-mode half circuit is identical to common-emitter

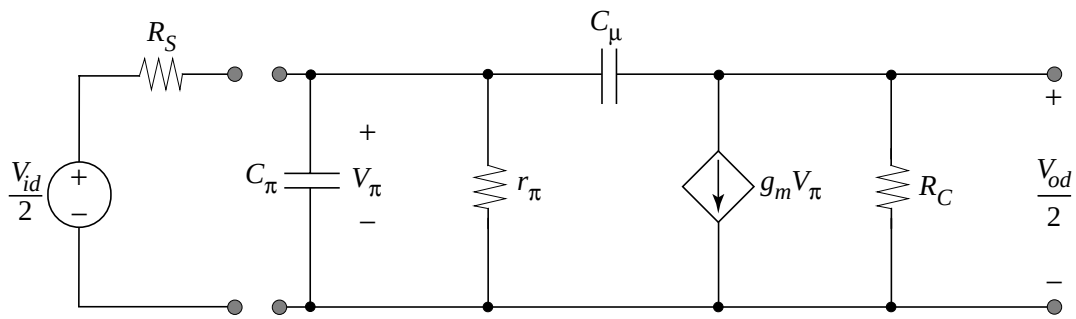

Miller or open-circuit time-constants can be used to estimate the first pole ω_1

$$\frac{V_{od}}{V_{id}} = \frac{-\left(\frac{r_\pi}{R_S + r_\pi}\right)(g_m R_C)}{1 + j\omega(R_S || r_\pi)[C_\pi + (1 + g_m R_C)C_\mu]}$$

Common-Mode Half Circuits

- Capacitance C_E from common node to ground is due to drain-to-substrate capacitance of bias current transistor

  Common-mode 1/2 circuit: split C_E in two --> C_E /2 appears on left side

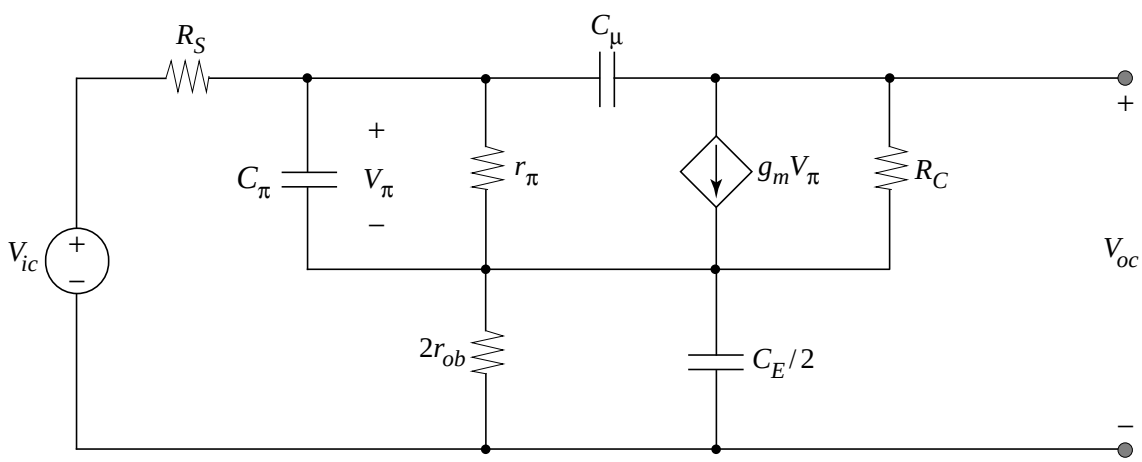

  At high frequencies, the impedance $1/(j\omega C_E/2)$ --> short circuit, which increases the common-mode gain

- The common-mode gain's dependence on frequency is found by substituting $2Z_E$ for $2r_{ob}$ in the expression for a_{cm}:

$$\frac{V_{oc}}{V_{ic}} = \frac{-g_m R_C}{1 + g_m 2Z_E}$$

  where

$$2Z_E = 2r_{ob} \| \left(\frac{1}{j\omega(C_E/2)} \right) = \frac{2r_{ob}}{1 + j\omega r_{ob} C_E}$$

Common-Mode Frequency Response (Cont.)

- Since $|Z_E|$ is large, $|g_m 2Z_E| >> 1$ -->

$$\frac{V_{oc}}{V_{ic}} \approx -\frac{R_C}{2Z_E} = -\frac{R_C}{2r_{ob}}(1 + j\omega r_{ob} C_E)$$

  The common-mode gain therefore has a zero at a relatively low frequency --

$$\omega_z = \frac{1}{r_{ob} C_E}$$

  Note that a very high value of r_{ob} leads to a lower zero frequency

- The common-mode rejection ratio as a function of frequency is

$$CMRR = \frac{a_{dm}(j\omega)}{a_{cm}(j\omega)} = \frac{CMRR_o}{(1 + j\omega r_{ob} C_E)(1 + j\omega/\omega_1)}$$

Magnitude Bode Plots of Diff. Amplifier Gains

- Common-mode gain has a pole at high frequencies