EE105 - Spring 2007
Microelectronic Devices and Circuits

Lecture 7
Cascode Stages and Current Mirrors

Cascode Stages and Current Mirrors

- 9.1 Cascode Stage
- 9.2 Current Mirrors

PMOS Cascode Stage

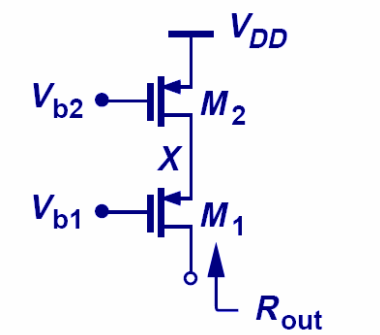

$$R_{out} = \left(1 + g_{m1} r_{O2}\right) r_{O1} + r_{O2}$$
$$R_{out} \approx g_{m1} r_{O1} r_{O2}$$

Example: Parasitic Resistance

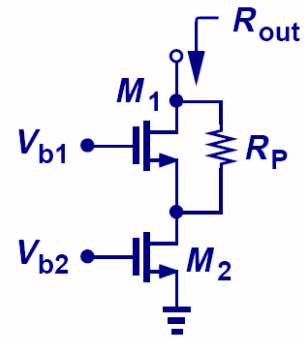

$$R_{out} = (1 + g_{m1} r_{O2})(r_{O1} \| R_P) + r_{O2}$$

- R_P will lower the output impedance, since its parallel combination with r_{O1} will always be lower than r_{O1}.

Short-Circuit Transconductance

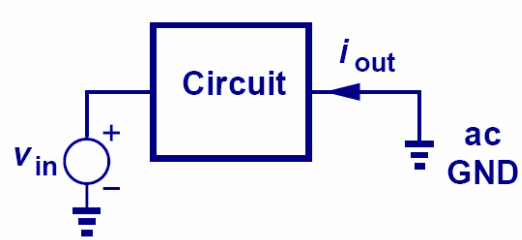

$$G_m = \left.\frac{i_{out}}{v_{in}}\right|_{v_{out}=0}$$

- The short-circuit transconductance of a circuit measures its strength in converting input voltage to output current.

Transconductance Example

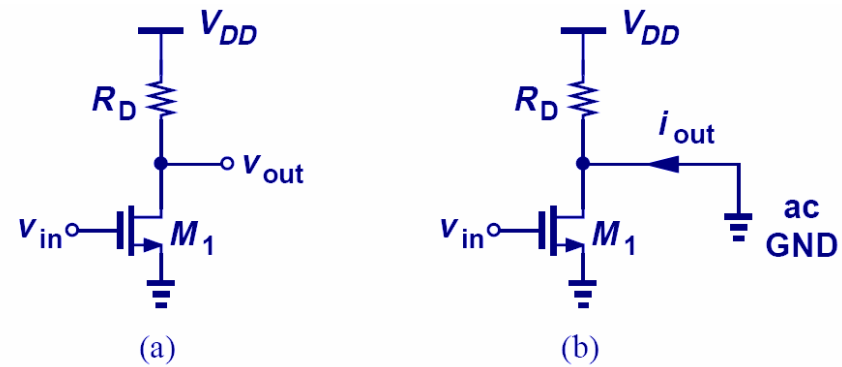

$$G_m = g_{m1}$$

Derivation of Voltage Gain

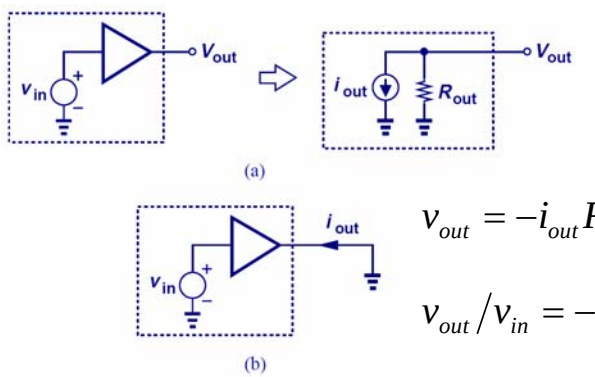

$$v_{out} = -i_{out}R_{out} = -G_m v_{in} R_{out}$$

$$v_{out}/v_{in} = -G_m R_{out}$$

- By representing a linear circuit with its Norton equivalent, the relationship between V_{out} and V_{in} can be expressed by the product of G_m and R_{out}.

MOS Cascode Amplifier

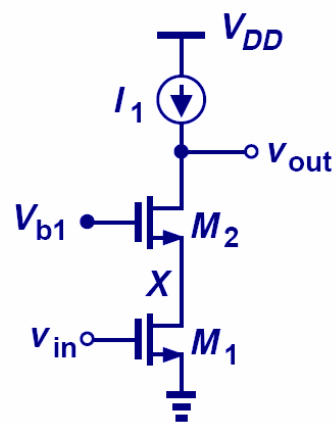

$$A_v = -G_m R_{out}$$

$$A_v \approx -g_{m1}\left[(1+g_{m2}r_{O2})r_{O1} + r_{O2}\right]$$

$$A_v \approx -g_{m1}r_{O1}g_{m2}r_{O2}$$

Improved MOS Cascode Amplifier

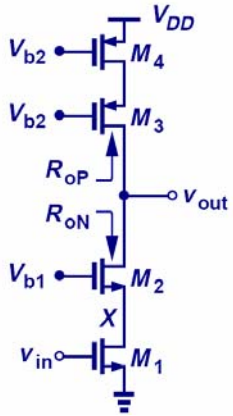

$$R_{on} \approx g_{m2} r_{O2} r_{O1}$$
$$R_{op} \approx g_{m3} r_{O3} r_{O4}$$
$$R_{out} = R_{on} \parallel R_{op}$$

- Similar to its bipolar counterpart, the output impedance of a MOS cascode amplifier can be improved by using a PMOS cascode current source.

Temperature and Supply Dependence of Bias Current

(a) (b)

$$R_2 V_{CC}/(R_1+R_2) = V_T \ln(I_1/I_S)$$
$$I_1 = \frac{1}{2}\mu_n C_{ox}\frac{W}{L}\left(\frac{R_2}{R_1+R_2}V_{DD} - V_{TH}\right)^2$$

- Since V_T, I_S, μ_n, and V_{TH} all depend on temperature, I_1 for both bipolar and MOS depends on temperature and supply.

Concept of Current Mirror

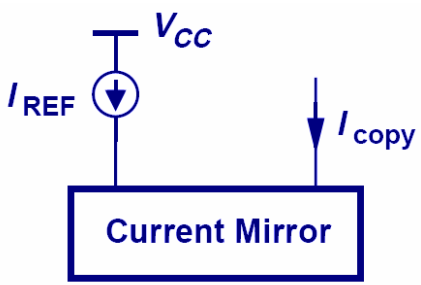

- The motivation behind a current mirror is to sense the current from a "golden current source" and duplicate this "golden current" to other locations.

MOS Current Mirror

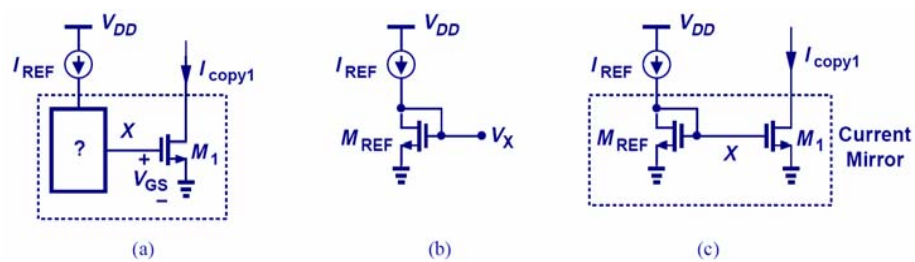

- The same concept of current mirror can be applied to MOS transistors as well.

Bad MOS Current Mirror Example

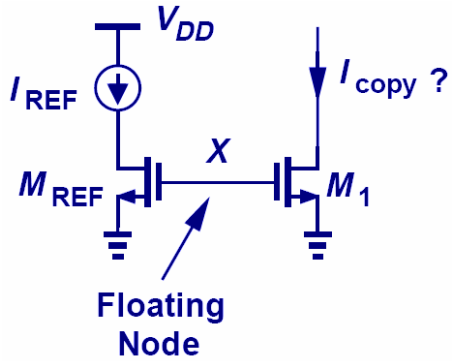

- This is not a current mirror since the relationship between V_X and I_{REF} is not clearly defined.
- The only way to clearly define V_X with I_{REF} is to use a diode-connected MOS since it provides square-law I-V relationship.

Example: Current Scaling

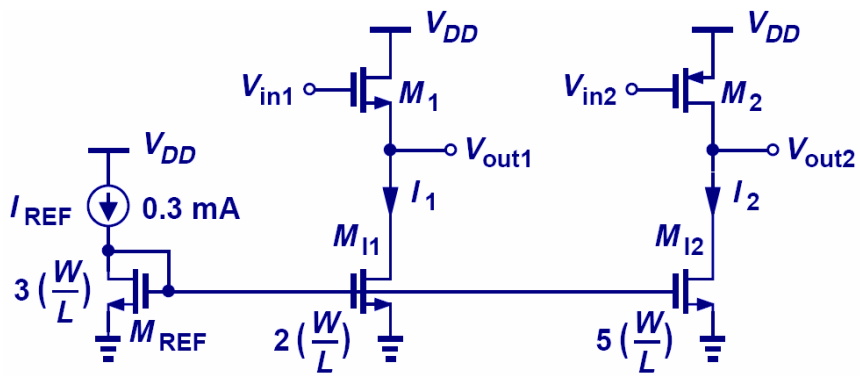

- Similar to their bipolar counterpart, MOS current mirrors can also scale I_{REF} up or down (I_1 = 0.2mA, I_2 = 0.5mA).

CMOS Current Mirror

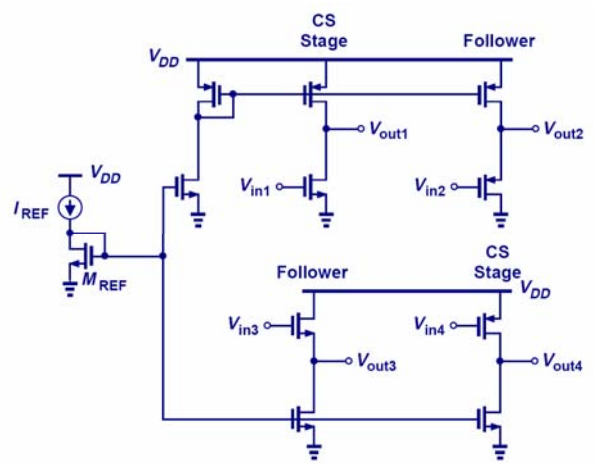

- The idea of combining NMOS and PMOS to produce CMOS current mirror is shown above.

Skip this part until we cover bipolar transistors

Boosted Output Impedances

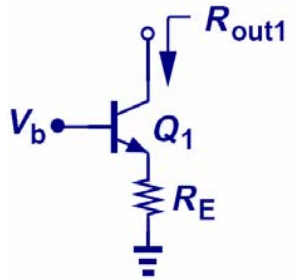

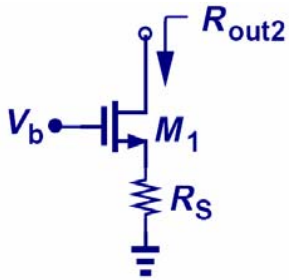

$$R_{out1} = \left[1 + g_m\left(R_E \parallel r_\pi\right)\right] r_O + R_E \parallel r_\pi$$
$$R_{out2} = \left(1 + g_m R_S\right) r_O + R_S$$

Bipolar Cascode Stage

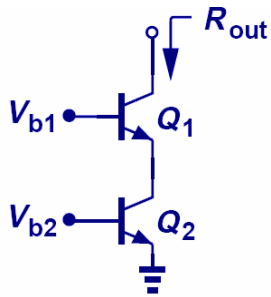

(a)

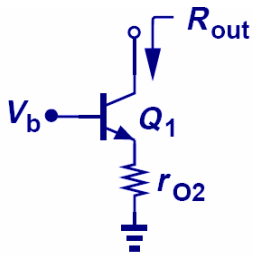

(b)

$$R_{out} = [1 + g_m(r_{O2} \parallel r_{\pi 1})] r_{O1} + r_{O2} \parallel r_{\pi 1}$$
$$R_{out} \approx g_{m1} r_{O1} \left(r_{O2} \parallel r_{\pi 1}\right)$$

Maximum Bipolar Cascode Output Impedance

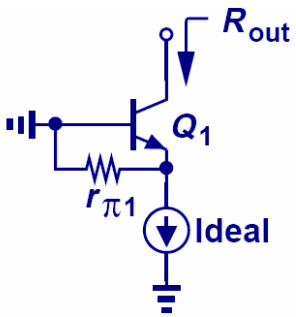

$$R_{out,\max} \approx g_{m1} r_{O1} r_{\pi 1}$$
$$R_{out,\max} \approx \beta_1 r_{O1}$$

- The maximum output impedance of a bipolar cascode is bounded by the ever-present r_π between emitter and ground of Q_1.

Example: Output Impedance

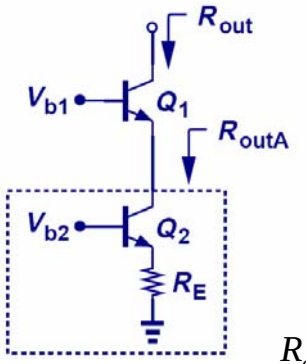

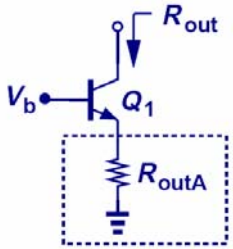

$$R_{outA} = \frac{2 r_{O2} r_{\pi 1}}{r_{\pi 1} - r_{O2}}$$

- Typically r_π is smaller than r_O, so in general it is impossible to double the output impedance by degenerating Q_2 with a resistor.

PNP Cascode Stage

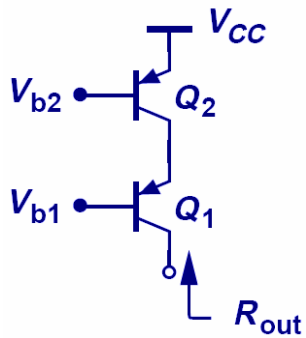

$$R_{out} = [1 + g_m (r_{O2} \parallel r_{\pi 1})] r_{O1} + r_{O2} \parallel r_{\pi 1}$$
$$R_{out} \approx g_{m1} r_{O1} \left(r_{O2} \parallel r_{\pi 1} \right)$$

Another Interpretation of Bipolar Cascode

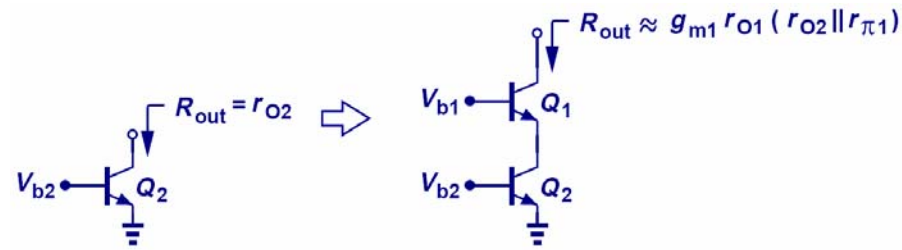

False Cascodes

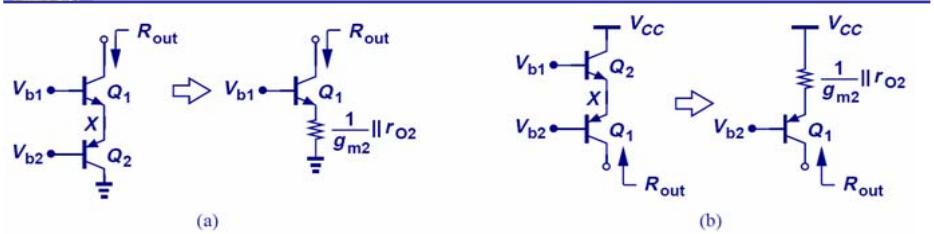

$$R_{out} = \left[1 + g_{m1} \left(\frac{1}{g_{m2}} \parallel r_{O2} \parallel r_{\pi 1} \right) \right] r_{O1} + \frac{1}{g_{m2}} \parallel r_{O2} \parallel r_{\pi 1}$$
$$R_{out} \approx \left(1 + \frac{g_{m1}}{g_{m2}} \right) r_{O1} + \frac{1}{g_{m2}} \approx 2 r_{O1}$$

- When the emitter of Q_1 is connected to the emitter of Q_2, it's no longer a cascode since Q_2 becomes a diode-connected device instead of a current source.

MOS Cascode Stage

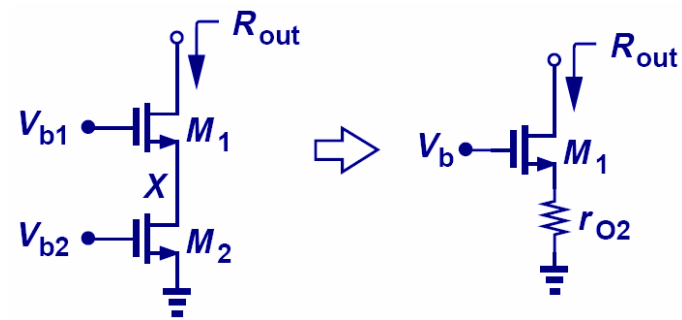

$$R_{out} = \left(1 + g_{m1} r_{O2} \right) r_{O1} + r_{O2}$$
$$R_{out} \approx g_{m1} r_{O1} r_{O2}$$

Another Interpretation of MOS Cascode

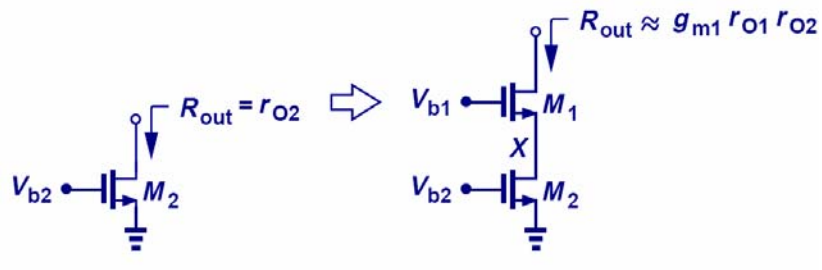

- Similar to its bipolar counterpart, MOS cascode can be thought of as stacking a transistor on top of a current source.
- Unlike bipolar cascode, the output impedance is not limited by β.

Example: Voltage Gain

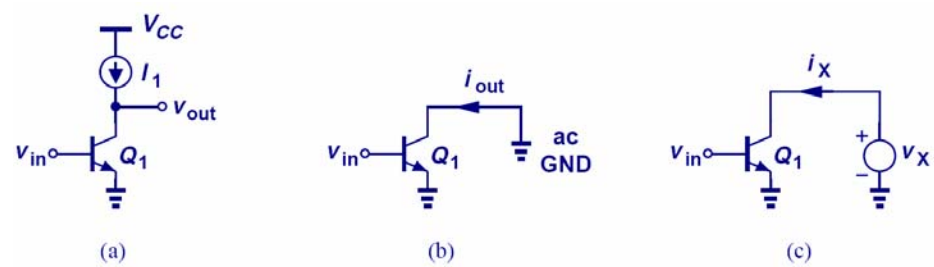

$$A_v = -g_{m1} r_{O1}$$

Comparison between Bipolar Cascode and CE Stage

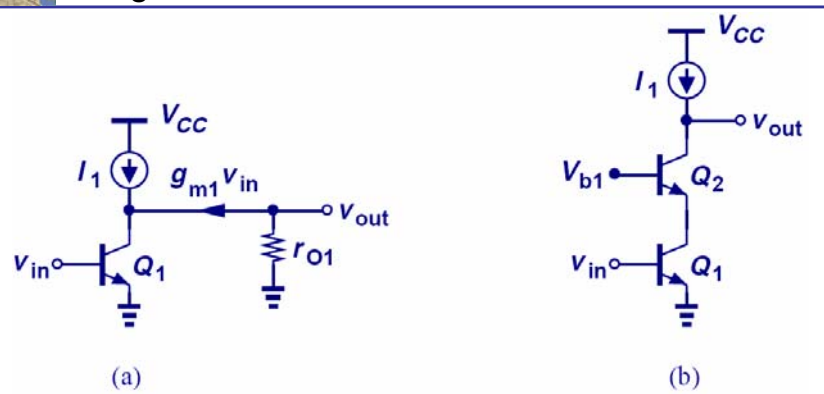

- Since the output impedance of bipolar cascode is higher than that of the CE stage, we would expect its voltage gain to be higher as well.

Voltage Gain of Bipolar Cascode Amplifier

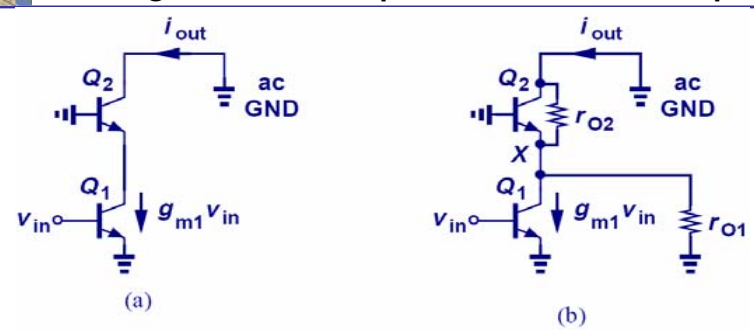

$$G_m \approx g_{m1}$$
$$A_v \approx -g_{m1} r_{O1} g_{m1} (r_{O1} \| r_{\pi 2})$$

- Since r_O is much larger than $1/g_m$, most of $I_{C,Q1}$ flows into the diode-connected Q_2. Using R_{out} as before, A_V is easily calculated.

Alternate View of Cascode Amplifier

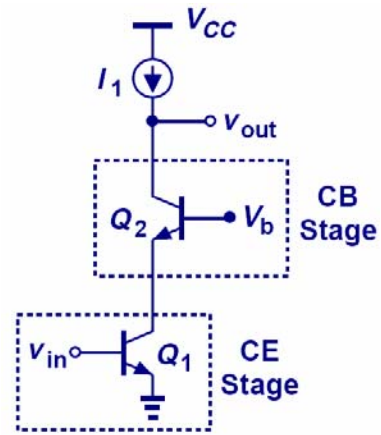

- A bipolar cascode amplifier is also a CE stage in series with a CB stage.

Practical Cascode Stage

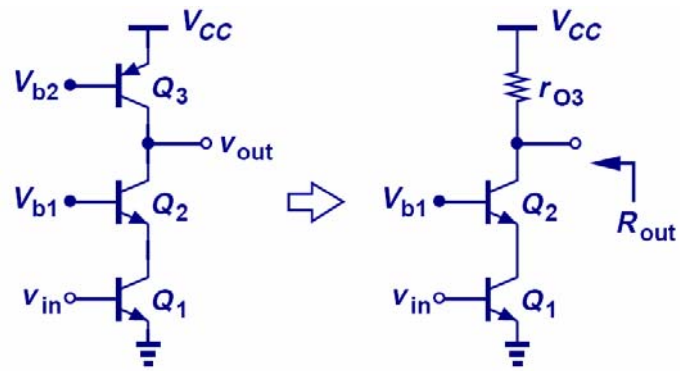

$$R_{out} \approx r_{O3} \parallel g_{m2} r_{O2} (r_{O1} \parallel r_{\pi 2})$$

- Since no current source can be ideal, the output impedance drops.

Improved Cascode Stage

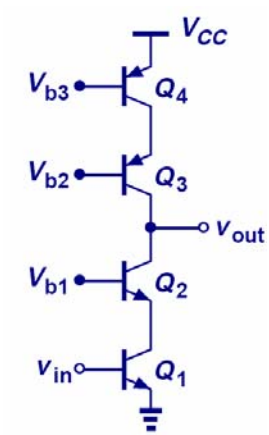

$$R_{out} \approx g_{m3} r_{O3} (r_{O4} \parallel r_{\pi 3}) \parallel g_{m2} r_{O2} (r_{O1} \parallel r_{\pi 2})$$

- In order to preserve the high output impedance, a cascode PNP current source is used.

Bipolar Current Mirror Circuitry

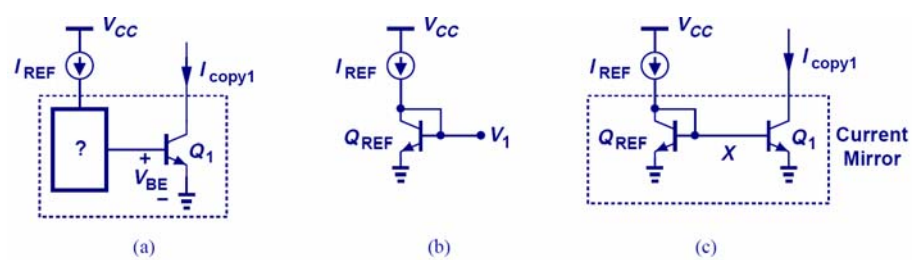

$$I_{copy} = \frac{I_{S1}}{I_{S,REF}} I_{REF}$$

- The diode-connected Q_{REF} produces an output voltage V_1 that forces $I_{copy1} = I_{REF}$, if $Q_1 = Q_{REF}$.

Bad Current Mirror Example I

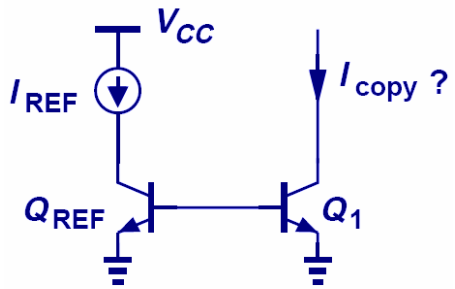

- Without shorting the collector and base of Q_{REF} together, there will not be a path for the base currents to flow, therefore, I_{copy} is zero.

Bad Current Mirror Example II

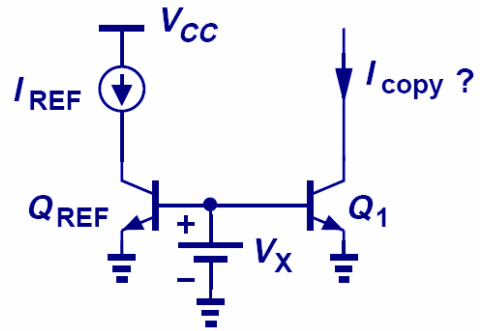

- Although a path for base currents exists, this technique of biasing is no better than resistive divider.

Multiple Copies of I_{REF}

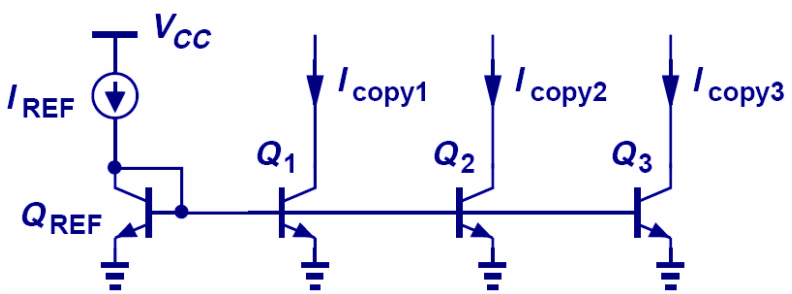

$$I_{copy,j} = \frac{I_{S,j}}{I_{S,REF}} I_{REF}$$

- Multiple copies of I_{REF} can be generated at different locations by simply applying the idea of current mirror to more transistors.

Current Scaling

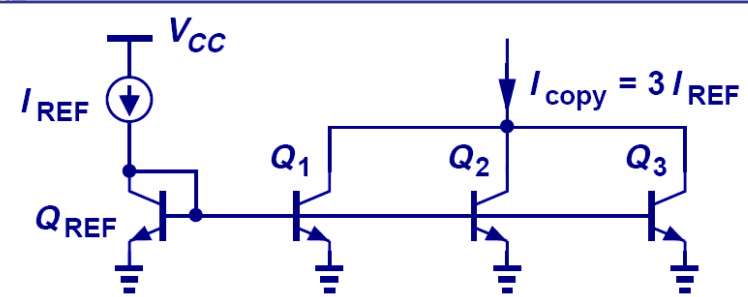

$$I_{copy,j} = nI_{REF}$$

- By scaling the emitter area of Q_j n times with respect to Q_{REF}, $I_{copy,j}$ is also n times larger than I_{REF}. This is equivalent to placing n unit-size transistors in parallel.

Example: Scaled Current

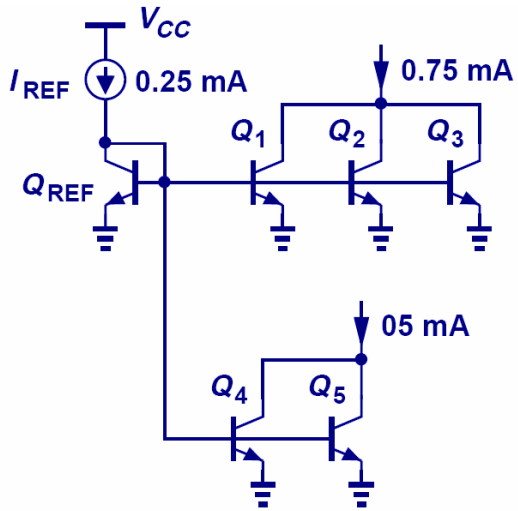

Fractional Scaling

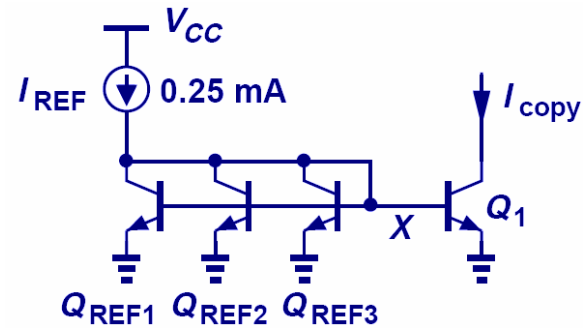

$$I_{copy} = \frac{1}{3} I_{REF}$$

- A fraction of I_{REF} can be created on Q_1 by scaling up the emitter area of Q_{REF}.

Example: Different Mirroring Ratio

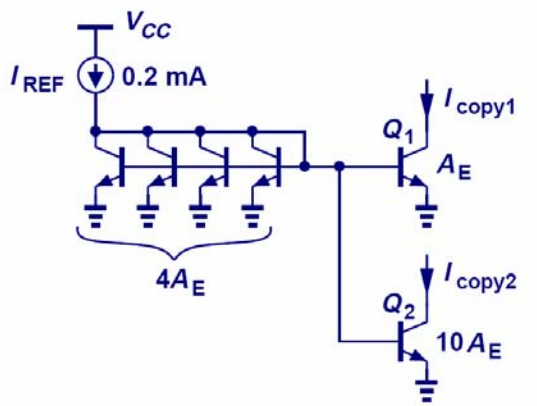

- Using the idea of current scaling and fractional scaling, I_{copy2} is 0.5mA and I_{copy1} is 0.05mA respectively. All coming from a source of 0.2mA.

Mirroring Error Due to Base Currents

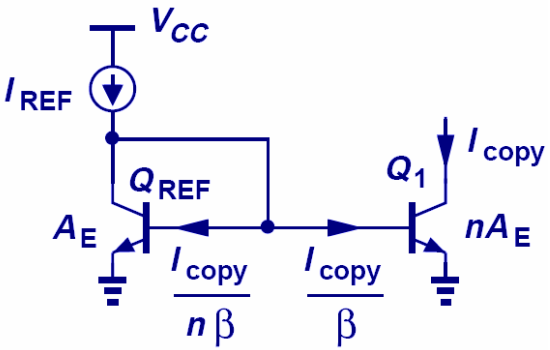

$$I_{copy} = \frac{nI_{REF}}{1 + \frac{1}{\beta}(n+1)}$$

Improved Mirroring Accuracy

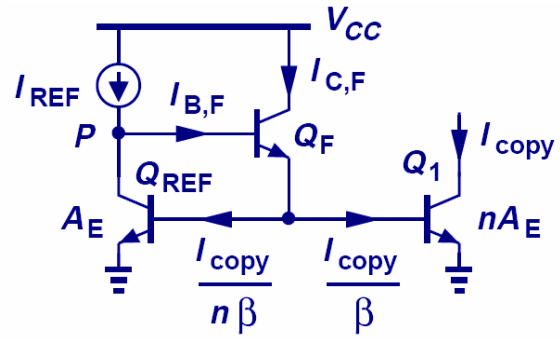

$$I_{copy} = \frac{nI_{REF}}{1+\frac{1}{\beta^2}(n+1)}$$

- Because of Q_F, the base currents of Q_{REF} and Q_1 are mostly supplied by Q_F rather than I_{REF}. Mirroring error is reduced β times.

Example: Different Mirroring Ratio Accuracy

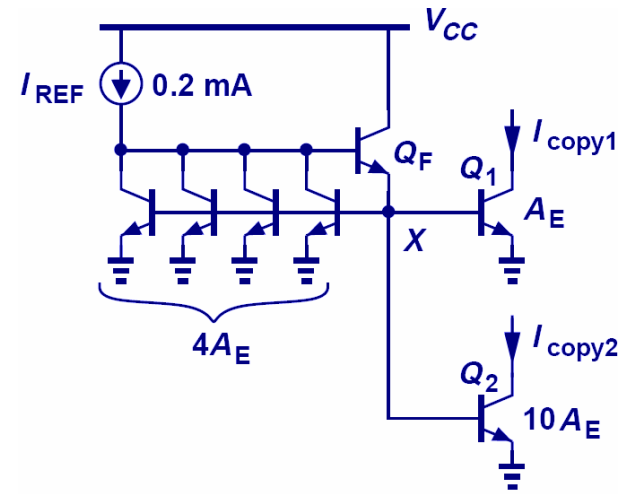

$$I_{copy1} = \frac{I_{REF}}{4+\frac{15}{\beta^2}}$$

$$I_{copy2} = \frac{10I_{REF}}{4+\frac{15}{\beta^2}}$$

PNP Current Mirror

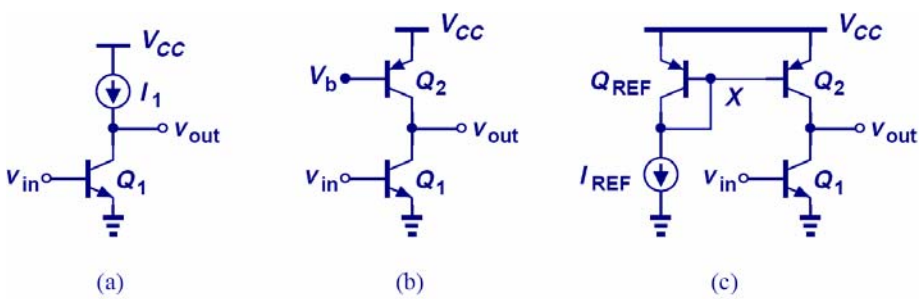

- PNP current mirror is used as a current source load to an NPN amplifier stage.

Generation of I_{REF} for PNP Current Mirror

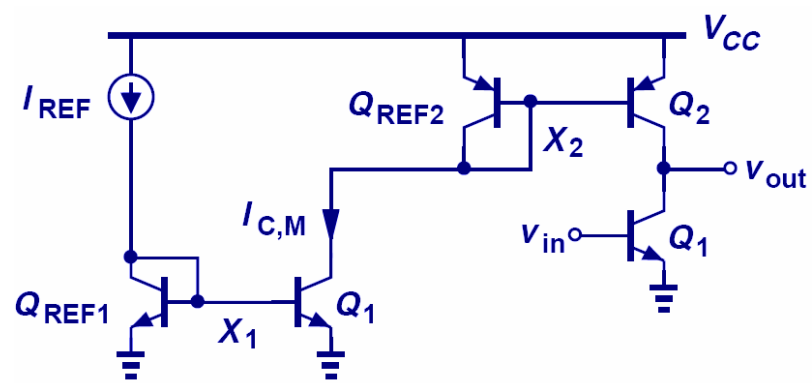

Example: Current Mirror with Discrete Devices

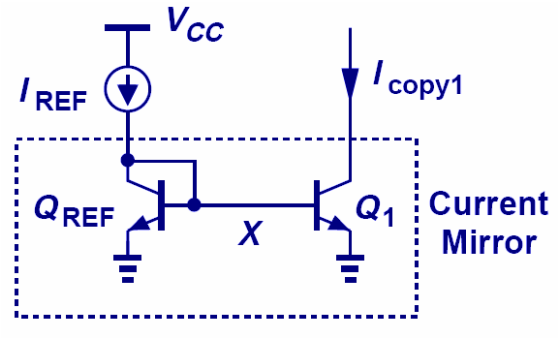

- Let Q_{REF} and Q_1 be discrete NPN devices. I_{REF} and I_{copy1} can vary in large magnitude due to I_S mismatch.