UNIVERSITY OF CALIFORNIA
College of Engineering
Department of Electrical Engineering and Computer Sciences

EE 105 Prof. Pister
Spring 2011

LAB 8 – Prelab and LAB

NAME:
SID:
Section:

For all of the questions in this prelab/lab, I'm looking for rough answers. A single digit of precision is usually fine. Both circuits 1A and 1B are different implementations of the idealized current source in 1C.

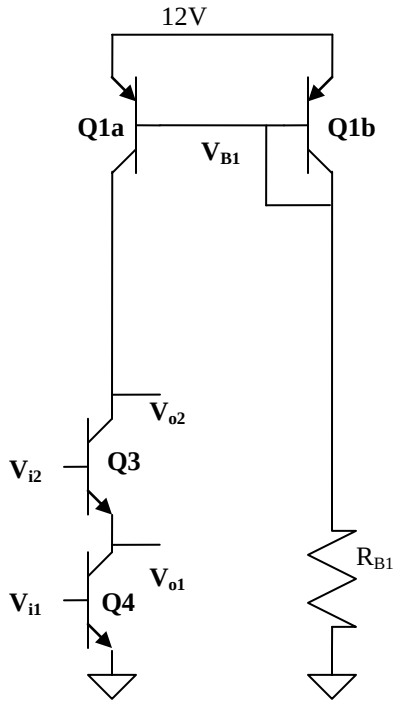

Figure 1A

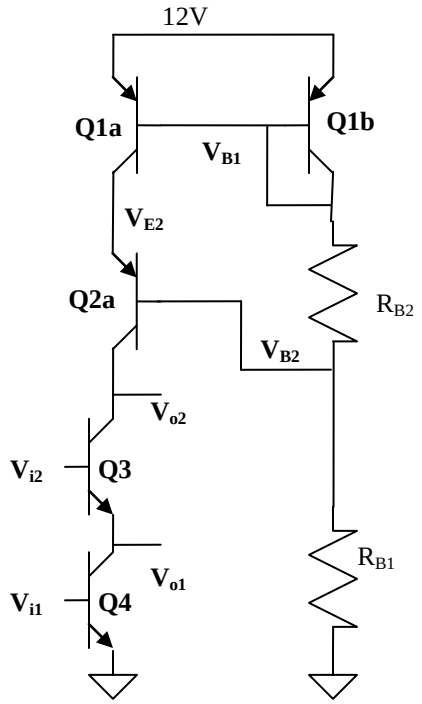

Figure 1B

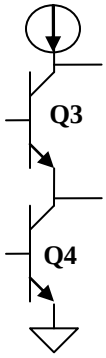

Figure 1C

1. For the circuit in Figure 1A,
   a. Estimate the voltage at node V_{B1} to within a few hundred mV (think "diode"), and the value of R_{B1} necessary so that roughly 1mA is flowing through Q1b.

V_{B1}:	**R_{B1}:**

Assume that V_{i1} is roughly 700mV, V_{i2} is roughly 1.5V, and V_{o2} is roughly 5V.

   b. Estimate the voltage at V_{o1} (again, think "diode").

V_{o1}:

   c. If V_A=20V for all devices, and all devices are at room temp, calculate the g_m and r_o for all devices

g_m:	**r_o:**

   d. Calculate the impedance seen "looking up" and "looking down" at output2, and the approximate overall impedance at that node

R_{o2up}:	**R_{o2down}:**	**R_{o2}:**

e. Calculate the impedance seen "looking up" and "looking down" at output1, and the approximate overall impedance at that node

R_{o1up}:	**R_{o1down}:**	**R_{o1}:**

f. Calculate the expected output pole frequency for output 2 with a 100pF load.

ω_{p2}:

g. Calculate the block GM from input1 to output1 and output2

G_{M11}:	**G_{M12}:**

h. Calculate the block GM from input2 to output1 and output2

G_{M21}:	**G_{M22}:**

i. Calculate the expected low-frequency gain from input1 to both outputs, and from input 2

A_{V11}:	**A_{V12}:**
A_{V21}:	**A_{V22}:**

2. Now build circuit 1A, and try to measure those four gains. From your calculations, hopefully you found that the gain from in1 to out2 is close to 1000, so it's going to be tough to bias that one!
   a. Start with a DC bias of 1.5V on in2, and play with the DC bias on in1 until the output is between 2 and 10V. At that bias point, measure the other voltages:

V_{B1}:	**V_{o1}:**	**V_{o2}:**

Make sure that they make sense, relative to what you calculated. It's always a good idea to go back and "sanity check" these voltages as you're making your gain measurements.

   b. Measure the four low-frequency gains, and calculate the difference from what you estimated above. **Turn in a single plot with a sine wave on input1, showing the sine waves on outputs 1 and 2; and a separate plot for input2 driving outputs 1 and 2**.

A_{V11}:	**% difference:**	**A_{V12}:**	**% difference:**
A_{V21}:	**% difference:**	**A_{V22}:**	**% difference:**

   c. For the gain from in1 to out2, with a 100pF load on out2, find the pole frequency, and the frequency where the gain has dropped by a factor of 10 from it's peak (-20dB down). Estimate the unity gain frequency.

ω_{p12}:	**ω_{-20dB}:**	**ω_1:**

3. Now we move on to a really high gain circuit, Figure 1B. If we want V_{E2} to be about 0.5 to 1V below the top rail, what voltage do we need to apply at V_{B2} (think "diode" again) and what value do we need for R_{B2}?

V_{B2}:	**R_{B2}:**

Your G_Ms will be the same as for 1A, but the R_os go up a lot.

   a. Calculate R_{o1} and R_{o2}

R_{o1}:	**R_{o2}:**

   b. Calculate the expected output pole frequency for output2 with a 100pF load.

ω_{p2}:

c. Calculate your expected gains

A_{V11}:	**A_{V12}:**
A_{V21}:	**A_{V22}:**

4. Now build the circuit in Figure 1B. Measuring the gains for this circuit is going to be hard, as you try to keep all of the devices in forward active. You might want to try some resistive biasing, use potentiometers, capacitive coupling to the inputs, resistively or capacitively divide-down your input signal, etc. **Describe in your lab write-up how you made your measurements**. Draw any circuits that you used to make your measurements and include them in your writeup. Show your measured bias point values, and again, turn in a two plots from the oscilloscope: one showing a sine wave driving in1, the other showing a sine wave driving in2. Note that for the input driving in1, you probably will not be able to show that one directly, so you'll need to indicate in your report what exactly you measured in your circuit to know what that value was. From your plots,
   a. Measure the four gains and calculate the difference from what you estimated in 3b

A_{V11}:	**% difference:**	**A_{V12}:**	**% difference:**
A_{V21}:	**% difference:**	**A_{V22}:**	**% difference:**

   b. As in part 2c, for the gain from in1 to out2, with a 100pF load on out2, find the pole frequency, and the frequency where the gain has dropped by a factor of 10 from it's peak (-20dB down). Estimate the unity gain frequency

ω_{p12}:	**ω_{-20dB}:**	**ω_1:**

   c. Did the unity gain frequency change from the circuit in Figure 1A to the circuit in Figure 1B? Why? The low frequency gain changed a lot. Why?