EECS 120 **Fall 2004**

Demo 3 Solutions

1. (a) $y(t) = 2y_0(t)$

(b) $y(t) = y_0(t) - y_0(t-2)$

(c) $y(t) = y_0(t-1)$

(d) We have : $x(t) = x_0(-t)$, $h(t) = h_0(t)$ so that:

$$y(t) = \int_{\tau=-\infty}^{\infty} x(\tau)h(t-\tau)d\tau = \int_{\tau=-\infty}^{\infty} x_0(-\tau)h_0(t-\tau)d\tau$$

Not enough information to determine y(t). Consider two cases for $x_0(t)$ and $h_0(t)$ below:

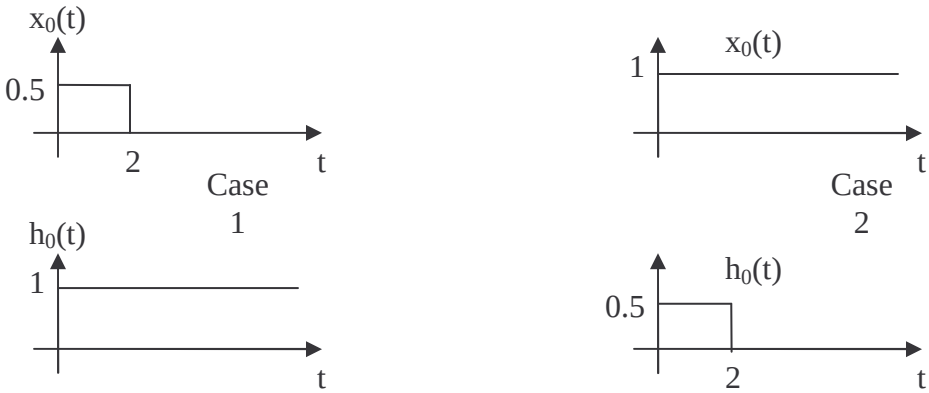

Both of the above cases result in the same $y_0(t)$ as illustrated in figure P2.47. However, if we let $x(t) = x_0(-t)$ then the y(t) will be different for the two cases as illustrated below:

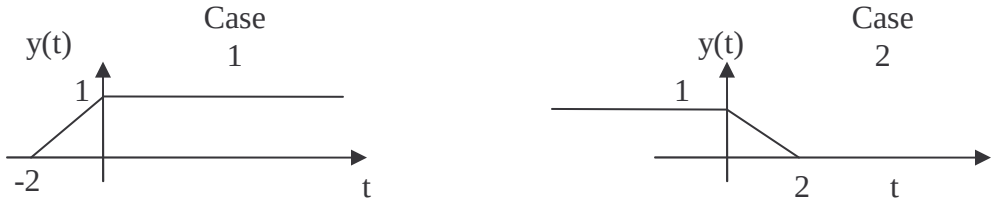

(e) $x(t) = x_0(-t)$, $h(t) = h_0(-t)$

$$y(t) = \int_{\tau=-\infty}^{\infty} x(\tau)h(t-\tau)d\tau = \int_{\tau=-\infty}^{\infty} x_0(-\tau)h_0(\tau-t)d\tau = \int_{\tau=-\infty}^{\infty} x_0(\tau)h_0(-t-\tau)d\tau$$

$= y_0(-t)$

(f) We have : $x(t) = x_0^{'}(t)$, $h(t) = h_0^{'}(t)$

$$x_0^{'}(t) = \underset{\Delta\to 0}{LIM}\frac{x_0(t+\Delta)-x_0(t)}{\Delta},\ h_0^{'}(t) = \underset{\gamma\to 0}{LIM}\frac{h_0(t+\gamma)-h_0(t)}{\gamma}$$

$$x(t)*h(t) = \underset{\Delta\to 0}{LIM}\ \underset{\gamma\to 0}{LIM}\frac{y_0(t+\Delta+\gamma)-y_0(t+\gamma)-y_0(t+\Delta)+y_0(t)}{\Delta\gamma}$$

$= y_0^{''}(t) = 0.5[\delta(t) - \delta(t-2)]$

2. (a)

For System A followed by system B:

$z[n] = nw[n] = n(1/2)^n u[n]$

For System B followed by System A:

$y[n] = z[n]*h[n]$, $z[n] = n\delta[n] = 0$,
$y[n] = 0$

(b) $z[n] = w[n] + 2$

For System A followed by System B:

$z[n] = (1/2)^n u[n]+2$

For System B followed by System A:

$z[n] = \delta[n] + 2$

$$y[n] = (1/2)^n u[n] + 2\sum_{k=0}^{\infty}(\frac{1}{2})^k = (1/2)^n u[n] + 4$$

3. (a) S1: $y_1[n] = 0.5x_1[n] - 2.5x_1[n-4]$
S2: $y_2[n] = 0.5y_2[n-1] - 0.5y_2[n-3] + x_2[n]$

$y_2[n] = 0.5y_2[n-1] – 0.5y_2[n-3]+ 0.5x_1[n] – 2.5x_1[n-4]$

$2y_2[n] - y_2[n-1] + y_2[n-3] = x_1[n] – 5x_1[n-4]$

(b) S1:

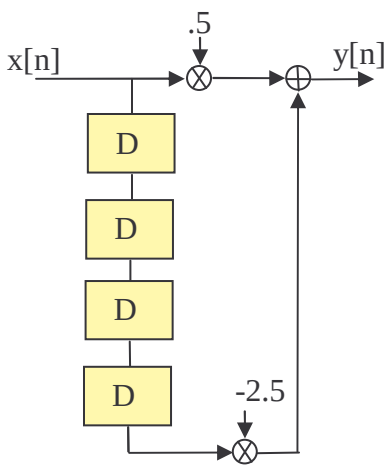

(c) S2:

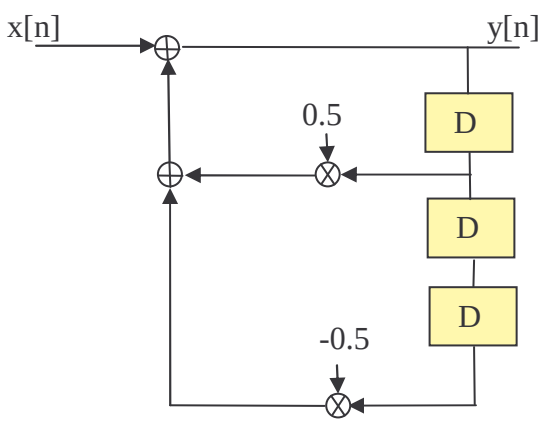

(d)

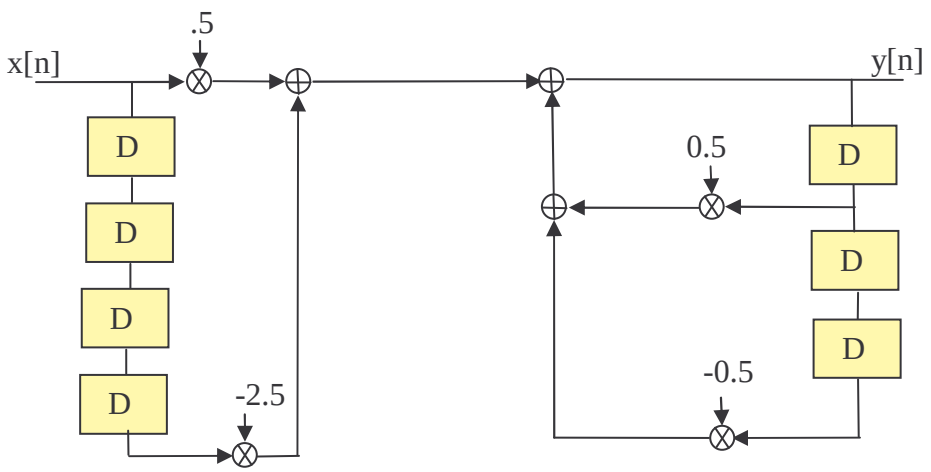

(e)

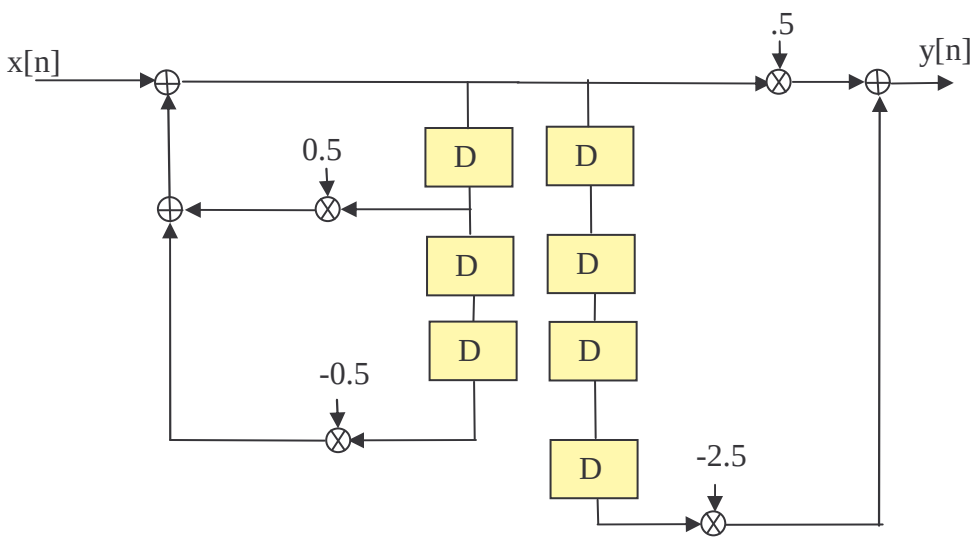

(f)

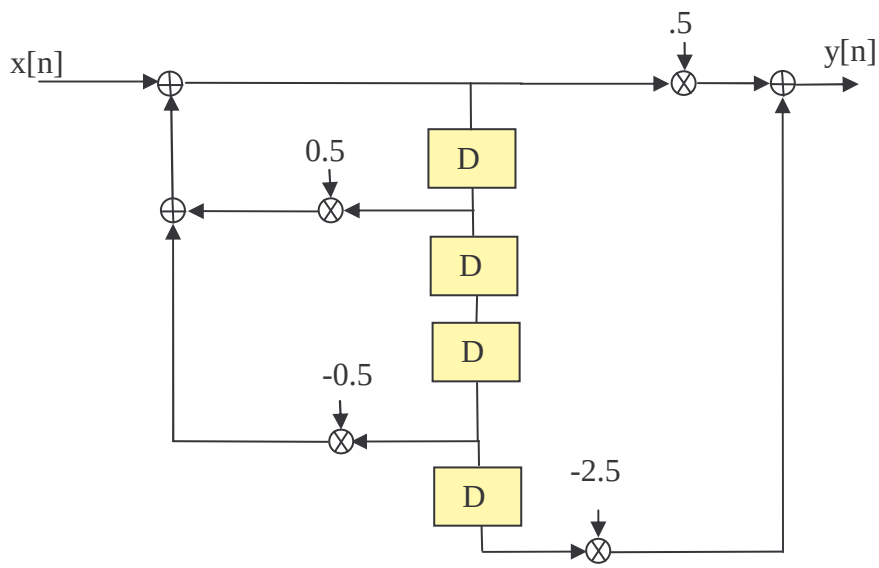

4. $\int_{\tau=-\infty}^{\infty} g(\tau)u_1(\tau)d\tau = -g'(0)$

Define $g(\tau) = x(t-\tau)$ for some fixed t.

=> $\int_{\tau=-\infty}^{\infty} x(t-\tau)u_1(\tau)d\tau = -x'(t)$

(b) Show that $f(t)u_1(t) = f(0)u_1(t) - f'(0)\delta(t)$

For any g(t) that is continously differentiable at t=0:

$$\int_{-\infty}^{\infty} g(\tau)f(\tau)u_1(\tau)d\tau = -\frac{d}{dt}[g(t)f(t)]|^{t=0} = -g'(0)f(0) - g(0)f'(0)$$

$$\int_{-\infty}^{\infty} g(\tau)f(0)u_1(\tau)d\tau - \int_{-\infty}^{\infty} g(\tau)f'(0)\delta(\tau)d\tau =$$

$$-f(0)g'(0) - g(0)f'(0)$$

(c) $\int_{-\infty}^{\infty} x(\tau)u_2(\tau)d\tau = x''(0)$

Let g(t) be an arbitrary function that is twice differentiable at 0.

$$\int_{-\infty}^{\infty} g(\tau)f(\tau)u_2(\tau)d\tau = \frac{d^2}{dt^2}[g(t)f(t)]|^{t=0} = \frac{d}{dt}[g'(t)f(t)+g(t)f'(t)]|^{t=0}$$
$$= g''(0)f(0)+g'(0)f'(0)+g'(0)f'(0)+g(0)f''(0)$$
$$= g''(0)f(0)+2g'(0)f'(0)+g(0)f''(0)$$

This would also result from

$$f\ \ (0)u_2(t)-2f'(0)u_1(t)+f''(0)\delta(t)$$