EECS 122, Lecture 21
Introduction to Security

EECS 122

University of California
Berkeley

Security

- Examples of Attack
- Principles
- Threats
- Cryptography
- Security Systems

Attacks

- Buffer Overflow
- Denial of Service Attack
- Email virus
- ARP attack

Buffer Overflow

- Basic Mechanism:
  Attacker overwrites program stack to force execution of her code
- Examples:
  - Virus
  - Corrupt files

Buffer Overflow - Illustration

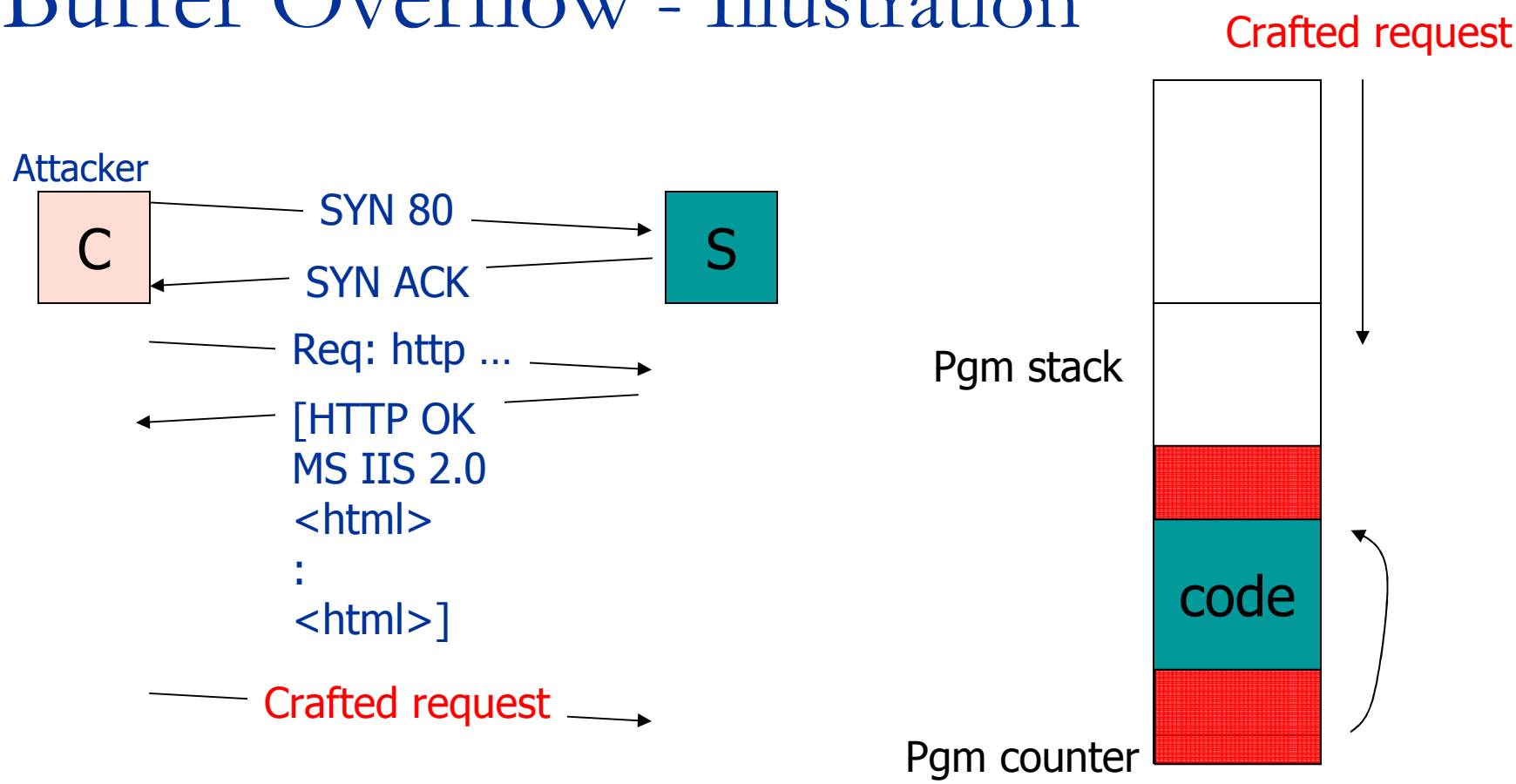

Request overflows program counter
→ Forces execution of "code"

Buffer Overflow - Remedies

- Protect memory by preventing overwrite of stack [either through OS or through language]
- Check validity of request

Denial of Service – SYN Flood

- Basic Mechanism
  - Flood a host with a rapid sequence of SYNs
- Effect
  - Host sets aside some space to store state of new TCP connection
  - If rapid sequence, then host runs out of space and crashes
- Remedies
  - Check for “valid” SYNs, i.e., SYNs followed by requests; discard invalid SYNs to clear memory
  - Use smart firewall that forwards only valid SYNs to hosts
  - Store “state” in cookie that comes back with request

Denial of Service – DDOS

Distributed Denial of Service Attack

- Basic Mechanism
  - Saturate a link to a host by sending requests from many nodes across the Internet
- Effect
  - Host is incapacitated
- Remedies
  - Verify that source IP exists (i.e., is not spoofed)
  - Block packets that DDOS tools use (some ICMPs)
  - Limit rate of ICMP flows
  - Limit rate of SYNs
  - Trace back from last router upstream to block packets toward that link

Email

- Basic Mechanism
  - Attachment that contains virus
- Effect
  - Some email programs execute code in virus without authorization
- Remedies
  - Firewall to check attachments and remove specific ones
  - Avoid automatic execution of attachments

ARP

- Basic Mechanism
  - Intruder replies to ARP request and performs denial of service on host
    A → [ARP: Who is IP B]
    C → [ARP: I am IP B]; DoS B
- Effect
  C impersonates B for A
- Remedies
  - Check source of ARP
  - Avoid DoS

Principles

- You would somehow like to have your data (or that of others) be secure. This often means you want to:
  - know who really sent it
  - know nobody else read it
- More specifically, protect from:
  - eavesdropping, masquerading, replay, traffic analysis, exploit-based attacks, denial-of-service

Principles

- These attacks are often classified as
  - Active:
    - somebody actually generates or modifies network traffic
    - easier to detect, harder to prevent
  - Passive:
    - somebody just collects and analyses network traffic
    - harder to detect, easier to prevent

Threats

Against	Type	Protection
Computers	Physical Infection Intrusion	Physical security (lock) Virus detection Firewall, passport control
Users	Identity Privacy	Signature, password, watermark Encryption, relay
Documents	Integrity Confidentiality	Message authentication code Encryption

Cryptography

- Basic Mechanism
- Main Issues
- Secret Key
- Public Key
- Hashing

Basic Mechanism

P -> [E(.)] -> C -> [D(.)] -> P

Decryption function

Cyphertext: Sent (Encrypted Text)

Encryption function

Plaintext

Basic Mechanism

P → [E(.)] → C → [D(.)] → P

Bob Channel Alice

- Two flavors:
  - Secret Key: E(.) and D(.) are known only to Bob and Alice
  - Public Key: Alice advertises E(.) that should be used to encrypt messages to her

Basic Mechanism

P -> [E(.)] -> C -> [D(.)] -> P

D(.) is the inverse of E(.)

E(.) should be a "one-way function"

- Easy to compute
- Hard to invert:
  - Looking at E(P) it should be hard to get P
  - Looking at many E(P), it should be hard to figure out the function D(.), or
  - Knowing many pairs (P, E(P)), it should be hard to figure out the function D(.)

Main Issues

- For the cryptographer, the main issues:
  - choice of the transformation (D and E)
    - is the underlying mathematical basis efficient for decoding and encoding with keys and hard without them?
    - do you publish the algorithm or not?
  - generation and distribution of keys
    - might like to use random numbers, but computers aren't exactly random devices
    - how do you get a secret from one person to another if you don't already have keys!?

Main Issues

- For the cryptanalyst, the main issues:
  - what is already known?
    - algorithm, plaintext-ciphertext pairs, any information about generation of the keys
  - types of attacks
    - ciphertext only (freq analysis, brute force)
    - known plaintext
    - chosen plaintext

Secret Key

$$E(.) = E(.; K), D(.) = D(.; K)$$

where K is a shared secret: Key distribution

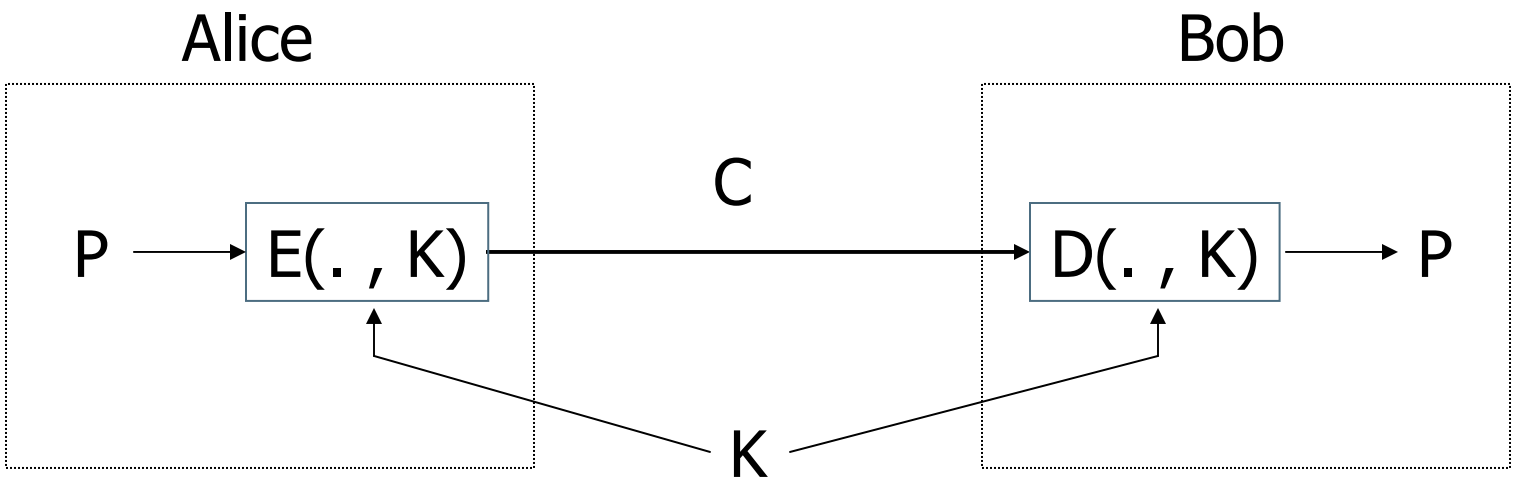

Secret Key

- EXAMPLE 1: One-Time PAD:

$$C = P + K$$

(addition bit-by-bit modulo 2, no carry)

K = random string of bits (50% = 0, 50% = 1)

If used only once, this is a perfect code! (C is perfectly random and contains no information about P.)

Application: Top Secret transmissions. K is stored in a CD-ROM that is delivered securely ahead of time.

Secret Key

- EXAMPLE 2: Data Encryption Standard - DES

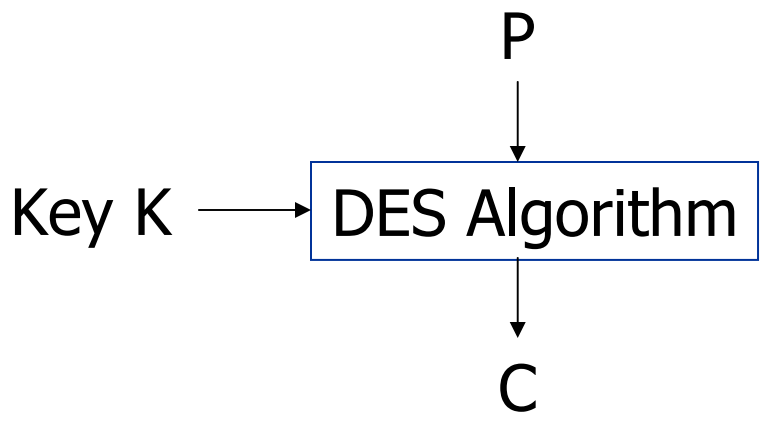

Algorithm is known, but the key is secret

K = 40 bits => Weak
56 bits => Marginal
128 bits => Safe

Secret Key

- Note: DES Modes of Encryption

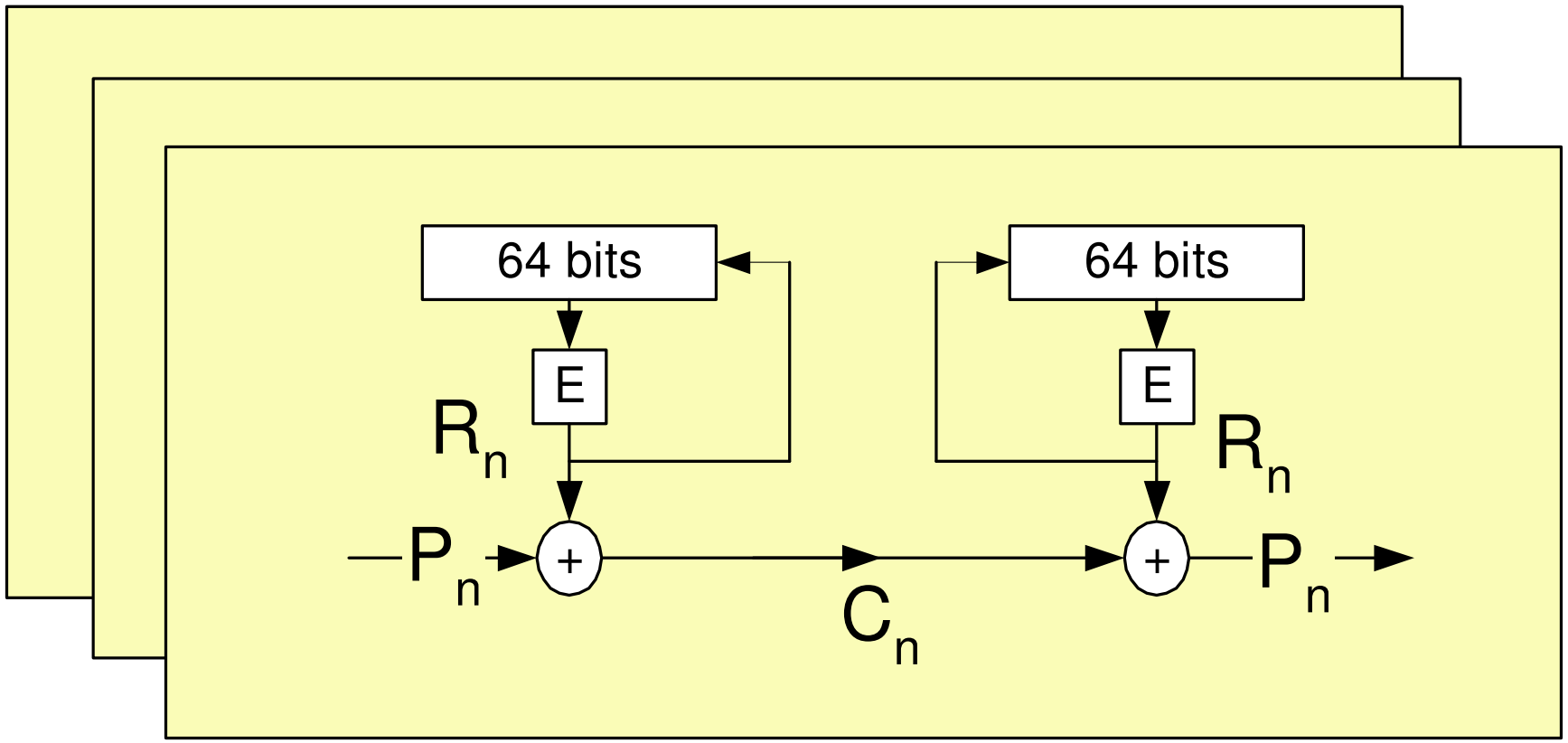

Secret Key

- Note: DES Modes of Encryption

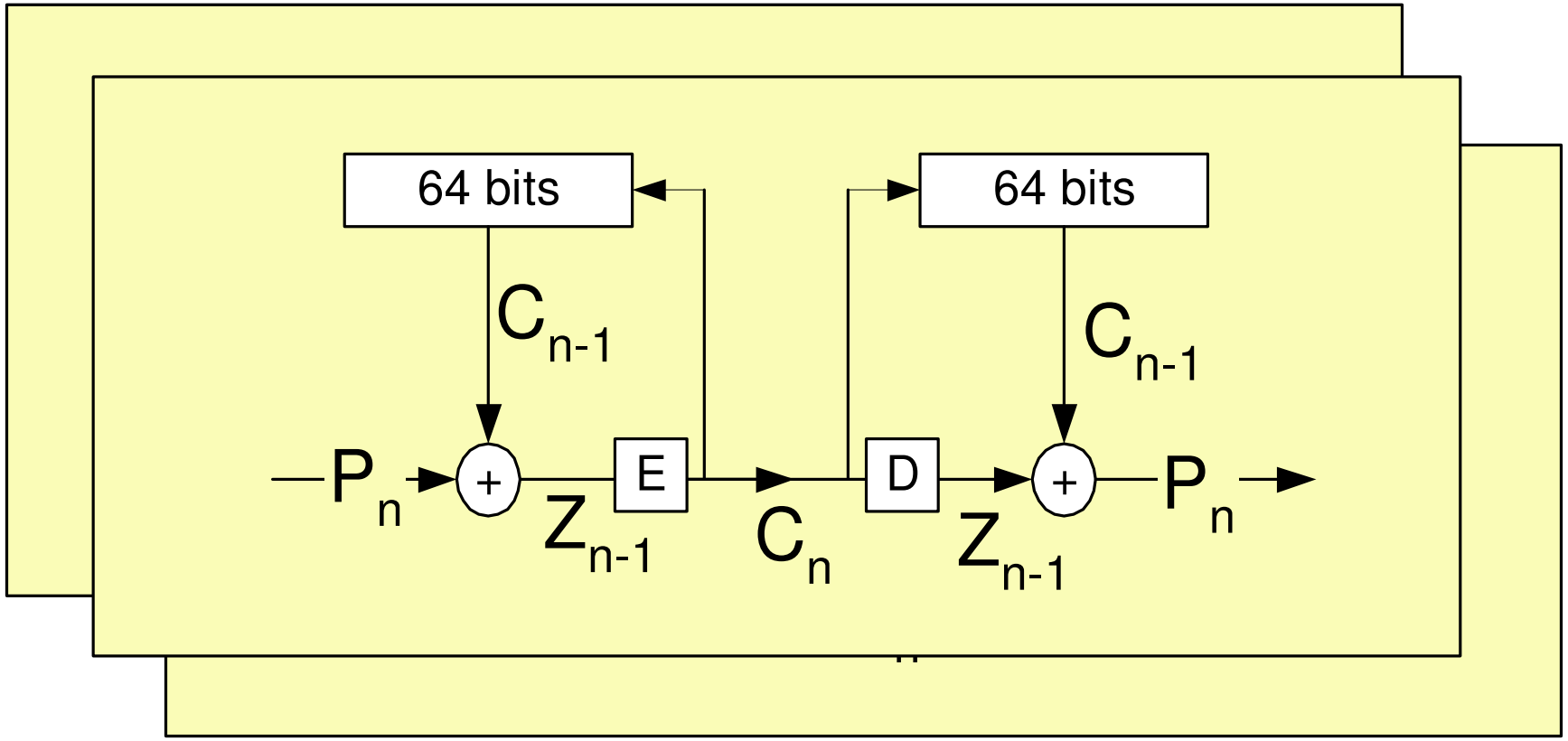

Secret Key

- Note: DES Modes of Encryption

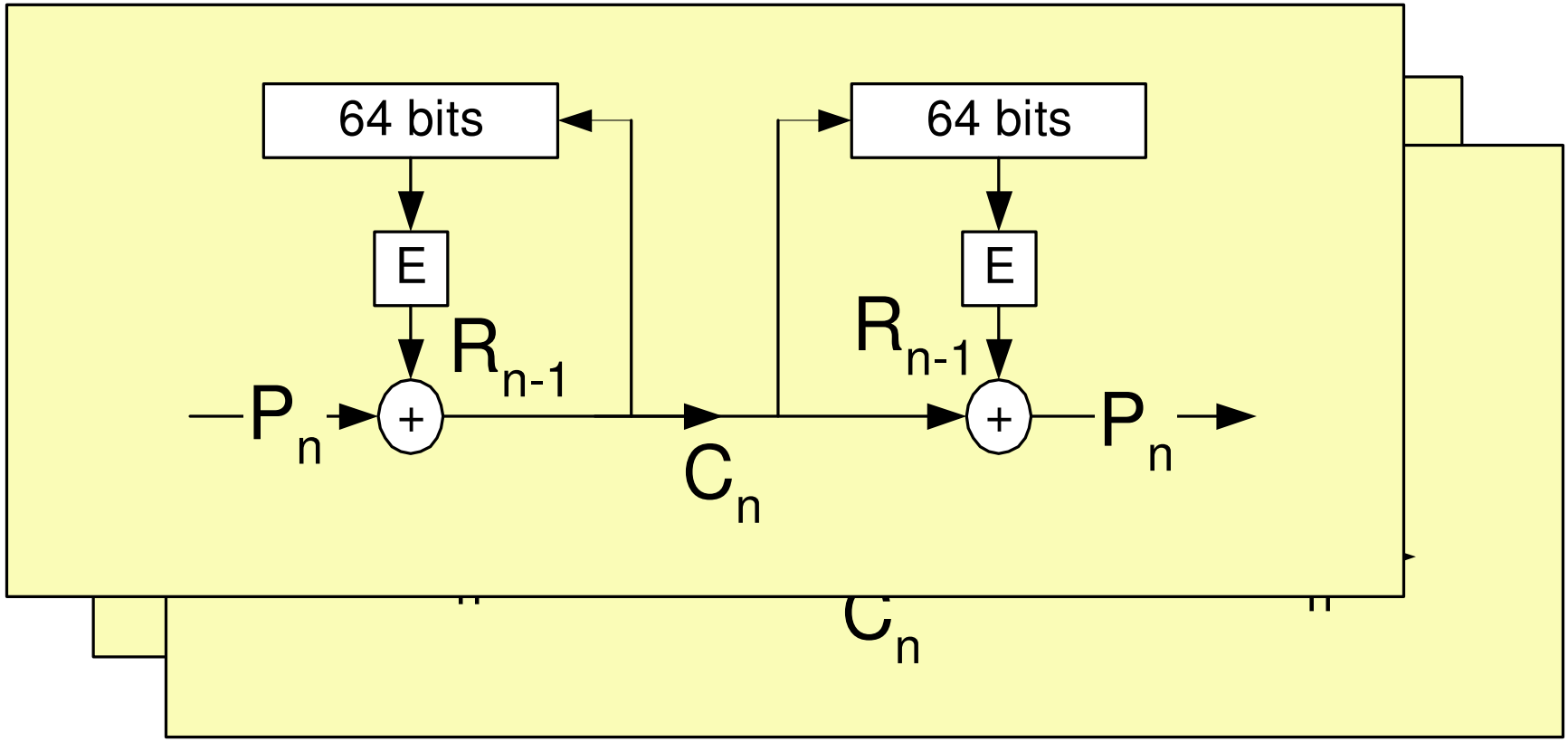

Public Key

- Bob: use E(.; Bob) to talk to me.
- Only Bob knows D(.; Bob).
- Trapdoor one-way function.

Example: Rivest-Shamir-Adleman:

p, q prime; n = pq; z = (p-1)(q-1) and e coprime;
d s.t. ed = 1 mod z.

If P in {0, 1, ..., n-1} and C = P^e mod n,
then C^d mod n = P.
(e, n) public. (d, n) private.
Finding d from (e, n) is *believed* to be hard.

Hashing

- H(P) short (e.g., 160 bits).
- Hard to find P and P' s.t. H(P) = H(P').

Security Systems

- Integrity
- Key Management
- Identification

Integrity

Alice sends P*H(P) where H(P) is protected by

- a. Authentic channel.
- b. Message Authentication Code:
  - Note that E(H(P); K) with K secret may not be secure. For instance, Z = H(P)+R is not secure since then Eve can compute H(P) from P and R from Z + H(P) and then Eve can send P' and H(P')+R.
  - Secure: H(K2*H(K1*P)) where K1 and K2 are secret to Alice and Bob, since Eve cannot compute H(K1*P').

Integrity

Alice sends P*H(P) where H(P) is protected by

- c. Digital Signature.

Alice sends C = D(P; Alice) and Bob recovers P = E(C; Alice).

However, if Eve constructs C' and computes P' = E(C'; Alice), Bob will think that Alice sent D(P'; Alice).

Instead, Alice should send D(P*H(P); Alice) because it is unlikely that Eve can find some C' so that E(C'; Alice) has the form P'*H(P') for some P'.

Key Management

To share a secret K:

- a. **Hand-delivery**
- b. **Encrypt and distribute K** using some other secret key (e.g., Kerberos)
  - Shared Key with Kerberos
  - Get Login Key
  - Get Session Key.
- c**. Use a public key to distribute secret key K** (e.g., PGP)

Key Management

- **d. Public key agreement: Diffie-Hellman:**

  Alice and Bob agree on public (z, p).
  Alice chooses a and Bob chooses b.
  Alice computes A = z^a mod p and sends it to Bob.
  Bob computes A^b mod p.
  Bob computes B = z^b mod p and sends it to Alice.
  Alice computes B^a mod p.
  One can show that

  A^b mod p = B^a mod p = z^(ab) mod p =: K.

  Indeed: A = z^a + mp so that A^b = (z^a + mp)^b = ... = z^(ab) mod p.

Key Management

- However, D-H is not robust to a "person-in-the-middle" attack.
  - Indeed: Imagine Eve gets in the middle and plays the role of Alice.

- Solution: Signing the exchange:
  - Alice sends A to Bob and Bob sends B to Alice
  - Alice signs (A, B) and sends it to Bob
  - Bob signs (A, B) and sends it to Alice
  - Eve cannot fake these signatures.

Identification

Bob wants to ascertain the identity of Alice.

- a. Passwords: Alice has a secret password K and sends (Alice, K). Bob maintains H(K) to verify Alice. However: can be intercepted.
- b. Challenge/Response: Bob sends string X to Alice who computes f(X, K) where K is a secret that Alice and Bob share.
  However, Bob must know K.
- c. Public Key: Bob chooses X and sends E(X; Alice) to Alice who computes X and sends it back to Bob.
- d. Digital signature: Bob sends X to Alice who signs it and returns it to Bob.

Secure Shell (SSH)

- Provides remote login and file transfer service
- Consists of 3 protocols:
  - SSH-TRANS creates TCP based secure channel using RSA to establish a session key
  - SSH-AUTH is used for authenticating client
  - SSH-CONN is used to run other insecure applications over a SSH tunnel using port forwarding

Secure Socket Layer (SSL)

- Provides Transport Layer Security (TLS)
- Creates a layer between Application and TCP layers
- When HTTP makes use of this, it's called HTTPS
- Includes 2 parts
  - Handshake protocol to negotiate various communication parameters (cryptographic parameters, certificates, session key, integrity and compression schemes, etc.)
  - Record protocol for actual data transfer

IPsec

- Provides security at network layer
- It can be used in 2 modes
  - Transport mode
    - IPsec header is inserted after the IP header
    - Authentication Header (AH) provides integrity but no encryption
    - Authentication data includes some fields of IP header that don't change
  - Tunnel mode
    - Entire IP packet is encapsulated in a new IP packet
    - Especially useful when tunnel ends at a point other than final destination
    - Encapsulating Security Payload (ESP) header provides almost all the features of AH, and also provided encryption