EE 123
Anant Sahai

University of California, Berkeley
February 15, 2007

# Digital Signal Processing

# Midterm 1 Solution

**Instructions**

- Total time allowed for the exam is 80 minutes
- Some useful formulas:
  - Discrete Time Fourier Transform (DTFT)

$$X(e^{j\omega}) = \sum_{n=-\infty}^{\infty} x[n]e^{-j\omega n}$$

  - Inverse Fourier Transform

$$x[n] = \frac{1}{2\pi}\int_{-2\pi}^{2\pi} X(e^{j\omega})e^{j\omega n}d\omega$$

  - Z Transform

$$X(z) = \sum_{n=-\infty}^{\infty} x[n]z^{-n}$$

**1.** (*20 points*) Match each of the pole-zero plots to the corresponding magnitude and phase plots given below. Write your answer in the space provided below each magnitude and phase plot.

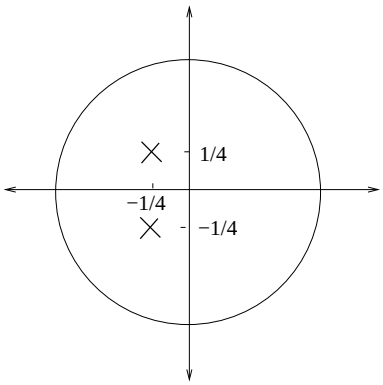


(a)

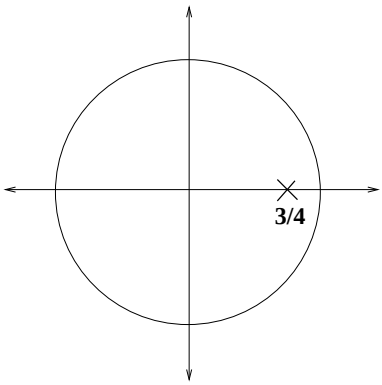


(b)

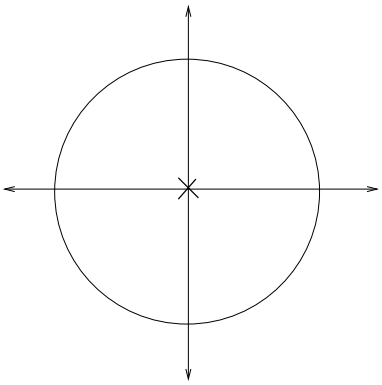

(c)

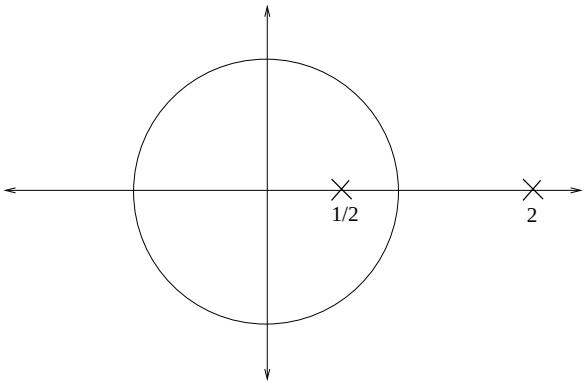


(d)

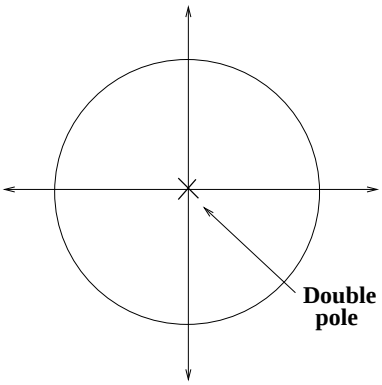


(e)

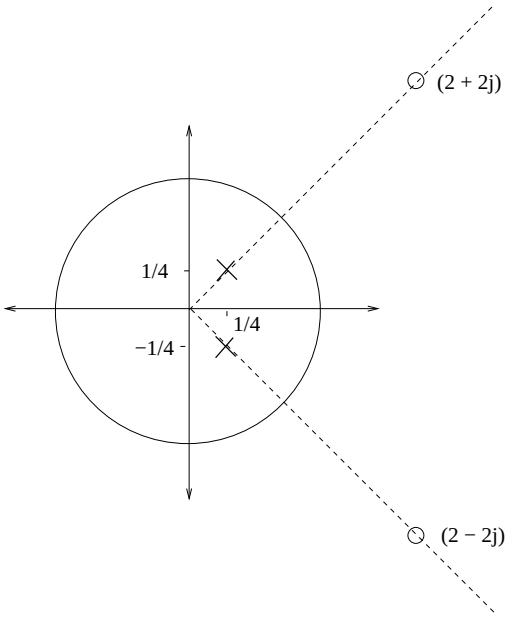


(f)

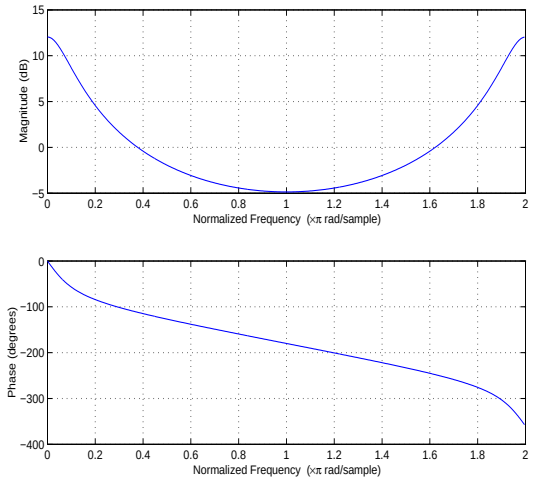


(1)-(b)

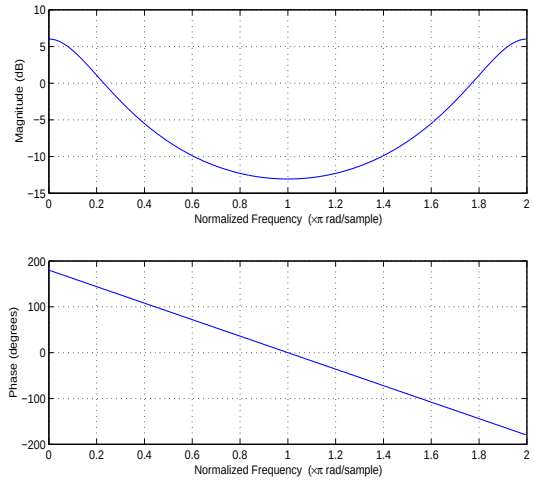


(2)-(d)

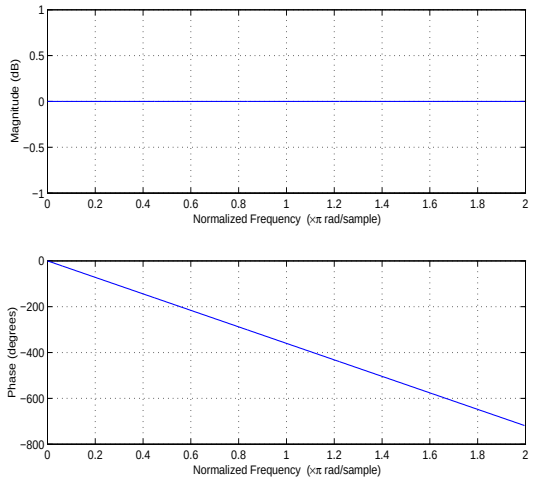


(3)-(e)

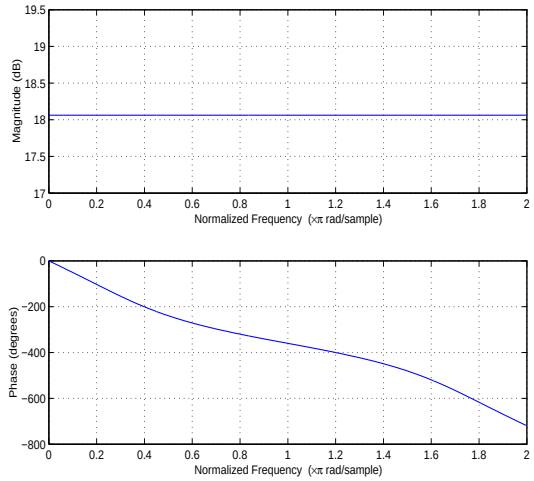


(4)-(f)

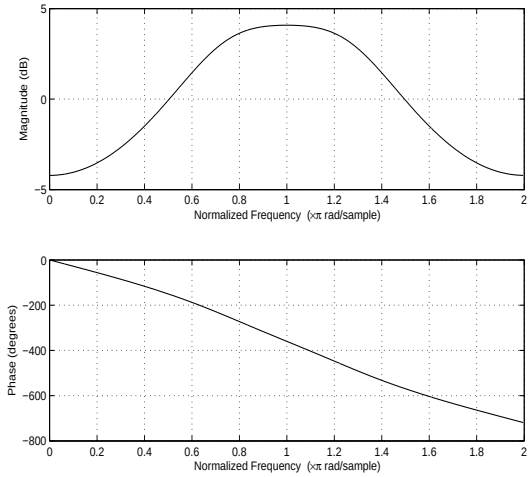


(5)-(a)

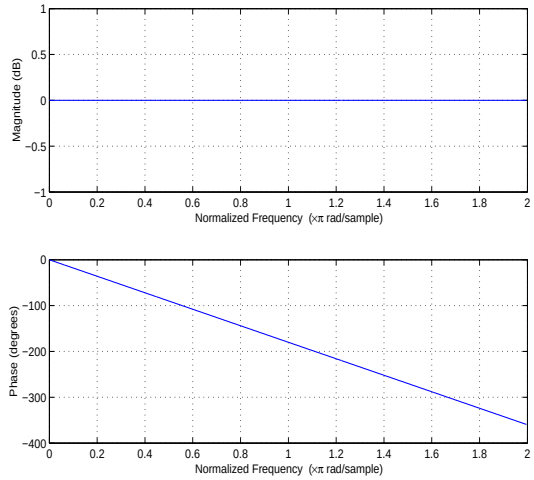


(6)-(c)

**2.** (*70 points*) Consider a causal linear time-invariant system with impulse response $h[n]$. The $z$-transform of $h[n]$ is

$$H(z) = \frac{1 - z^{-1}}{1 - 0.5z^{-1}}$$

Consider the cascade configuration given in the figure below. Here we assume that $\alpha$ is a real number.

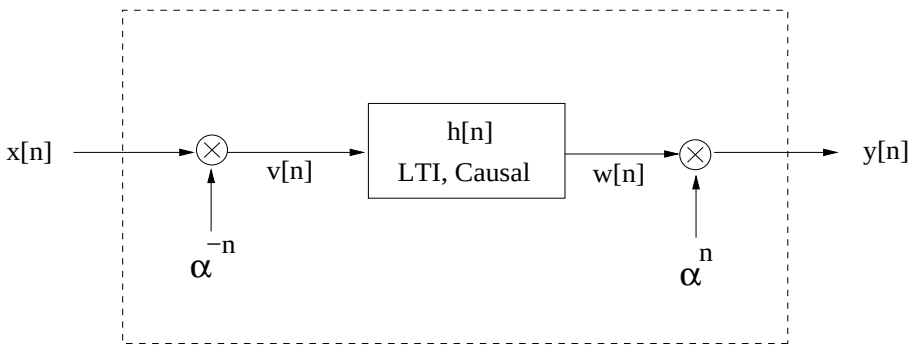


**a.** (*10 pts*) Draw the pole-zero plot of $H(z)$. Also, sketch the region of convergence. Is this system stable?

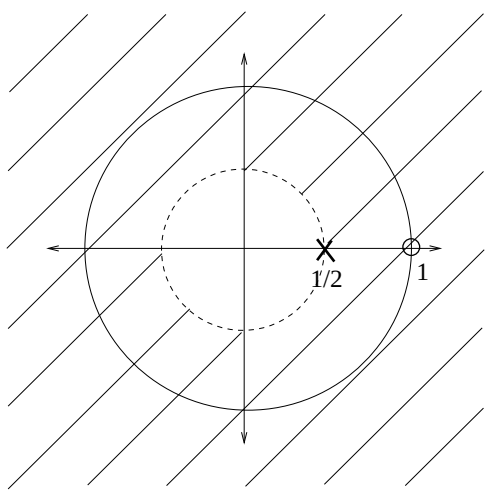


ROC: $\{z > \frac{1}{2}\}$. Since the unit circle lies in the region of convergence, the system is stable.

**b.** (*10 pts*) Assume that $\alpha = \frac{1}{3}$ and $x[n] = \left(\frac{1}{4}\right)^n u[n]$. Compute the output $y[n]$ for the above choice of input $x[n]$.

From the system diagram, we have $v[n] = \alpha^{-n}x[n]$, $w[n] = v[n] * h[n]$ and $y[n] = w[n]\alpha^n$. This implies

$$\begin{aligned} y[n] &= (v[n] * h[n])\alpha^n \\ &= \left(\sum_{k=-\infty}^{\infty} v[n-k]h[k]\right)\alpha^n \end{aligned}$$

$$
\begin{aligned}
&= \left( \sum_{k=-\infty}^{\infty} x[n-k]\alpha^{-(n-k)}h[k] \right) \alpha^n \\
&= \left( \sum_{k=-\infty}^{\infty} x[n-k]\alpha^{k}h[k] \right) \\
&= x[n] * (\alpha^n h[n])
\end{aligned}
$$

Taking the z-transform, we get

$$
\begin{aligned}
Y(z) &= X(z)H\left(\alpha^{-1}z\right) \\
&= \frac{1}{1-\frac{1}{4}z^{-1}} \cdot \frac{1-\alpha z^{-1}}{1-0.5\alpha z^{-1}} \\
&= \frac{1}{1-\frac{1}{4}z^{-1}} \cdot \frac{1-\frac{1}{3}z^{-1}}{1-\frac{1}{6}z^{-1}} \\
&= \frac{-1}{1-\frac{1}{4}z^{-1}} + \frac{2}{1-\frac{1}{6}z^{-1}} \qquad (1)
\end{aligned}
$$

ROC of $Y(z)$ is the intersection of the ROC of $X(z)$ and $H(z)$, which is $|z| > \frac{1}{4}$. Now, taking the inverse z-transform of (1) we have

$$
y[n] = -\left(\frac{1}{4}\right)^n u[n] + 2\left(\frac{1}{6}\right)^n u[n]
$$

**c.** (*10 pts*) Is the overall system enclosed by the dashed box linear? Explain your reasoning.

We have already shown that the output $y[n] = x[n] * (\alpha^n h[n])$. Since the input and output are related via a convolution relationship, the system is a linear and time-invariant. Moreover, the impulse response of the overall system enclosed by the dashed box is $g[n] = \alpha^n h[n]$.

**d.** (*10 pts*) Is the overall system enclosed by the dashed box time-invariant? Explain your reasoning.

See solution for part $(c)$.

**e.** (*10 pts*) Find the response $g[n]$ of the overall system within the enclosed box to the input $x[n] = \delta[n]$.

Again from part $(c)$, we have $g[n] = \alpha^n h[n]$.

**f.** (*10 pts*) Plot the pole-zero plot of $G(z)$, the $z$-transform of $g[n]$. Also, sketch the region of convergence.

We know that $g[n] = \alpha^n h[n]$. This implies

$$\begin{aligned} G(z) &= H\left(\alpha^{-1} z\right) \\ &= \frac{1 - \frac{1}{3}z^{-1}}{1 - \frac{1}{6}z^{-1}}, \qquad \text{ROC}: \ \{|z| > \frac{1}{6}\} \end{aligned}$$

The pole-zero plot of $G(z)$ is shown in the figure below.

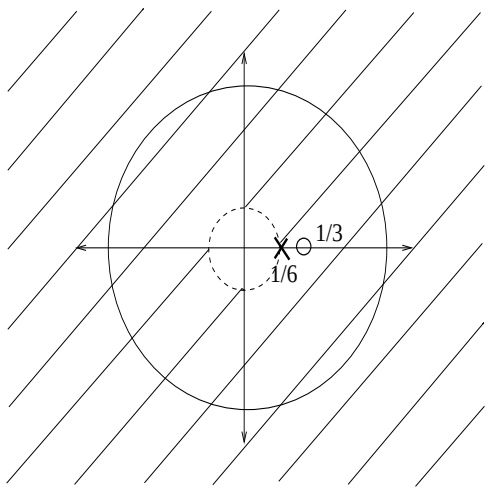


**g.** (*10 pts*) What happens to the pole-zero plot in part (**f**) if $\alpha = e^{-j\omega_0}$, for some real number $\omega_0$.

If $\alpha = e^{-j\omega_0}$, then the poles and zeros of $G(z)$ are obtained by rotating the corresponding poles and zeros of $H(z)$ by $\omega_0$ degrees in the clockwise direction. The region of convergence is $\{|z| > 0.5\}$.

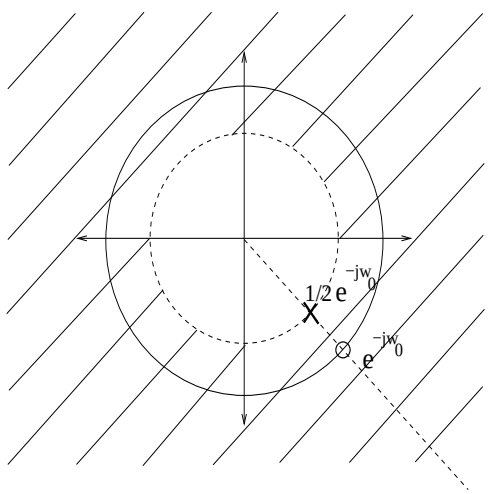

**3.** (*40 points*) A real-valued signal $x(t)$ is known to be band-limited, i.e., $X(j\omega) = 0$, for $|\omega| > W$. $x(t)$ is first mixed by multiplying by $\cos(\omega_0 t)$. The resulting signal $v(t)$ is sampled uniformly (sampling time $T$) using the architecture given in the figure below. The periodic impulse train used for sampling is

$$s(t) = \sum_{n=-\infty}^{\infty} \delta(t - nT)$$

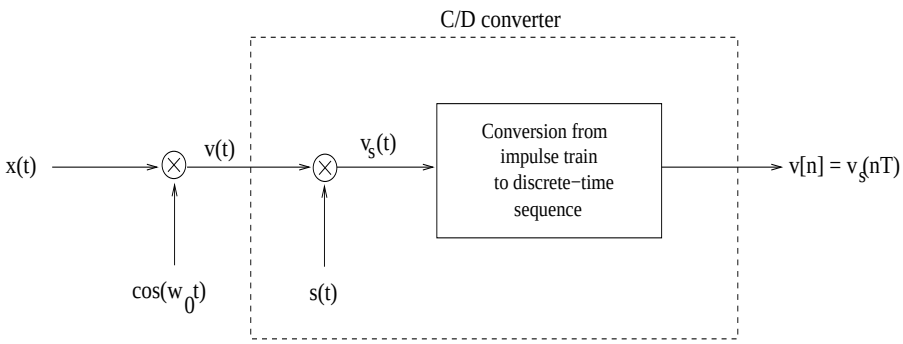


Assume that $x(t) = \frac{\sin Wt}{Wt}$ and $\omega_0 = 2W$.

**a.** (*10 pts*) Compute and draw $X(j\omega)$, the Fourier transform of $x(t)$.

$$X(j\omega) = \left\{ \begin{array}{cc} \frac{\pi}{W}, & -W \leq \omega \leq W \\ 0 & \text{otherwise} \end{array} \right\}$$

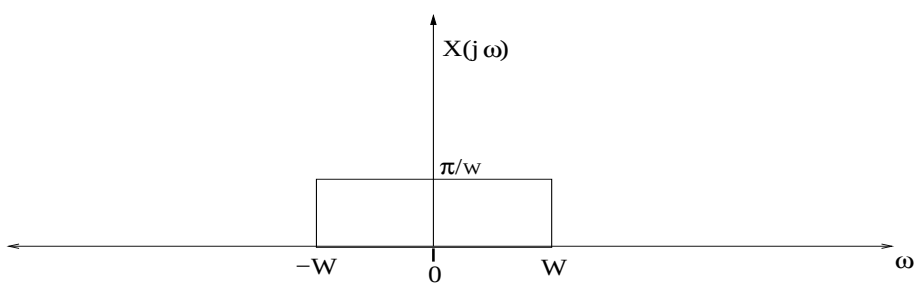


**b.** (*10 pts*) Compute and draw $V(j\omega)$, the Fourier transform of $v(t)$.

$$\begin{aligned} v(t) &= x(t)\cos(j\omega_0) \\ \Rightarrow V(j\omega) &= \frac{1}{2}\left[X(j(\omega+\omega_0)) + X(j(\omega-\omega_0))\right] \end{aligned}$$

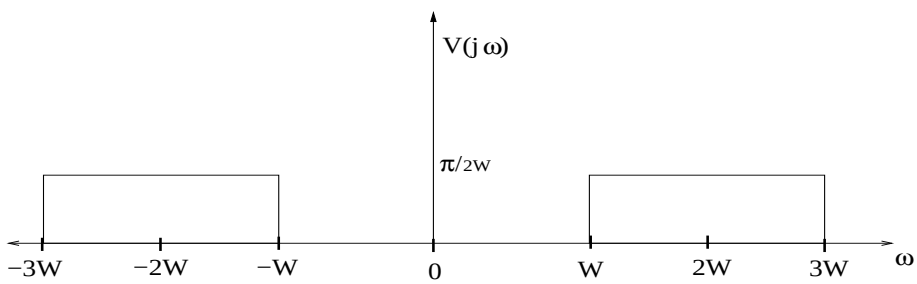


**c.** (*10 pts*) Compute and draw $V_s(j\omega)$, the Fourier transform of $v_s(t)$.

$$\begin{aligned} v_s(t) &= v(t)s(t) \\ \Rightarrow V_s(j\omega) &= \frac{1}{2\pi}[V(j\omega) * S(j\omega)] \\ &= \frac{1}{T}\left[\sum_{k=-\infty}^{\infty} V(j(\omega - \Omega k))\right] \end{aligned}$$

where $\Omega = \frac{2\pi}{T}$. The Fourier transform $V_s(j\omega)$ is shown in Fig. 1.

(**d**) What is the minimum sampling rate $\Omega = \frac{2\pi}{T}$ required to reconstruct the original signal $x(t)$ from the discrete time signal $v_s[n]$.

The maximum frequency component of $v(t)$ is $3W$. Hence, from the Nyquist sampling theorem it is obvious that we can reconstruct $x(t)$ for sampling rates $\Omega > 6W$. Again from Nyquist sampling theorem, it is clear that we cannot recover $x(t)$ at a sampling rate $\Omega < 2W$. Now, the only question is whether we can recover $x(t)$ for sampling rates $2W \leq \Omega \leq 6W$. From Fig. 1 it is clear that if $\Omega = 2W$, the adjacent copies of $X(j\omega)$ don't overlap. In this case we can reconstruct $x(t)$ by passing $v_s[n]$ through an ideal low-pass filter.

For $\Omega > 2W$, it is possible to reconstruct $x(t)$ from the samples $v_s[n]$, inspite of the overlap of the adjacent copies of $X(j\omega)$. The reconstruction process in this case is more than just low-pass filtering.

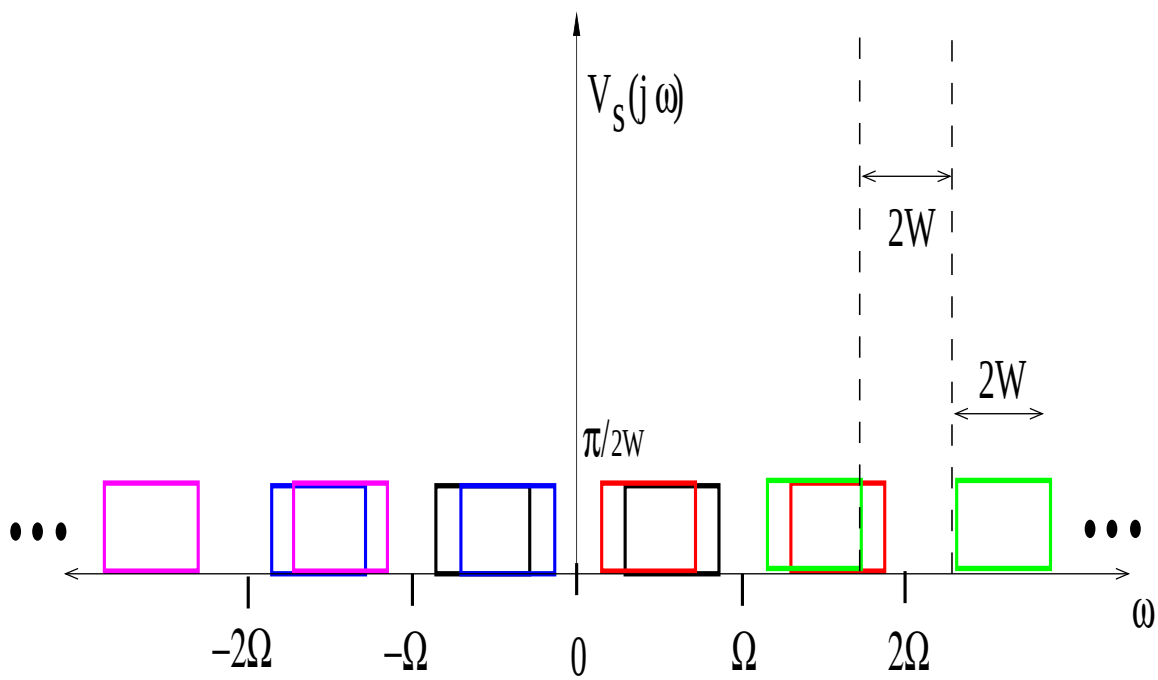


Figure 1: The Fourier transform $V_s(j\omega)$. The figures corresponds to the case when the sampling frequency $\Omega = 3.5W$. The different colors represent the copies of $V(j\omega)$ repeated periodically due to sampling.