UC Berkeley

EE128 Homework #4

Due on 10/20/06

(1) Textbook problem 5.6 (g)

6. *Multiple poles at the origin* Sketch the root locus with respect to K for the equation $1 + KL(s) = 0$ and the following choices for $L(s)$. Be sure to give the asymptotes, arrival and departure angles at any complex zero or pole, and the frequency of any imaginary-axis crossing. After completing each hand sketch verify your results using MATLAB. Turn in your hand sketches and the MATLAB results on the same scales.

(g) $L(s) = \dfrac{(s+1)^2}{s^3(s+10)^2}$

(2) Textbook problem 5.10

10. A simplified model of the longitudinal motion of a certain helicopter near hover has the transfer function

$$G(s) = \frac{9.8(s^2 - 0.5s + 6.3)}{(s + 0.66)(s^2 - 0.24s + 0.15)}.$$

and the characteristic equation $1 + D(s)G(s) = 0$. Let $D(s) = k_p$ at first.

(a) Compute the departure and arrival angles at the complex poles and zeros.

(b) Sketch the root locus for this system for parameter $K = 9.8k_p$.Use axes -4 $\leq x \leq$ 4. $-3 \leq y \leq 3$;

(c) Verify your answer using MATLAB. Use the command axes([-4 4 -3 3]) to get the right scales.

(d) Suggest a practical (at least as many poles as zeros) alternative compensation $D(s)$ which will at least result in a stable system.

(3) Textbook problem 5.22

22. For the system in Fig. 5.55:

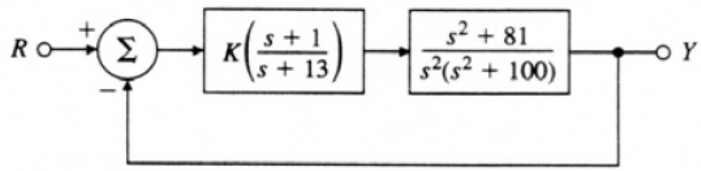

Figure 5.55: Feedback system for problem 22

(a) Find the locus of closed-loop roots with respect to K.

(b) Is there a value of K that will cause all roots to have a damping ratio greater than 0.5?

(c) Find the values of K that yield closed-loop poles with the damping ratio $\zeta = 0.707$.

(d) Use MATLAB to plot the response of the resulting design to a reference step.

(4) Textbook problem 5.33

Consider the rocket-positioning system shown in Fig.

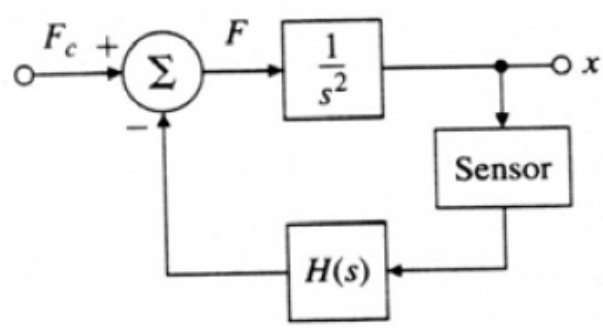

(a) Show that if the sensor that measures x has a unity transfer function, the lead compensator

$$H(s) = K\frac{s+2}{s+4}$$

stabilizes the system.

(b) Assume that the sensor transfer function is modeled by a single pole with a 0.1 sec time constant and unity DC gain. Using the root-locus procedure, find a value for the gain K that will provide the maximum damping ratio.

(5) Textbook problem 6.3 (c)

3. Sketch the asymptotes of the Bode plot magnitude and phase for each of the following open-loop transfer functions. After completing the hand sketches verify your result using MATLAB. Turn in your hand sketches and the MATLAB results on the same scales.

(c) $L(s) = \dfrac{1}{s(s+1)(0.02s+1)}$

(6) Textbook problem 6.6 (a)

.

6. *Multiple poles at the origin* Sketch the asymptotes of the Bode plot magnitude and phase for each of the following open-loop transfer functions. After completing the hand sketches verify your result using MATLAB. Turn in your hand sketches and the MATLAB results on the same scales.

(a) $L(s) = \dfrac{1}{s^2(s+8)}$