UC Berkeley EE128 Homework #7

Due on 11/20/06 at 11am

(1) Textbook problem 7.1

1. A schematic for the satellite and scientific probe for the Gravity Probe-B (GP-B) experiment that was launched on April 30, 2004 is sketched in Fig. 7.82. Assume that the mass of the spacecraft plus helium tank, m_1, is 2000 kg and the mass of the probe, m_2, is 1000 kg. A rotor will float inside the probe and will be forced to follow the probe with a capacitive forcing mechanism. The spring constant of the coupling, k, is 3.2×10^6. The viscous damping b is 4.6×10^3.

   (a) Write the equations of motion for the system consisting of masses m_1 and m_2 using the inertial position variables, y_1 and y_2.

   (b) The actual disturbance u is a micrometeorite, and the resulting motion is very small Therefore, rewrite your equations with the scaled variables $z_1 = 10^6 y_1$, $z_2 = 10^6 y_2$, and $v = 1000u$.

   (c) Put the equations in state-variable form using the state $\mathbf{x} = [z_1 \quad \dot{z}_1 \quad z_2 \quad \dot{z}_2]^T$, the output $y = z_2$, and the input an impulse, $u = 10^{-3}\delta(t)$ N·sec on mass m_1.

   (d) Using the numerical values, enter the equations of motion into MATLAB in the form

$$\dot{\mathbf{x}} = \mathbf{F}\mathbf{x} + \mathbf{G}v \quad (1)$$

$$y = \mathbf{H}\mathbf{x} + Jv \quad (2)$$

   and define the MATLAB system: sysGPB = ss(F,G,H,J). Plot the response of y caused by the impulse with the MATLAB command impulse(sysGPB). This is the signal the rotor must follow.

   (e) Use the MATLAB commands p = eig(F) to find the poles (or roots) of the system and z = tzero(F,G,H, J) to find the zeros of the system.

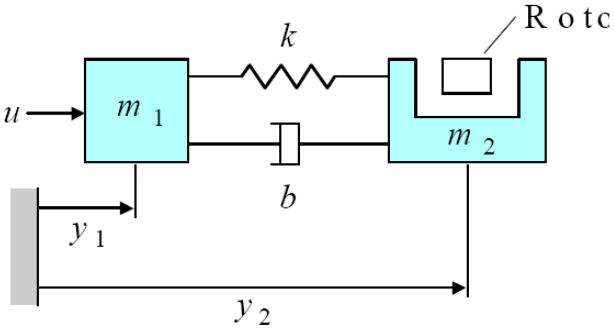

Hints: In section (a), the rotor is not part of the problem and can be ignored in writing the equations of motion. For section (b), see book section 7.3.1

(2) Textbook problem 7.2

Give the state description matrices in control-canonical form for the following transfer functions:

(c) $\dfrac{2s+1}{s^2+3s+2}$

(e) $\dfrac{(s+10)(s^2+s+25)}{s^2(s+3)(s^2+s+36)}$

(3) Textbook problem 7.4

4. Give the state description matrices in normal-mode form for the transfer functions of Problem 7.2. Make sure that all entries in the state matrices are realvalued by keeping any pairs of complex conjugate poles together, and realize them as a separate subblock in control canonical form.

Do only sections (c) and (e).

(4) Textbook problem 7.6

Show that the transfer function is not changed by a linear transformation of state.
Hint: Assume the original system is:

$$\begin{aligned} \dot{\mathbf{x}} &= \mathbf{F}\mathbf{x} + \mathbf{G}u, \\ y &= \mathbf{H}\mathbf{x} + Ju, \\ G(s) &= \mathbf{H}(s\mathbf{I} - \mathbf{F})^{-1}\mathbf{G} + J. \end{aligned}$$