- **Announcements**:
  - As has been announced previously, there will be no lecture next week (this is why we've been having evening lectures)
  - There will still be discussion and labs
  - Mehmet will take Yang's discussion and lab sections, since Yang will also be gone
  - HW#10 is due the week after next
  - Use the smaller HW load to finish your project
- **Today**:
  - Settling Time
  - Power Supply Rejection Ratio (PSRR)

Last Time –

$\boxed{\text{Settling Time}}$

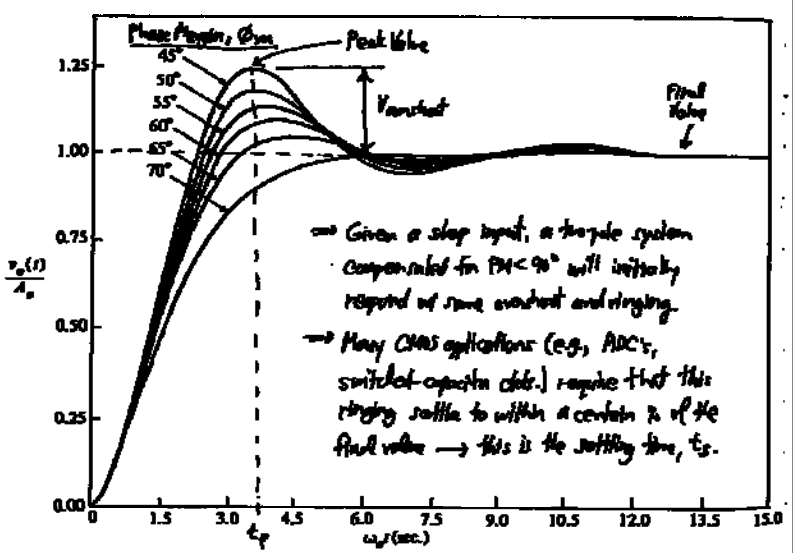

Figure 8.2-3 Response of second-order system with various phase margins.

Obtain Expressions for:

① $V_{overshoot}$
② Settling Time, T_s

} as functions of phase margin, ϕ_m

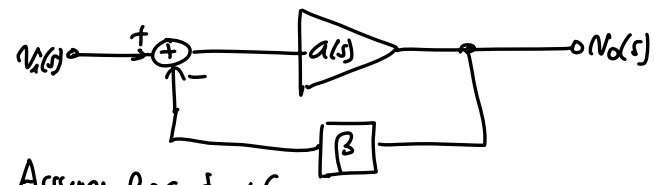

Assume: β = const w/ freq.

$$A(s) = \frac{V_o(s)}{V_i(s)} = \frac{a(s)}{1+a(s)\beta}$$

$$\left[a(s) = \frac{a_0}{\left(1+\frac{s}{\omega_1}\right)\left(1+\frac{s}{\omega_2}\right)} = \frac{a_0\omega_1\omega_2}{(s+\omega_1)(s+\omega_2)}\right]$$

$$A(s) = \frac{a_0\omega_1\omega_2}{s^2+(\omega_1+\omega_2)s+\omega_1\omega_2(1+a_0\beta)}$$

$$= \underbrace{\frac{A_0\omega_n^2}{s^2+2\zeta\omega_n s+\omega_n^2} = \frac{A_0\omega_0^2}{s^2+\left(\frac{\omega_0}{Q}\right)s+\omega_0^2}}_{\text{General Lowpass Biquad Transfer Functions}} \quad [\omega_0 = \omega_n]$$

where by direct comparison:

$$\omega_n = \sqrt{\omega_1\omega_2(1+a_0\beta)}$$

$$2\zeta\omega_n = \omega_1+\omega_2 \rightarrow \zeta = \frac{\omega_1+\omega_2}{2\omega_n} = \frac{1}{2}\frac{\omega_1+\omega_2}{\sqrt{\omega_1\omega_2(1+a_0\beta)}}$$

$$A_0\omega_n^2 = a_0\omega_1\omega_2 \rightarrow A_0 = \frac{a_0}{1+a_0\beta} \checkmark$$

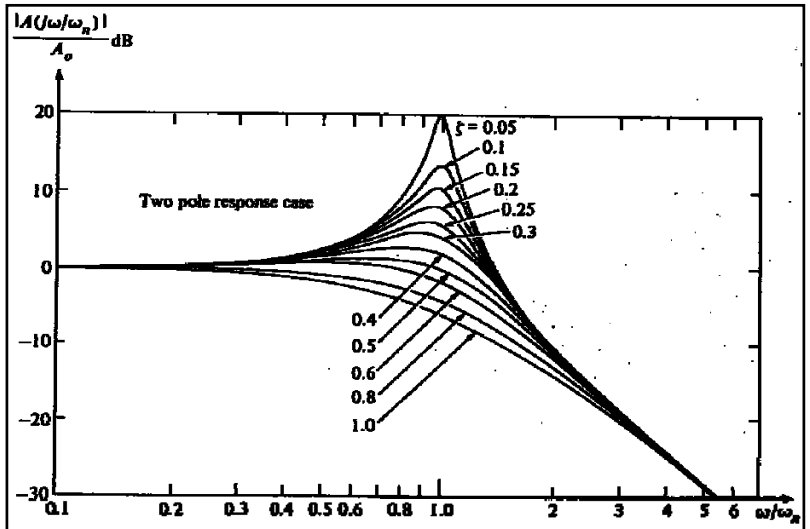

Figure C-2 Gain magnitude response for various values of ζ for a second-order, low-pass system.

Properties of the General Lowpass Biquad Xfer Function

Pole-zero Diagram -

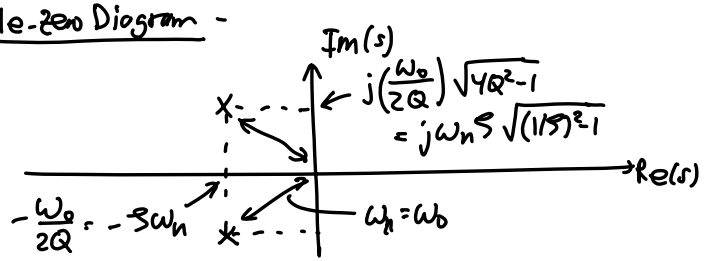

Root Locus: poles move as the loop gain increases

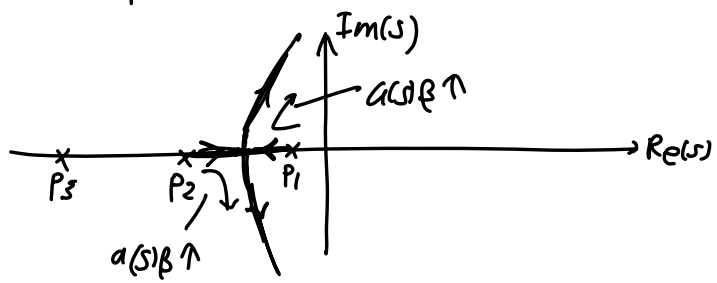

Time Domain Behavior -

$$v_o(t) = A_o V_i\left[1 - \frac{1}{\sqrt{1-\zeta^2}} e^{-\zeta\omega_n t} \sin\left(\sqrt{1-\zeta^2}\,\omega_n t + \phi\right)\right],$$

where $\phi = \tan^{-1}\left[\frac{\sqrt{1-\zeta^2}}{\zeta}\right]$

For $\zeta < 1$:

$$\%\text{Overshoot} = \frac{\text{Peak Value} - \text{Final Value}}{\text{Final Value}} = \exp\left[\frac{-\pi\zeta}{\sqrt{1-\zeta^2}}\right]$$

$$\boxed{V_{overshoot} = V_o \exp\left[\frac{-\pi\zeta}{\sqrt{1-\zeta^2}}\right]}$$

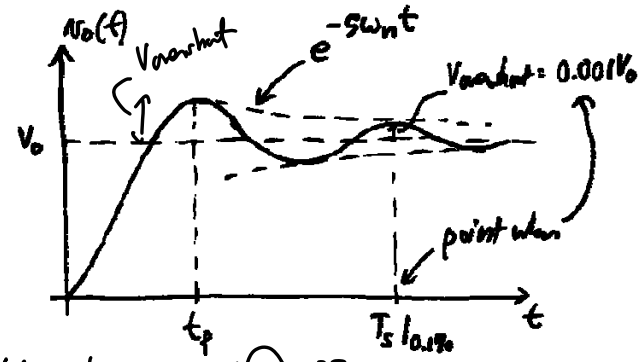

Find t_p: when the $\sin(\ ) = \frac{3\pi}{2}$

$$\sqrt{1+\zeta^2}\,\omega_n t_p + \phi = \frac{3\pi}{2}$$

$$\left[\zeta = \text{small} \rightarrow \phi \approx \frac{\pi}{2}\right] \Rightarrow \boxed{t_p = \frac{\pi}{\omega_n\sqrt{1-\zeta^2}}}$$

Approx. Determination of 0.1% Settling Time -

$$V_{overshoot}\, e^{-\zeta\omega_n(T_s - t_p)} = 0.001 V_o$$

$$\boxed{T_s = t_p - \frac{1}{\zeta\omega_n}\ln\left[\frac{0.001V_o}{V_{overshoot}}\right]}$$

$$\boxed{\zeta = -\frac{1}{\omega_n(T_s - t_p)}\ln\left[\frac{0.001V_o}{V_{overshoot}}\right]}$$

Determine $\phi_m = f(\zeta)$ –

⇒ first, get an expression for loop X'mission:

$$A(s) = \frac{G(s)}{1 + a(s)\beta}$$

rearrange

$$a(s)\beta = \frac{\beta A(s)}{1 - \beta A(s)} = \frac{\beta A_o \omega_n^2}{s^2 + 2\zeta\omega_n s + \omega_n^2 - \beta A_o \omega_n^2}$$

$$\left[\beta \propto \frac{1}{A_o}\right] \Rightarrow \quad = \frac{\omega_n^2}{s^2 + 2\zeta\omega_n s} = \frac{\omega_n^2}{s(s + 2\zeta\omega_n)}$$

pole @ origin

LHP pole

⇒ Get freq. @ which

$|a(s)\beta| = 1 \longrightarrow \omega_{ulg}$

$$|a(j\omega)\beta| = \frac{\omega_n^2}{\sqrt{\omega^4 + \omega^2 4\zeta^2\omega_n^2}} \Rightarrow = 1$$

Solve quadratic

$$\boxed{\omega_{ulg} = \omega_n\left[\sqrt{4\zeta^2 - 1} - 2\zeta^2\right]^{1/2}}$$

Freq. for phase margin determination.

Find expression for phase:

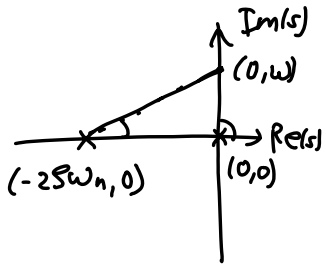

$$\phi = -\tan^{-1}\left(\frac{\omega}{0}\right) - \tan^{-1}\left(\frac{\omega}{2\zeta\omega_n}\right)$$

$$= -90^\circ - \tan^{-1}\left(\frac{\omega}{2\zeta\omega_n}\right)$$

Phase Margin:

$$\phi_m = 180^\circ + \phi\big|_{\omega = \omega_{ulg}}$$

$$= 90^\circ - \tan^{-1}\left(\frac{\omega_{ulg}}{2\zeta\omega_n}\right)$$

$$\boxed{\phi_m = \tan^{-1}\left(\frac{2\zeta\omega_n}{\omega_{ulg}}\right)}$$

$$\zeta = \frac{1}{2}\frac{\omega_{ulg}}{\omega_n}\tan\phi_m$$

$$\boxed{T_s = t_p - \frac{2}{\omega_{ulg}\tan\phi_m}\ln\left[\frac{0.001V_o}{V_{overshoot}}\right]}$$

⇒ But there's more to it than this. See the following papers:

① B.Y. Kamath, R.G. Meyer, and P.R. Gray, "Relationship between frequency response and settling time of operational amplifiers," IEEE J. of Solid-State Ckts., vol. SC-9, no. 6, pp. 377-382, Dec. 1974.

② R.J. Apfel and P.R. Gray, "A fast-settling monolithic operational amplifier using doublet compression techniques," IEEE J. of Solid-State Ckts, vol. SC-9, no. 6, pp. 332-340, Dec. 1974.

Power Supply Rejection (PSRR)

In today's mixed-signal ckts:

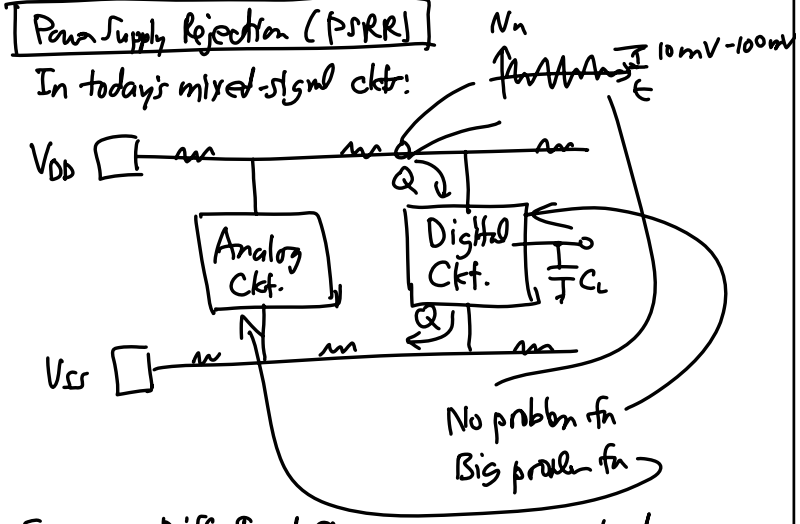

Ex. CMOS Diff. Input Stage w/ Current Mirror Load

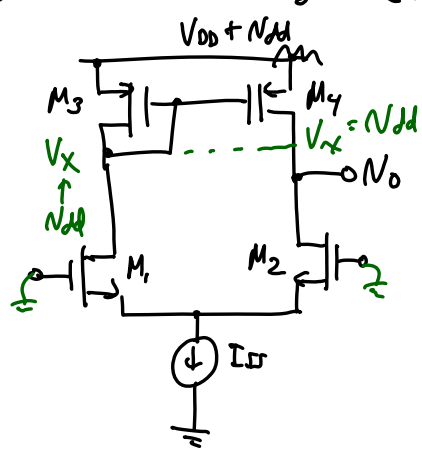

Thus:

$\frac{v_o}{v_{dd}} \approx 1 \Rightarrow$ supply noise directly seen @ output!

Definition. Power Supply Rejection Ratio (PSRR)

$$PSRR \triangleq \frac{\text{Gain From Input to Output}}{\text{Gain From Supply to Output}} = \frac{A_v|_{v_{dd}=0}}{A_{dd}|_{v_i=0}}$$

Thus, for the above example: $PSRR \cong \frac{g_{m2}(r_{o2}\|r_{o4})}{1}$

$\Longrightarrow$ $PSRR \cong g_{m2}(r_{o2}\|r_{o4})$

For more complicated circuits, much more work is involved.

↳ to make it easier, use a unity gain configuration

↳ can also get $PSRR = f(\omega)$

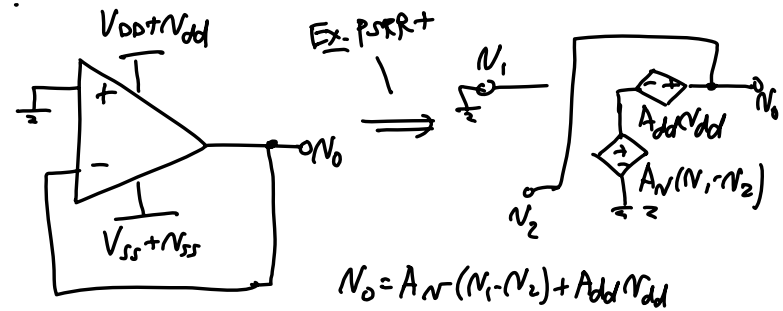

$$v_o = A_v\underbrace{(v_1-v_2)}_{=-v_o} + A_{dd}v_{dd}$$

$$v_o(1+A_v) = A_{dd}v_{dd}$$

$A_0 = 1$

$$\frac{v_o}{v_{dd}} = \frac{A_{dd}}{1+A_v} = \frac{1}{\cancel{\frac{1}{A_{dd}}}+\frac{A_v}{A_{dd}}} \approx \boxed{\frac{1}{PSRR^+} = \frac{v_o}{v_{dd}}}$$

$$\boxed{PSRR^+ = \frac{v_{dd}}{v_o}}$$

Thus, just find this Xfer Function to get $PSRR^+$ when the op amp is hooked into unity gain FB!

Two-Stage OpAmp PSRR+

Want $PSRR^+ = f(\omega)$ ← freq.

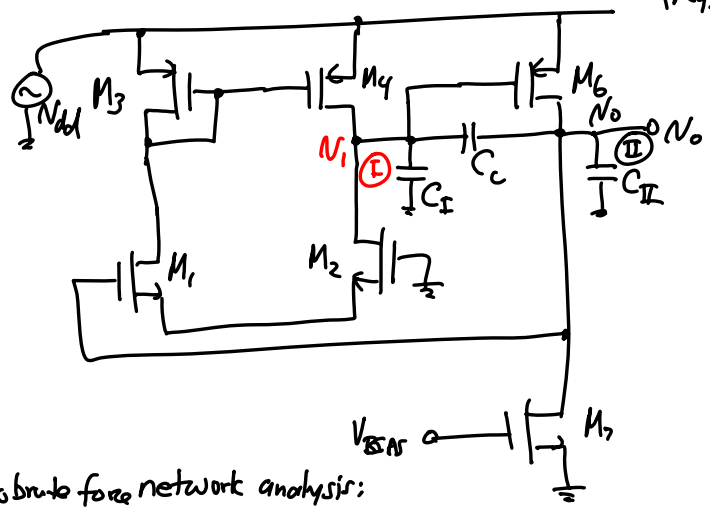

Do brute force network analysis:

KCL(I): $G_I v_{dd} = (G_I + sC_c + sC_I)v_1 - (g_{mI} + sC_c)v_o$

KCL(II): $(g_{mII} + g_{ds6})v_{dd} = (g_{mII} - sC_c)v_1 + (G_{II} + sC_c + sC_{II})v_o$

$G_I = g_{ds1} + g_{ds4} = g_{ds2} + g_{ds4}$

$G_{II} = g_{ds6} + g_{ds7}$

$g_{mI} = g_{m1} = g_{m2}$

$g_{mII} = g_{m6}$

$\left[g_{ds} = \frac{1}{r_o}\right]$ ← For saturated device.

Get:

$$\left(\frac{v_{dd}}{v_o}\right)\Big|_{closed\text{-}loop} = \frac{N(s)}{D(s)} = \frac{(\quad)}{(\quad)}$$

math & rearranging

polynomials

then use: $N(s) = 1 + \left(\frac{s}{z_1} + \frac{s}{z_2}\right) + \frac{s^2}{z_1 z_2} \approx 1 + \frac{s}{z_1} + \frac{s^2}{z_1 z_2}$

$$PSRR^+ = A_{vo}^+ \left[\frac{\left(1+\frac{s}{GB}\right)\left(1+\frac{s}{|p_2|}\right)}{\left(1+\frac{s}{GB/A_{vo}^+}\right)}\right]$$

where GB = Gain BW Product $= \frac{g_{mI}}{C_c}$

A_{vo}^+ = DC $PSRR^+ = \frac{g_{mI} g_{mII}}{G_I g_{ds6}}$

$|p_2| = \frac{g_{mII}}{C_{II}}$ $\quad \omega_p^+ = \frac{GB}{A_{vo}^+}$

To maximize $PSRR^+$: (@dc) decrease g_{ds6}, raise g_{mII}

$$PSRR^- = A_{vo}^- \left[\frac{\left(1+\frac{s}{GB}\right)\left(1+\frac{s}{|p_2|}\right)}{\left(1+\frac{s}{\omega_p^-}\right)}\right]$$

where $A_{vo}^- = \frac{g_{mI} g_{mII}}{G_I g_{ds7}}$

$GB = \frac{g_{mI}}{C_c}$ $\quad \omega_p^- = \frac{G_I}{C_c + C_I} \approx \frac{G_I}{C_c}$

$|p_2| = \frac{g_{mII}}{C_{II}}$

To maximize $PSRR^-$: ① decrease g_{ds7}

② increase $g_{mII} = g_{m6}$

Remarks.

① Since often $g_{ds7} < g_{ds6} \rightarrow$ often $PSRR^- > PSRR^+$ (@dc)

② $$\frac{\omega_p^-}{\omega_p^+} = \frac{\cancel{C_s}/\cancel{C_c}}{\dfrac{\cancel{C_1}\, g_{ds6}}{g_{mII}\cancel{C_c}}} = \frac{g_{mII}}{g_{ds6}}$$ $\rightarrow$ that's quite large

$\therefore \omega_p^- \gg \omega_p^+$

Thus, for an NMOS input op amp, $PSRR^-$ is often better than $PSRR^+$. $\rightarrow$ in design, need to worry more about $PSRR^+$!

③ Some methods for reducing PSRR:

(i) Use buffer-based zero-cancellation in the compensation loop.

(ii) Use cascode circuitry, or balanced circuit topologies.

(iii) Supply-independent biasing.

(iv) Design strategies to minimize parasitic capacitive feedthrough.