Lecture 16: High Gain Op Amps

- Announcements:
  - This is our make-up lecture (Friday, 3 p.m., in 521 Cory, the Hogan Room)
  - I am recording this using software local to my computer and a microphone
  - Lab#2 will be due the week AFTER Spring Break; this should give ample time to write up a good lab report
  - Midterm Exam next week, Thursday, March 17, in 213 Wheeler (our regular room), during the regular class period
  - Review Session for the midterm: Monday, 3/14, 7-9 p.m., in 521 Cory (Hogan Room)
- ---
- Lecture Topics:
  - Finite Gain-BW Product (cont.)
  - High Gain Op Amps
    - Cascode
    - Cascaded
- ---
- Last Time:
- Looking at non-ideal op amps, with a focus on finite gain and bandwidth

over

Finite Op Amp Gain & Bandwidth

For an ideal op amp, $A = \infty$.

In reality, the gain is given by: $A(s) = \dfrac{A_0}{1 + s/\omega_b}$

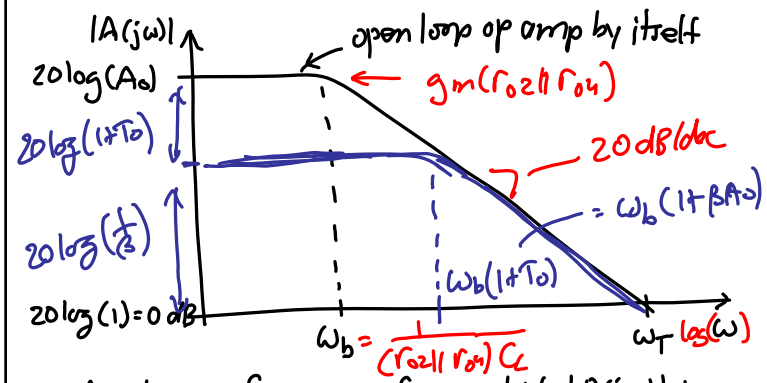

$\omega_T \triangleq$ unity gain frequency = freq. @ which $|A(j\omega)| = 1$ (= 0dB)

At ω_T:

$$|A(j\omega_T)| = 1 = \frac{A_0}{\sqrt{1 + \left(\frac{\omega_T}{\omega_b}\right)^2}}$$

$$[\omega_T \gg \omega_b] \Rightarrow \frac{A_0}{\frac{\omega_T}{\omega_b}} = 1 \rightarrow \boxed{\omega_T = A_0 \omega_b}$$

Gain-Bandwidth Product

For $\omega \gg \omega_b$:

$$A(s) \approx \frac{A_0}{\frac{s}{\omega_b}} = \frac{A_0 \omega_b}{s} = \frac{\omega_T}{s} = \frac{f_T}{f}$$

[Integrator w/ time constant $\tau = \frac{1}{\omega_T}$]

The unity gain bandwidth f_T is usually specified on op amp data sheets. Knowing f_T, one can easily determine the op amp gain at a given frequency f.

Copyright © 2011 Regents of the University of California

Frequency Response of Closed loop Amplifiers

Example. Non-Inverting Amplifier

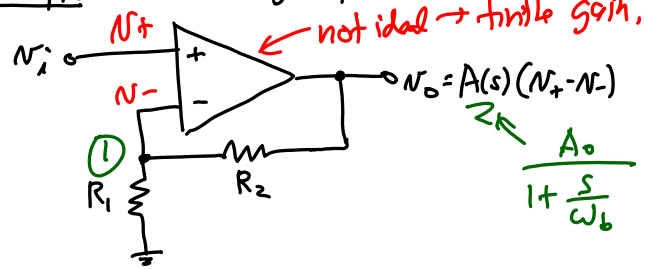

not ideal → finite gain, finite BW

Find an expression for the gain as a function of frequency.

① Brute force derivation:

KCL @ ①: $\frac{v_o - v_-}{R_2} = \frac{v_-}{R_1} \rightarrow \frac{v_o}{R_2} = v_-\left(\frac{1}{R_1}+\frac{1}{R_2}\right)$

$\frac{v_o}{R_2} = \left(v_i - \frac{v_o}{A(s)}\right)\left(\frac{1}{R_1}+\frac{1}{R_2}\right) \longrightarrow \frac{v_o}{v_i}(s) = \frac{1+\frac{R_2}{R_1}}{1+\frac{1}{A(s)}\left(1+\frac{R_2}{R_1}\right)}$

Assuming A_o = finite, but large

$\left[A(s) = \frac{A_o}{1+\frac{s}{\omega_b}}\right] \Rightarrow \boxed{\frac{v_o}{v_i}(s) = \left(1+\frac{R_2}{R_1}\right)\frac{1}{1+\frac{s}{A_o\omega_b\left(\frac{R_1}{R_1+R_2}\right)}}}$

(after algebra)

② More insightful way to do this:

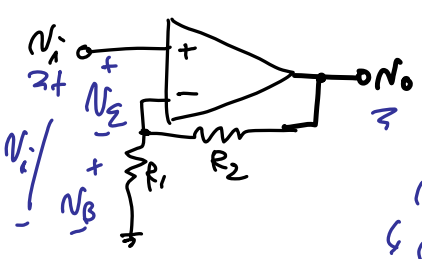

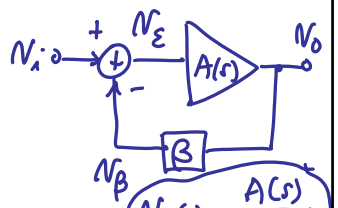

Neg. FB Block Diagram

$v_\varepsilon = v_i - v_\beta$

$v_i = v_\varepsilon + v_\beta$

$\frac{v_o}{v_i}(s) = \frac{A(s)}{1+\beta A(s)}$

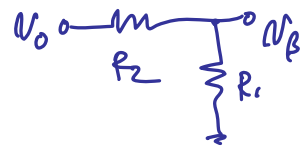

$v_\beta = \frac{R_1}{R_1+R_2} v_o$

$$\boxed{\beta = \frac{v_\beta}{v_o} = \frac{R_1}{R_1+R_2}}$$

Recall from our previous FB analysis:

$\frac{v_o}{v_i}(s) = \frac{A(s)}{1+\beta A(s)}$

$\left[A(s) = \frac{A_o}{1+\frac{s}{\omega_b}}\right] \rightarrow \frac{v_o}{v_i}(s) = \frac{\frac{A_o}{1+s/\omega_b}}{1+\beta\left(\frac{A_o}{1+s/\omega_b}\right)}$

$$\boxed{\frac{v_o}{v_i}(s) = \underbrace{\frac{A_o}{1+\beta A_o}}_{\text{closed loop dc gain factor}} \underbrace{\frac{1}{1+\frac{s}{\omega_b(1+\beta A_o)}}}_{\text{frequency shaping term}}}$$

$s = j\omega$

$T_o = \beta A_o \triangleq$ "loop gain" at $\omega = 0$ (i.e., at dc)

Plug in β: A_o = large

$\frac{v_o}{v_i}(s) \cong \frac{1}{\beta}\frac{1}{1+\frac{s}{\omega_b(1+\beta A_o)}} = \boxed{\left(1+\frac{R_2}{R_1}\right)\frac{1}{1+\frac{s}{\omega_b A_o\left(\frac{R_1}{R_1+R_2}\right)}}}$

$[\beta A_o \gg 1] \rightarrow \omega_b \beta A_o$

Copyright © 2011 Regents of the University of California

What if $A_o \neq$ large?

↳ can't say $\frac{A_o}{1+\beta A_o} = \frac{1}{\beta}$

need to include A_o in the dc gain term of the previous analysis

Observations:

① Closed loop DC gain $= \frac{A_o}{1+\beta A_o} = \frac{A_o}{1+T_o} \approx \frac{A_o}{T_o}$ $[T_o \gg 1]$

i.e., the closed loop gain is reduced from the open loop gain by $1+T_o$ → show this on graph

② Alternatively, closed loop DC gain $\approx \frac{A_o}{\beta A_o} = \frac{1}{\beta}$ $[T_o \gg 1]$

③ ω_{-3dB} has increased from $\omega_b \rightarrow \omega_b(1+A_o\beta) = \omega_b(1+T_o)$

↳ To draw the Bode plot, just find the dc gain, draw a horizontal line across, then follow the open loop response after running into it!

④ Gain-BW Product $= \frac{A_o}{1+\beta A_o}\omega_b(1+\beta A_o) = A_o\omega_b = \omega_T$

∴ the Gain-BW product remains the same for the open & closed loop FB cases!

Higher Gain Op Amps

How can we increase gain?

① Cascode

② Cascade of Amplifiers

Telescopic Op Amp w/ Single-Ended Output

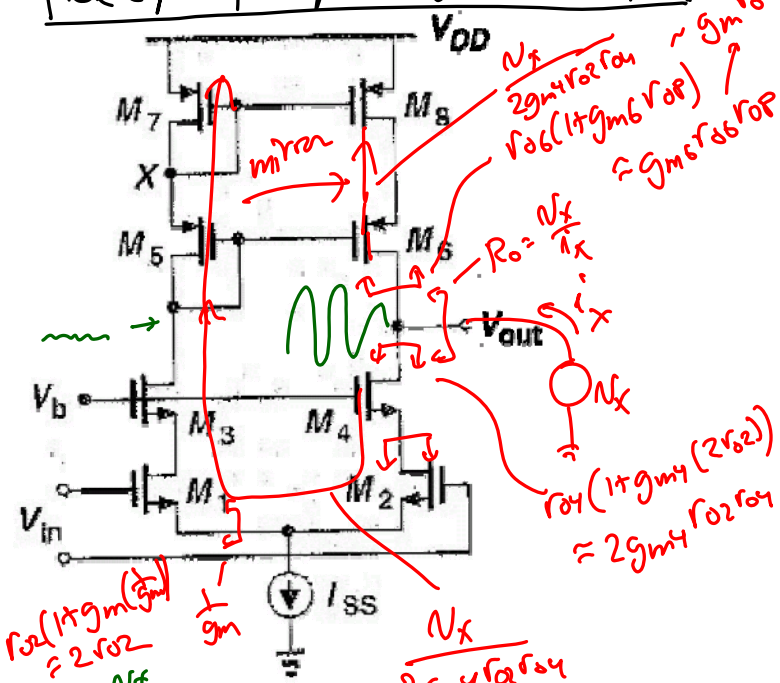

$R_o = (g_{m6}r_{o6}r_{o8})\|(g_{m4}r_{o2}r_{o4}) = (g_{mN}r_{oN}^2)\|(g_{mp}r_{op}^2)$

$i_x = \frac{v_x}{g_{m6}r_{o6}r_{o8}} + \frac{v_x}{2g_{m4}r_{o2}r_{o4}} + \frac{v_x}{2g_{m4}r_{o2}r_{o4}}$

Copyright © 2011 Regents of the University of California

$$i_x = \frac{v_x}{g_{m6} r_{o6} r_{o8}} + \frac{2 v_x}{2 g_{m4} r_{o2} r_{o4}}$$

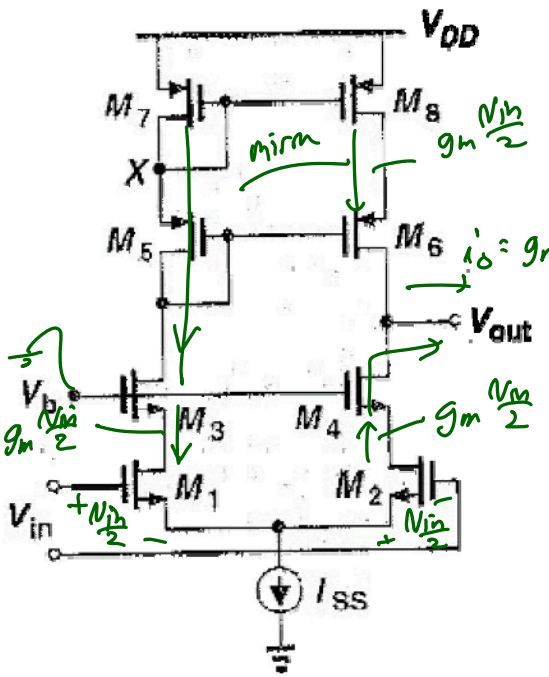

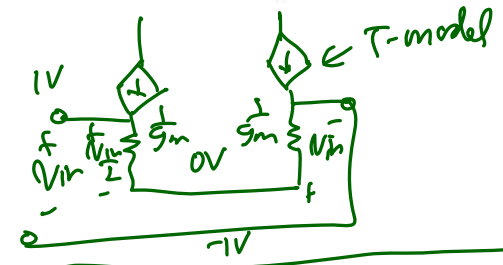

gain will be BIG!

$$\therefore \text{Gain} = A_v = g_m r \left[(g_{mN} r_{oN}^2) \| (g_{mP} r_{oP}^2) \right]$$

huge R! huge R!

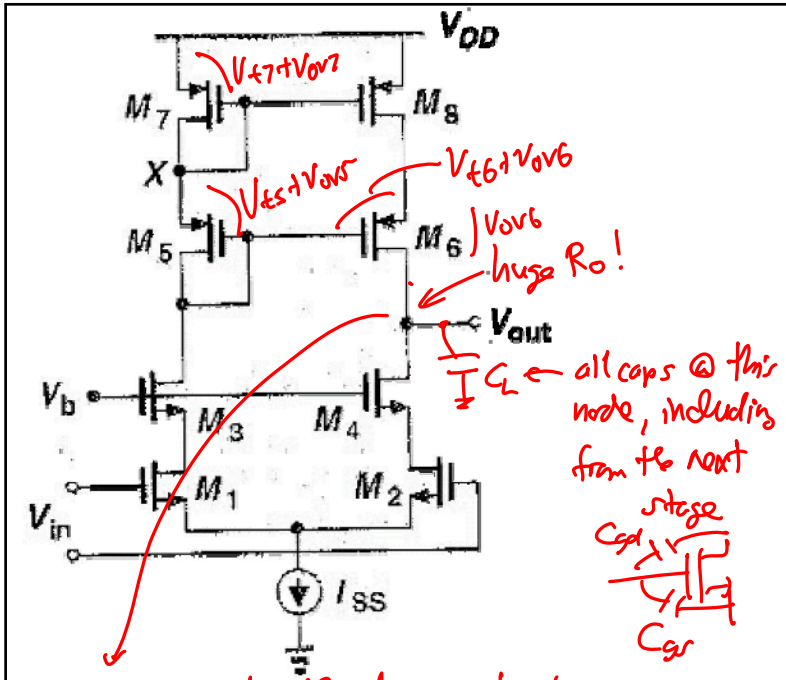

This contributes the dominant pole

$$\omega_H = \frac{1}{R_o C_L}$$

Problems / Issues:

① Limited output swing:

$$V_{omax} = V_{DD} - |V_{t7}| - |V_{ov7}| - |V_{t5}| - |V_{ov5}| + |V_{t6}| + \cancel{|V_{ov6}|} - \cancel{|V_{ov6}|}$$

$$V_{omin} = V_{ovss} + V_{ov2} + V_{ov1}$$

from tail current source

$$V_{swing} = V_{omax} - V_{omin}$$

Swing not enough! → problem!

Copyright © 2011 Regents of the University of California

Problem ②: Difficult to tie the input to the output!

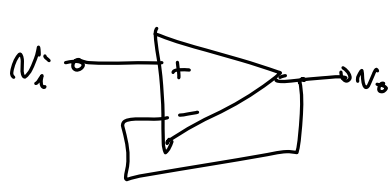

unity gain buffer
extremely useful!

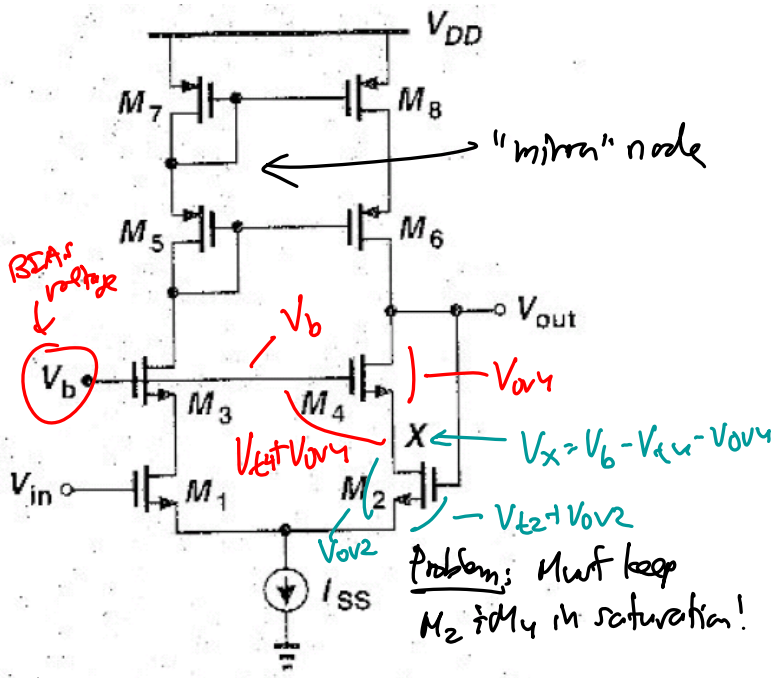

Problem: Must keep M_2 & M_4 in saturation!

M_4: Need $V_{out} \geq V_b - V_{t4} - \cancel{V_{ov4}} + \cancel{V_{ov4}}$

$\therefore V_{out} \geq V_b - V_{t4}$

M_2: Need $V_{out} \leq V_x - \cancel{V_{ov2}} + V_{t2} + \cancel{V_{ov2}}$

$V_{out} \leq V_b - V_{t4} - V_{ov4} + V_{t2} \approx V_b - V_{ov4}$

$V_{t2} \approx V_{t4}$

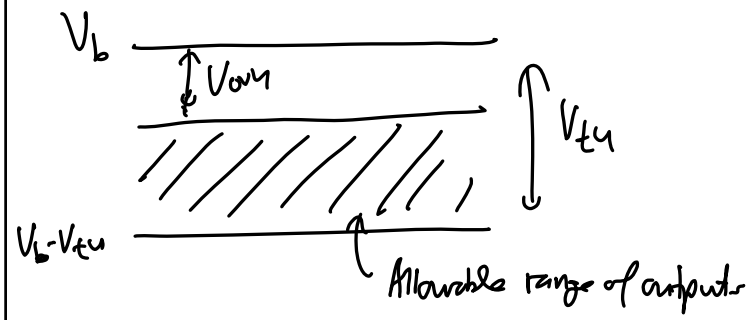

Problem ③:

Low freq. non-dominant pole associated w/ the "mirror" node → will hurt stability in feedback ckts!

Soln: use a fully differential, fully-balanced op amp

Copyright © 2011 Regents of the University of California