EE 140 | Inspection Analysis | CTN | 1

EE 140 ANALOG INTEGRATED CIRCUITS SPRING 2011
C. Nguyen

Useful Inspection Formulas

The General Case (Midband)

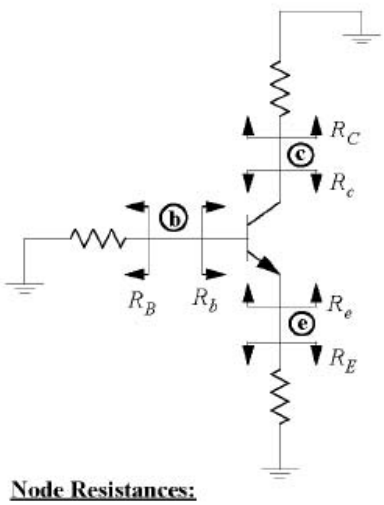

$$R_b = (r_e + R_E)(\beta + 1) = r_\pi + (\beta + 1)R_E$$

$\frac{\alpha}{g_m} \approx \frac{1}{g_m}$

$$R_e = \frac{r_\pi + R_B}{\beta + 1} \cong \frac{1}{g_m} + \frac{R_B}{\beta + 1}$$

Hybrid-π:

$$R_c = r_o\left[1 + \frac{g_m R_E}{1 + (R_B / r_\pi)}\right]$$

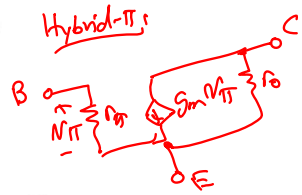

Base-to-Collector Gain:

$$\frac{v_c}{v_b} = -G_m R_c \qquad G_m = \frac{g_m}{1 + g_m R_E}$$

Emitter-to-Collector Gain:

$$\frac{v_c}{v_e} = -G_m R_c \qquad G_m = -\left(\frac{r_\pi}{r_\pi + R_B}\right) g_m$$

Base-to-Emitter Gain:

$$\frac{v_e}{v_b} = \frac{R_E \| r_o}{R_E \| r_o + r_e}$$

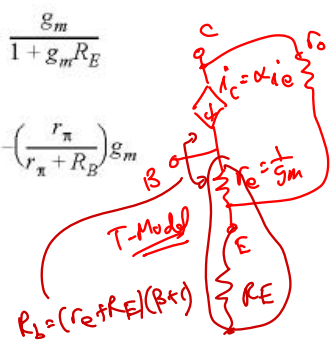

Node Resistances:

$$R_c = R_C \| R_c$$
$$R_e = R_E \| R_e$$
$$R_b = R_B \| R_b$$

High Frequency Analysis

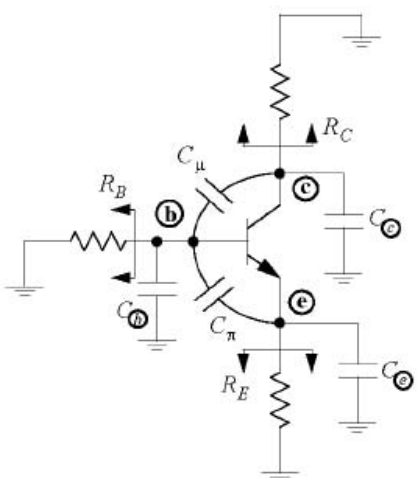

$$\omega_H = \frac{1}{\tau_b + \tau_c + \tau_e + \tau_{\mu o} + \tau_{\pi o}}$$

$$\tau_b = C_b R_b \qquad \tau_{\pi o} = C_\pi R_{\pi o}$$
$$\tau_c = C_c R_c \qquad \tau_{\mu o} = C_\mu R_{\mu o}$$
$$\tau_e = C_e R_e$$

$$R_{\pi o} = r_\pi \| \frac{R_B + R_E}{1 + g_m R_E}$$

$$R_{\mu o} = R_b + R_c + G_m R_c R_b$$