Lecture 23: RHP Zero, Slew Rate, Settling Time

- Announcements:
- This lecture will be 2 hours (1st lecture to make up for missing Thursday)
- So next two lectures will also be 2 hours, with video of at least the last half hour posted online
- HW#11 has been online
- Lecture Topics:
  - Nulling the RHP Zero (finish compensation)
  - Slew Rate (revisited)
  - Settling Time
- ---
- Last Time:

Solution: $\boxed{\text{Nulling Resistor in Series w/ } C_c}$

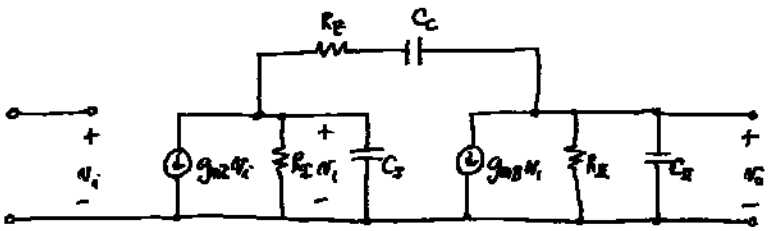

Doing KCL:

$$p_1 \cong -\frac{1}{g_{mII} R_I R_{II} C_c}$$

$$p_2 \cong -\frac{g_{mII} C_c}{C_I C_{II} + C_c(C_I + C_{II})} \approx -\frac{g_{mII}}{C_{II}}$$

Same as before

$$p_3 = -\frac{1}{R_Z C_I}$$ ← pole due to R_Z

$$z_1 = \frac{1}{C_c\left(\frac{1}{g_{mII}} - R_Z\right)}$$ ← relocated zero (function of R_Z)

Note: The position of the zero depends upon the value of the "nulling resistor" R_Z

If $R_Z < \frac{1}{g_{mII}}$, then z_1 is in the RHP ✗

If $R_Z > \frac{1}{g_{mII}}$, then z_1 " " " LHP ✓

↳ This is great! → Can convert the zero to a LHP zero!

Can even stick the zero on top of a pole!

↳ much better PM...

$$H(s) = \cdots \frac{(s - z_1)}{(s - p_1)}$$

If $z_1 = p_1$

The Root Locus:

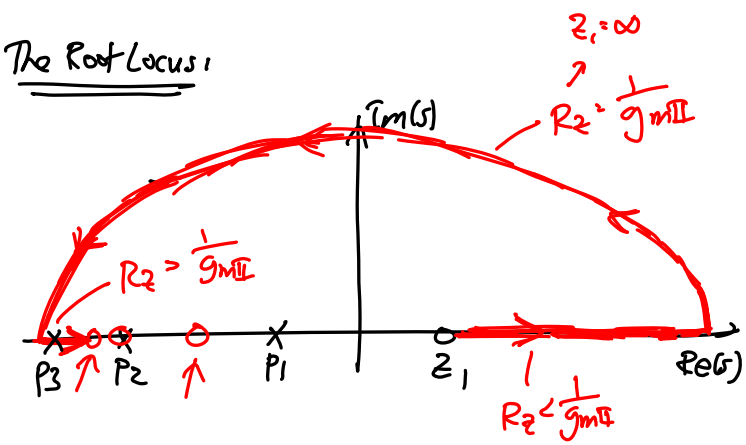

Project Design → Lab #3

Ad Hoc Procedure:

① Write down all eqns. for all needed specs.
↳ then study dependencies, e.g.

$$a_0 = \text{gain} = f(I_d, \lambda, \ldots) \sim \frac{1}{\sqrt{I_d}}$$

② Choose C_c

$$\omega_u = \text{unity gain freq.} = \frac{g_{mI}}{C_c}$$

$$|p_2| = -\frac{g_{mII}}{C_L}$$

③ Choose I_d's → SR → choose to be

④ Define W/L's (governed by swing & input range)

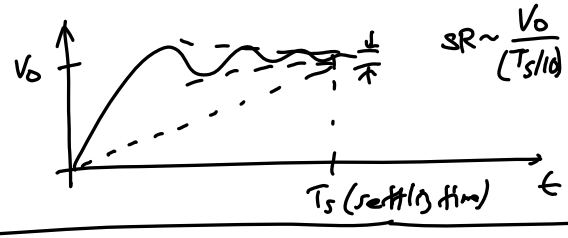

$$SR \sim \frac{V_o}{(T_s/10)} = \frac{10V_o}{T_s}$$

240A Folks:

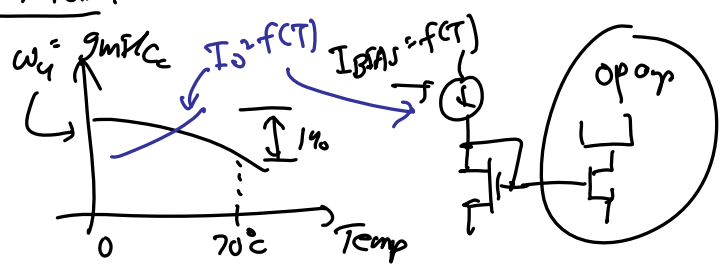

Zero Placement Strategies

① Eliminate z_1 → move it to ∞:

$$z_1 = \frac{1}{C_c\left(\frac{1}{g_{mII}} - R_z\right)} \to \infty \text{ when } \boxed{R_z = \frac{1}{g_{mII}}}$$

load cap.

After doing this:

$$p_3 \cong -\frac{g_{mII}}{C_I}$$

$$p_2 \cong -\frac{g_{mII}}{C_{II}}$$

usually, $C_{II} \gg C_I$, so these poles are far apart... ...but be careful...

This is good, but we can do better!

② Eliminate p_3 by placing z_1 on top of it:

$$z_1 = p_3 \supset \frac{1}{C_c\left(\frac{1}{g_{mII}} - R_z\right)} = -\frac{1}{R_z C_I}$$

$$\boxed{R_z = \frac{1}{g_{mII}\left(1 - \frac{C_I}{C_c}\right)}}$$

After this:

① p_3 gone, p_1 & p_2 left over
↳ no excess phase shift f/ z_1 or p_3

② Now, can place ω_{ult} @ p_2 & expect PM = 45°

...but, we can still do better...

③ Eliminate p_2 by placing z_1 on top of it:

$$z_1 = p_2 \Rightarrow \frac{1}{C_c\left(\frac{1}{g_{mII}} - R_z\right)} = -\frac{g_{mII}}{C_{II}}$$

$$\boxed{R_z = \left(\frac{C_c + C_{II}}{C_c}\right)\left(\frac{1}{g_{mII}}\right) = \frac{1}{g_{mII}}\left(1 + \frac{C_{II}}{C_c}\right)}$$

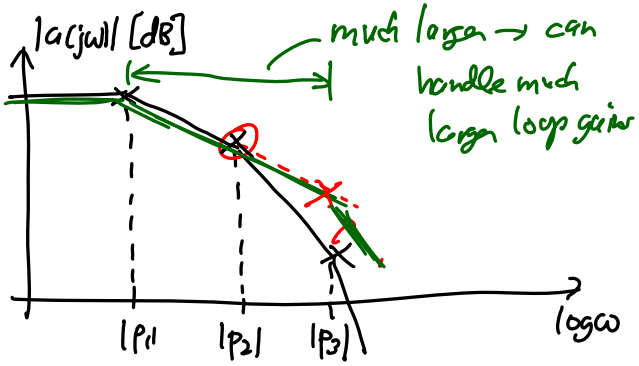

⇒ w/ this choice of R_z:

$$p_3 = -\frac{1}{R_z C_I} = -\frac{1}{\left(\frac{C_c + C_{II}}{C_c}\right)\left(\frac{1}{g_{mII}}\right) C_I}$$

$$p_3 = -\frac{g_{mII} C_c}{C_I (C_c + C_{II})}$$

This becomes the new p_2!

For PM = 45°:

$$C_c = \frac{g_{mI}}{|p_3| A_o} = \frac{g_{mI}}{g_{mII}} \frac{C_I (C_c + C_{II})}{C_c A_o}$$

the "new" $|p_2|$

For PM = 45°

$$C_c \cong \sqrt{\frac{g_{mI}}{g_{mII}} \frac{C_I C_{II}}{A_o}}$$

For PM = 60°:

$$C_c = \frac{1.73\, g_{mI}}{|p_3| A_o}$$

$[C_I \ll C_{II}]$

$$C_c = \sqrt{\frac{1.73\, g_{mI}}{g_{mII}} \frac{C_I C_{II}}{A_o}}$$

For PM = 60°.

Remark. If settling time is important, then approach ③ may not be the best approach. The reason is that if the zero is not exactly equal to the pole, the a "doublet" ensues, which actually can hurt the settling time.

Discussed in a handout to be posted on the course website. → also, discussed in Razavi, problem 10.19.

Actual Implementation

⇒ resistors are too big! → ∴ implement the R_z using a much smaller triode (or linear) region MOS transistor

MOS Resistor: just an MOS transistor operated in the triode region

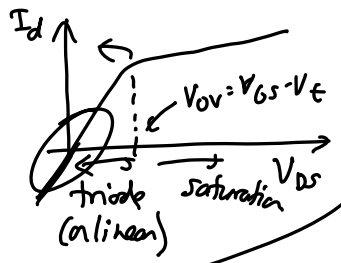

$$I_d = \mu_n C_{ox} \frac{W}{L}\left[(V_{GS}-V_t)V_{DS} - \frac{1}{2}V_{DS}^2\right]$$

$$\frac{\partial I_d}{\partial V_{DS}} = \mu_n C_{ox}\frac{W}{L}\left[V_{GS}-V_t-V_{DS}\right]$$

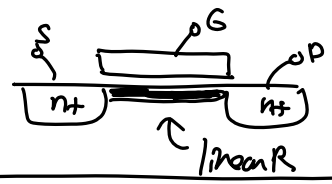

$$\boxed{R_{s.s.} = \left[\frac{dI_d}{dV_{DS}}\right]^{-1}_{V_{GS}=V_{GS},\,V_d=V_{DS}} = \frac{1}{\mu_n C_{ox}\frac{W}{L}(V_{GS}-V_t-V_{DS})} = \frac{1}{g_{ds}}}$$

a variable resistor controllable by V_{GS}

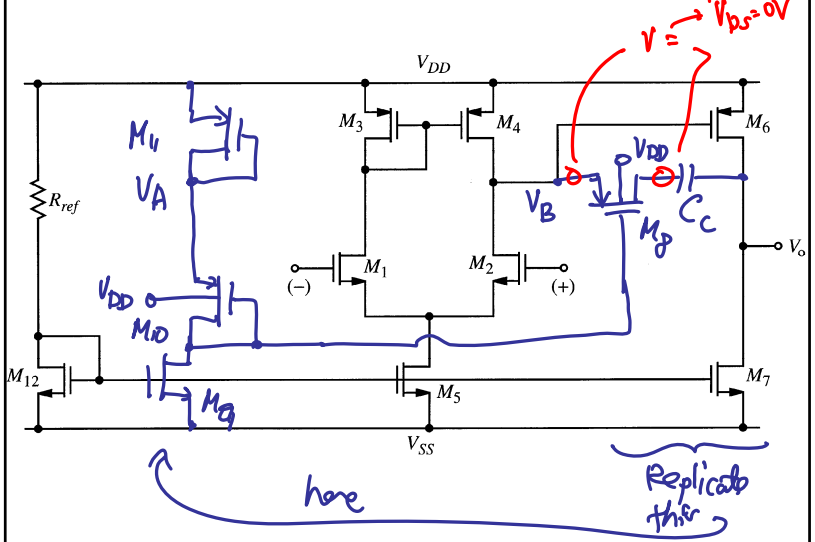

$$V_{DS8} = 0V \Rightarrow R_8 = \frac{1}{\mu_p C_{ox}(W/L)_8\underbrace{(|V_{GS8}| - |V_{t8}|)}_{|V_{ov8}|}}$$

Design.

Need $V_A = V_B \rightarrow |V_{GS11}| = |V_{GS6}|$, know that $|V_{t11}| = |V_{t6}|$

$$[V_{ov11} = V_{ov6}] \Rightarrow \sqrt{\frac{2I_{D11}}{\mu_p C_{ox}(\frac{W}{L})_{11}}} = \sqrt{\frac{2I_{D6}}{\mu_p C_{ox}(\frac{W}{L})_6}}$$

$$\boxed{\left(\frac{W}{L}\right)_{11} = \left(\frac{W}{L}\right)_6 \frac{I_{D11}}{I_{D6}} = \left(\frac{W}{L}\right)_6 \frac{I_{D10}}{I_{D6}}} \rightarrow V_A = V_B$$

Also need $|V_{GS10}| = |V_{GS8}|$

because $V_A = V_B \rightarrow V_{S10} = V_{S8}$, also know $|V_{t10}| = |V_{t8}|$

$$\therefore |V_{ov10}| = |V_{ov8}| = \sqrt{\frac{2I_{D10}}{\mu_p C_{ox}(W/L)_{10}}}$$

Thus:

$$R_8 = \frac{1}{\mu_p C_{ox}(\frac{W}{L})_8\sqrt{\frac{2I_{D10}}{\mu_p C_{ox}(\frac{W}{L})_{10}}}} = \frac{\sqrt{\mu_p C_{ox}(W/L)_{10}}}{\mu_p C_{ox}(\frac{W}{L})_8\sqrt{2I_{D10}}}$$

equate this to the needed R_z

Case: Eliminate p_2 by placing z_1 on top it

$$R_z = \frac{C_c + C_L}{g_{m6} C_c} = \frac{\sqrt{\mu_p C_{ox} (W/L)_{10}}}{\mu_p C_{ox} \left(\frac{W}{L}\right)_8 \sqrt{2 I_{D10}}}$$

$$\sqrt{2 \mu_p C_{ox} (W/L)_6 I_{D6}}$$

$$\left(\frac{W}{L}\right)_8 = \sqrt{\left(\frac{W}{L}\right)_6 \left(\frac{W}{L}\right)_{10} \frac{I_{D6}}{I_{D10}}} \cdot \left(\frac{C_c}{C_c + C_L}\right)$$

Case: move $z_1 \to \infty$

$$R_z = \frac{1}{g_{m6}} \Rightarrow \left(\frac{W}{L}\right)_8 = \sqrt{\left(\frac{W}{L}\right)_6 \left(\frac{W}{L}\right)_{10} \frac{I_{D6}}{I_{D10}}}$$

over

Slew Rate (f/ before)

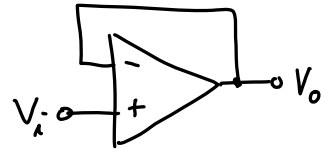

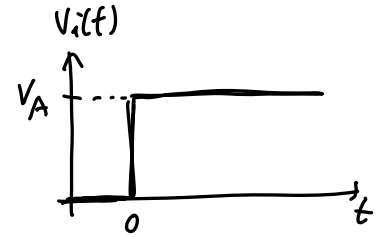

Using Laplace Xform Theory:

$$\frac{V_o}{V_i}(s) = \frac{1}{1 + \frac{s}{\omega_1}} = \frac{1}{1 + s\tau_1}$$

← single (dominant) pole

$$V_i(s) = \frac{V_A}{s}$$

$$V_o(s) = \frac{V_A}{s(1 + s\tau_1)} = \frac{V_A}{s} - \frac{V_A}{s + \frac{1}{\tau_1}}$$

⇕ Inverse Laplace Xform

$$V_o(t) = V_A(1 - e^{-t/\tau_1})$$ ← expected response

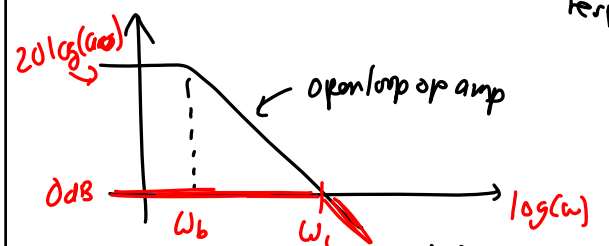

Expectation

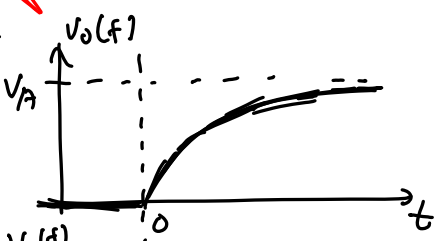

What we really see from a real op amp

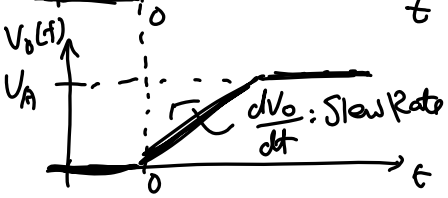

Reason: 1st or 2nd stage of op amp cannot source enough current to mimic the slope (or speed) of a fast rising input signal

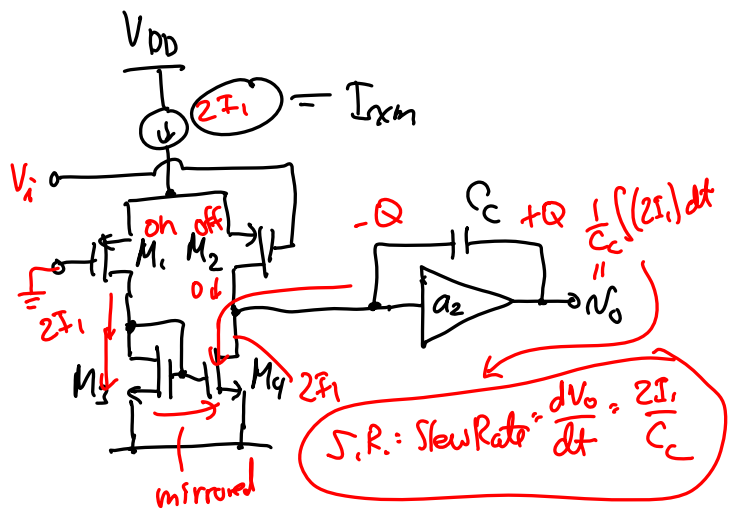

If apply a very fast (i.e., high frequency), large amplitude sinusoid:

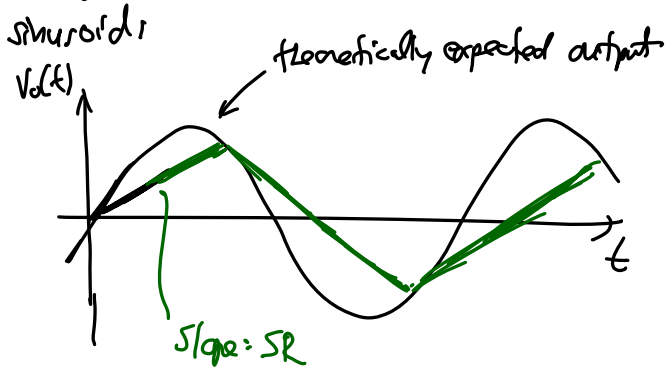

In terms of design variables:

$$SR = \frac{dV_o}{dt} = \frac{I_{xm}}{C_c} = \boxed{\frac{I_{xm}}{G_{m1}}\omega_{ult}A_o = SR}$$

$$C_c = \frac{G_{m1}}{\omega_{ult}A_o}$$

$\omega_{ult} = \omega$ @ $|a(j\omega)f| = 1$

To Increase SR:

1. Decrease G_{m1} ← transconductance of 1st stage
2. Increase ω_{ult} ← increase ω_2; limited by the Xistor freq. range
3. Use a larger A_o, if possible. (only if permitted by the application)

closed loop gain

over

Increasing SR via G_m-Reduction

① Emitter or Source Degeneration @ the Input Stage:

$SR = \frac{2I_1}{G_{m1}} \omega_{ult} A_0$ ← I_1 remains the same

$G_{m1} = \frac{g_{m1}}{1+g_m R_E}$ ↓ → SR↑

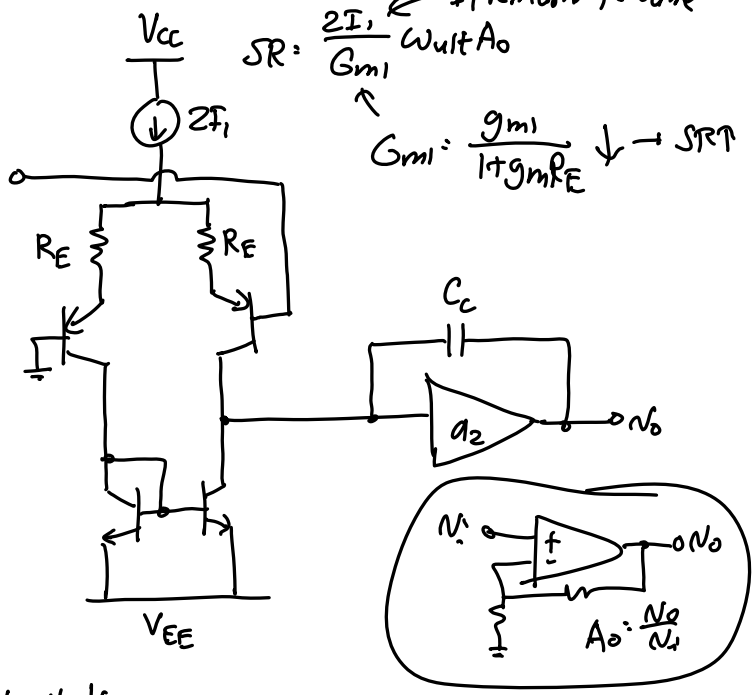

Limitations:

① R_E mismatch → V_{OS}↑
↳ must limit value of R_E to limit V_{OS}

② R_E↑ → gain↓ (SR-gain trade-off)

③ R_E contributes noise (thermal)

② FET Input Devices –

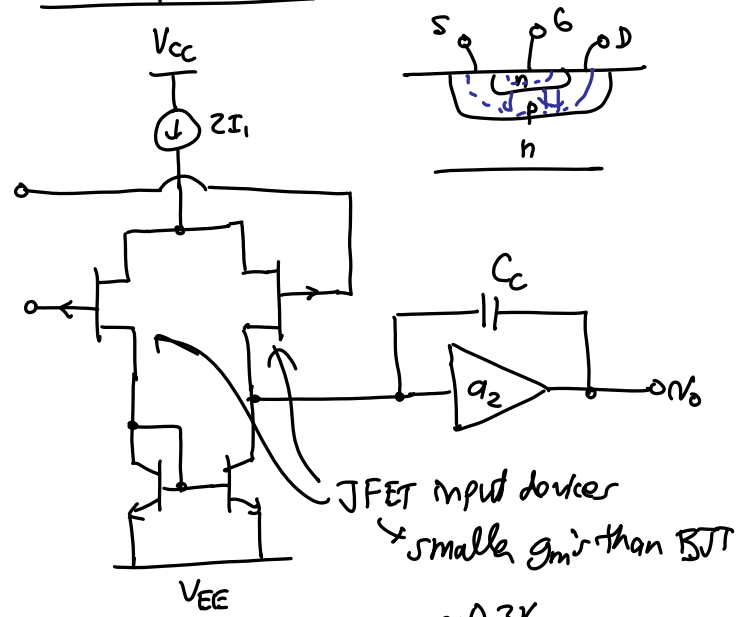

JFET input devices
↳ smaller g_m's than BJT

For FET's: $\frac{g_m}{I_D} \cong \frac{2}{V_{GS}-V_t}$ ← ~0.2V

For BJT's: $\frac{g_m}{I_C} = \frac{1}{V_T}$ ← ~26mV

>>

$$\frac{\text{FET SR}}{\text{BJT SR}} = \frac{\frac{I_D}{g_{mF}}\omega_{ult}}{\frac{I_C}{g_{mB}}\omega_{ult}} = \frac{\frac{V_{GS}-V_t}{2}}{V_T} = \frac{V_{GS}-V_t}{2V_T} \approx \frac{260}{26} \approx 10$$

Limitations:

① Higher V_{OS}

② Increased voltage noise.
(but decreased current noise)