Useful Inspection Formulas

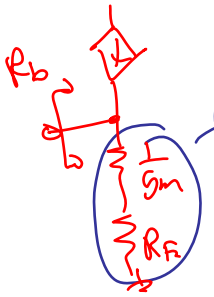

$(\frac{1}{g_m} \| R_E)(\beta+1)$

The General Case (Midband)

$r_e = \frac{1}{g_m}$

$R_{b} = R_B \| R_b$

$$R_b = (r_e + R_E)(\beta + 1) = r_\pi + (\beta + 1)R_E$$

$$R_e = \frac{r_\pi + R_B}{\beta + 1} \cong \frac{1}{g_m} + \frac{R_B}{\beta + 1}$$

$$R_c = r_o\left[1 + \frac{g_m R_E}{1 + (R_B / r_\pi)}\right]$$

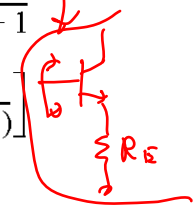

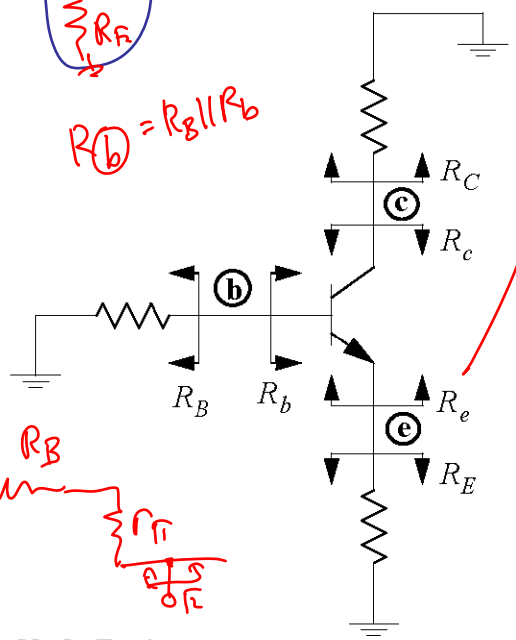

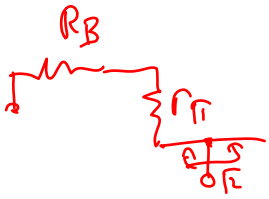

Base-to-Collector Gain:

$$\frac{v_c}{v_b} = -G_m R_{c} \qquad G_m = \frac{g_m}{1 + g_m R_E}$$

Emitter-to-Collector Gain:

$$\frac{v_c}{v_e} = -G_m R_{c} \qquad G_m = -\left(\frac{r_\pi}{r_\pi + R_B}\right) g_m$$

Base-to-Emitter Gain:

$$\frac{v_e}{v_b} = \frac{R_E \| r_o}{R_E \| r_o + r_e}$$

Node Resistances:

$$R_{c} = R_C \| R_c$$

$$R_{e} = R_E \| R_e$$

$$R_{b} = R_B \| R_b$$

High Frequency Analysis

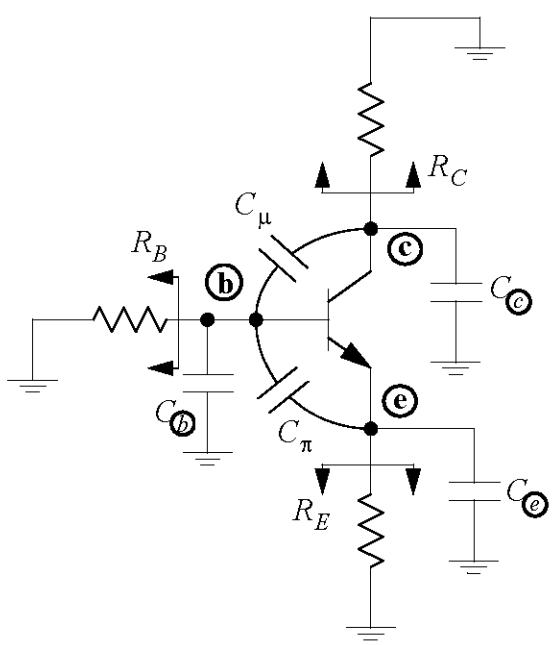

$$\omega_H = \frac{1}{\tau_b + \tau_c + \tau_e + \tau_{\mu o} + \tau_{\pi o}}$$

$$\tau_b = C_b R_b \qquad \tau_{\pi o} = C_\pi R_{\pi o}$$

$$\tau_c = C_c R_c \qquad \tau_{\mu o} = C_\mu R_{\mu o}$$

$$\tau_e = C_e R_e$$

$$R_{\pi o} = r_\pi \| \frac{R_B + R_E}{1 + g_m R_E}$$

$$R_{\mu o} = R_b + R_c + G_m R_c R_b$$

Frequent Cases (Midband)

Common Emitter

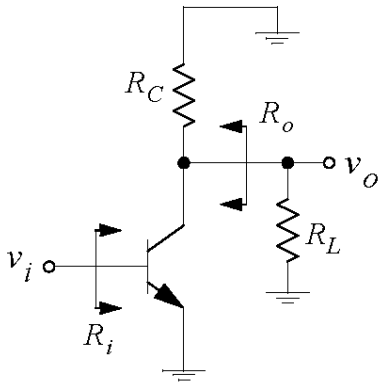

$$R_i = r_\pi$$

$$R_o = r_o \| R_C \approx R_C$$

$$\frac{v_o}{v_i} = -g_m(r_o \| R_C \| R_L) \approx -g_m(R_C \| R_L)$$

Common Collector (Emitter Follower)

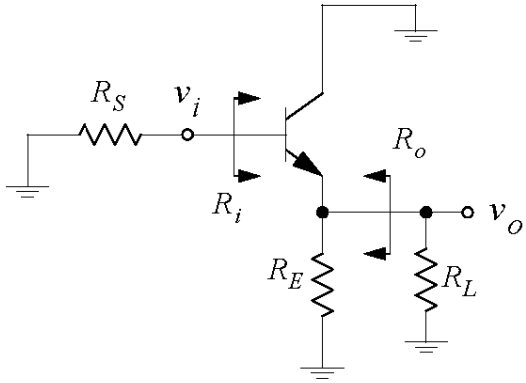

$$R_i = r_\pi + (\beta + 1)(r_o \| R_E \| R_L)$$
$$\approx r_\pi + (\beta + 1)(R_E \| R_L)$$

$$R_o \cong \left(\frac{1}{g_m} + \frac{R_S}{\beta + 1}\right) \| R_E$$

$$\frac{v_o}{v_i} = \frac{(r_o \| R_E \| R_L)}{(r_o \| R_E \| R_L) + r_e} = \frac{(\beta + 1)(r_o \| R_E \| R_L)}{(\beta + 1)(r_o \| R_E \| R_L) + r_\pi} \approx \frac{(\beta + 1)(R_E \| R_L)}{(\beta + 1)(R_E \| R_L) + r_\pi}$$

Common Base

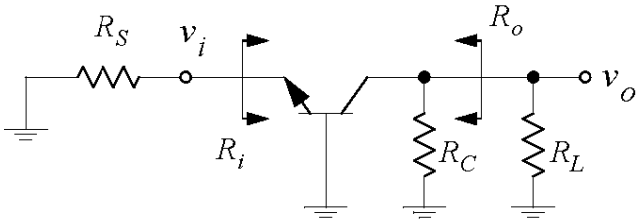

$$R_i = r_e \cong \frac{1}{g_m}$$

$$R_o = r_o(1 + g_m R_S) \| R_C \approx R_C$$

$$\frac{v_o}{v_i} \cong g_m(R_C \| R_L)$$