EE 140/240A | Inspection Analysis | CTN | 1

Useful Inspection Formulas

The General Case (Midband)

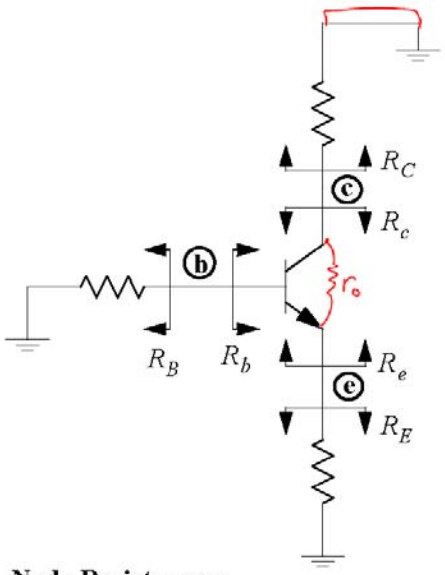

$$R_b = (r_e + R_E)(\beta + 1) = r_\pi + (\beta + 1)R_E$$

$$R_e = \frac{r_\pi + R_B}{\beta + 1} \cong \frac{1}{g_m} + \frac{R_B}{\beta + 1}$$ $(r_o >> R_C)$

$$R_c = r_o\left[1 + \frac{g_m R_E}{1 + (R_B / r_\pi)}\right]$$ $(g_m R_E << \beta_o)$ ↳ R_E = small $<< r_o$

Base-to-Collector Gain:

$$\frac{v_c}{v_b} = -G_m R_{ⓒ} \qquad G_m = \frac{g_m}{1 + g_m R_E}$$

Emitter-to-Collector Gain:

$$\frac{v_c}{v_e} = -G_m R_{ⓒ} \qquad G_m = -\left(\frac{r_\pi}{r_\pi + R_B}\right) g_m$$

Base-to-Emitter Gain:

$$\frac{v_e}{v_b} = \frac{R_E \| r_o}{R_E \| r_o + r_e}$$

Node Resistances:

$$R_{ⓒ} = R_C \| R_c$$
$$R_{ⓔ} = R_E \| R_e$$
$$R_{ⓑ} = R_B \| R_b$$

High Frequency Analysis

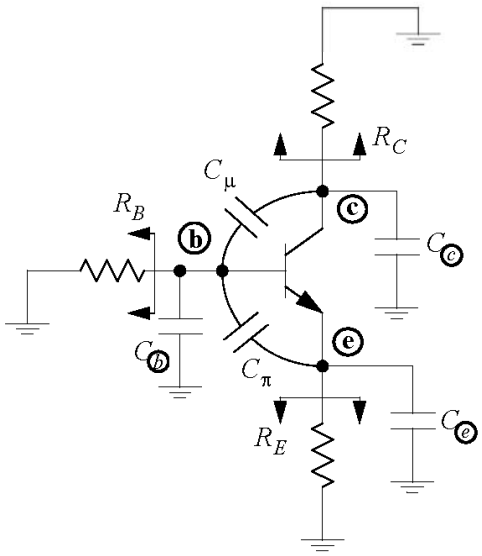

$$\omega_H = \frac{1}{\tau_{ⓑ} + \tau_{ⓒ} + \tau_{ⓔ} + \tau_{\mu o} + \tau_{\pi o}}$$

$$\tau_b = C_{ⓑ} R_{ⓑ} \qquad \tau_{\pi o} = C_\pi R_{\pi o}$$
$$\tau_c = C_{ⓒ} R_{ⓒ} \qquad \tau_{\mu o} = C_\mu R_{\mu o}$$
$$\tau_e = C_{ⓔ} R_{ⓔ}$$

$$R_{\pi o} = r_\pi \| \frac{R_B + R_E}{1 + g_m R_E}$$

$$R_{\mu o} = R_{ⓑ} + R_{ⓒ} + G_m R_{ⓒ} R_{ⓑ}$$

