EECS16A Touchscreen 2

TA, ASE, ASE, ASE

Sit with the same partner as last week, make sure you have brought the touchscreen you built

Last week: Soldering and Breadboarding

- Building the base of the resistive touchscreen
- Resistors in parallel and in series
- Debugging techniques
- Voltage divider intuition

This week: Resistive touchscreen

- Investigate a resistive touchscreen
  - Something that actually was used for a long time!
- Use voltage as a signal to determine position of touch
  - How?

Resistive touchscreen

- Physical touch results in physical contact between top and bottom layers
- Voltage dividers allow us to compute touch location

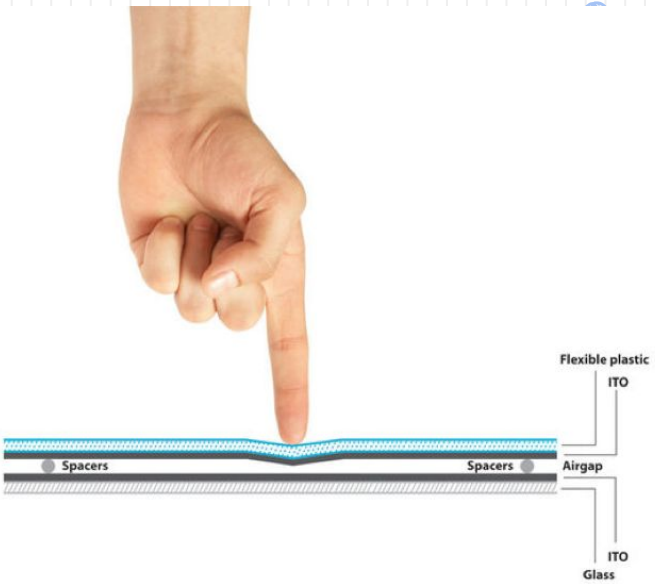

Resistive touchscreen

EX: Nokia N900, Nokia N97 Mini, LG Optimus, LG GW620, Nintendo DS

TM

Tools for today:

- Power Supply
  - Always set a current limit! (0.1 A)
- Multimeter - measuring device
- Launchpad - measuring device
- Voltage dividers
  - How we will detect location

Touchscreen theory (Note 13/14)

- **What's the voltage at the top?**
- **What's the voltage at the bottom?**
- Voltage at u2?

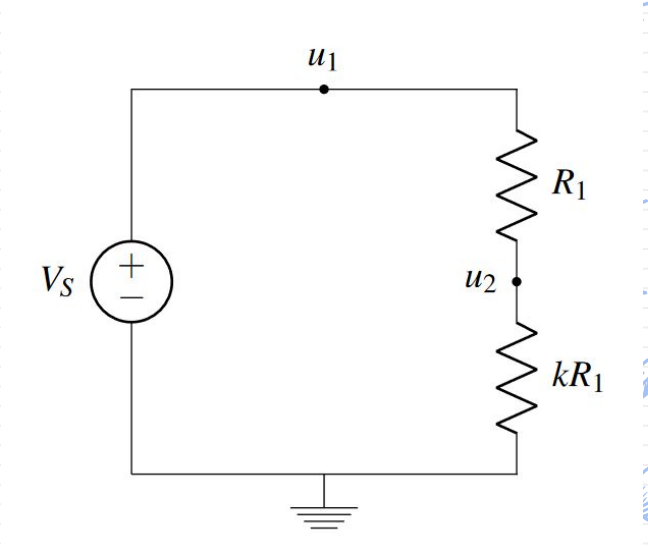

Touchscreen theory (Note 13/14)

- Voltage divider:

$$u_2 = V_s * \frac{kR_1}{kR_1 + R_1}$$

$$u_2 = V_s * \frac{R_1(k)}{R_1(k+1)}$$

$$u_2 = V_s * \frac{k}{k+1}$$

Independent of the value of R!

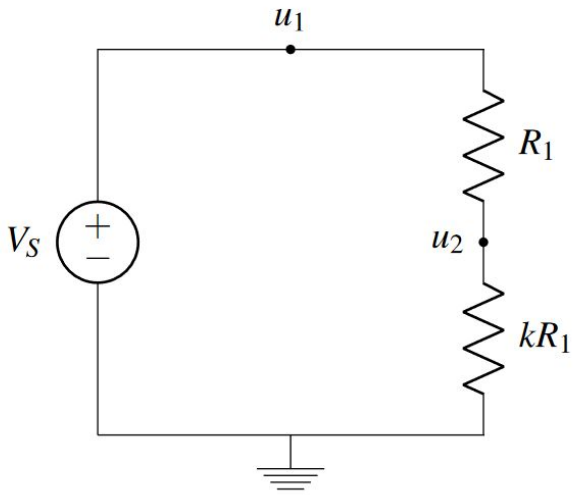

Building it up

- What are the voltages at u2 and u3?

$$u_2 = V_s * \frac{k}{k+1}$$

$$u_3 = V_s * \frac{k}{k+1}$$

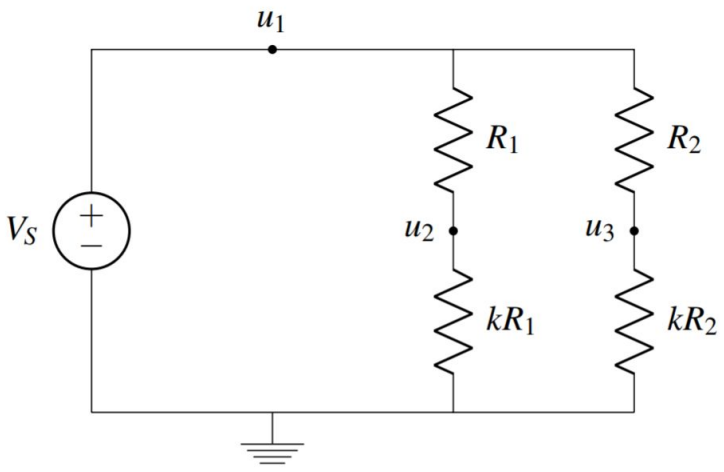

- **What's the voltage difference?**

The Rs cancel out! All the matters is the proportion between the top and bottom resistors.
In fact, **u3 and u2 are at the SAME VOLTAGE**

Building it up

- We know that u2-u3=0
- **How much current goes through R3?**

$$u_2 = V_s * \frac{k}{k+1}$$

$$u_3 = V_s * \frac{k}{k+1}$$

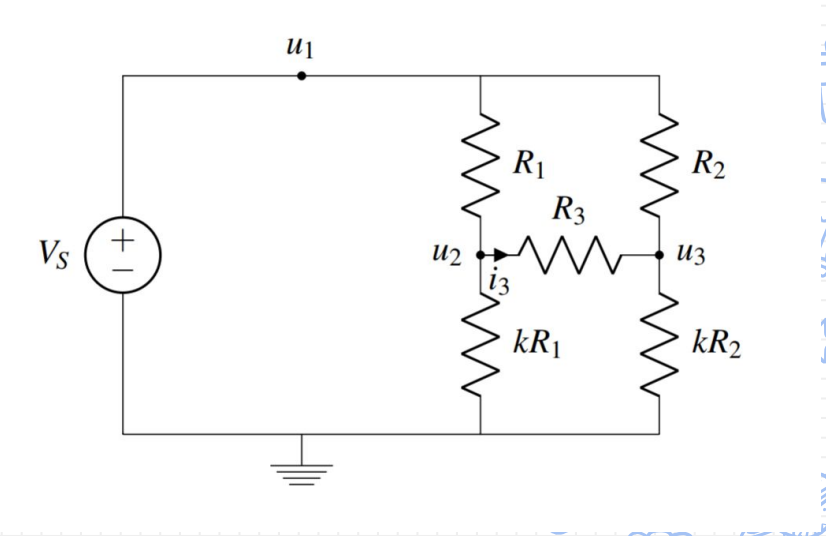

Building it up

- Add one more resistor divider…
- We get our touchscreen!

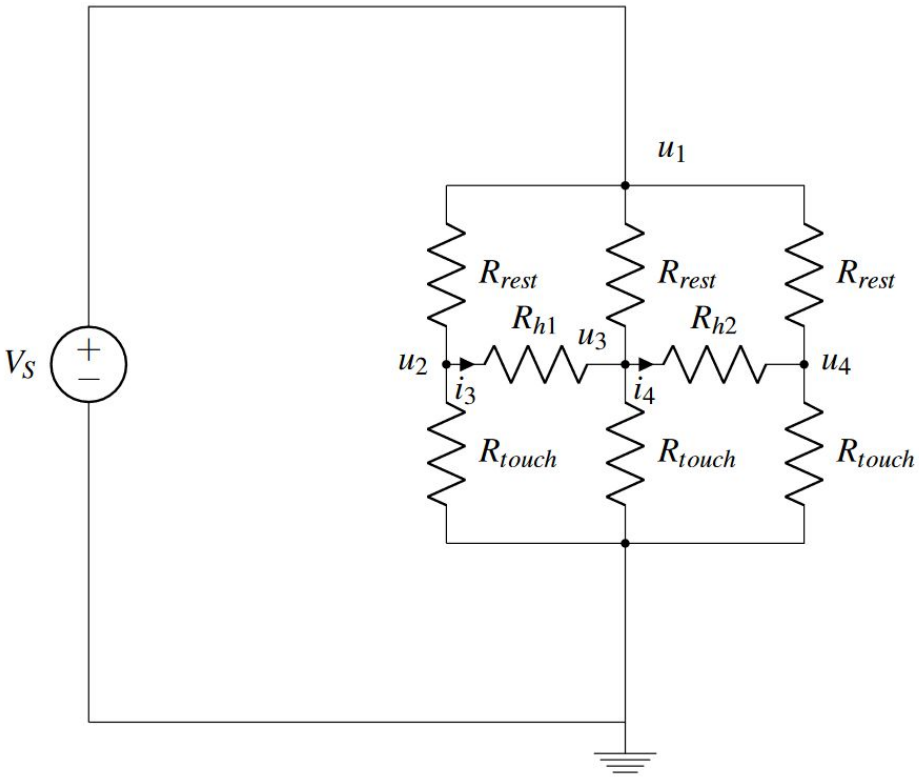

Resistive touchscreen - 2 layers

Bottom Layer: Resistive Layer

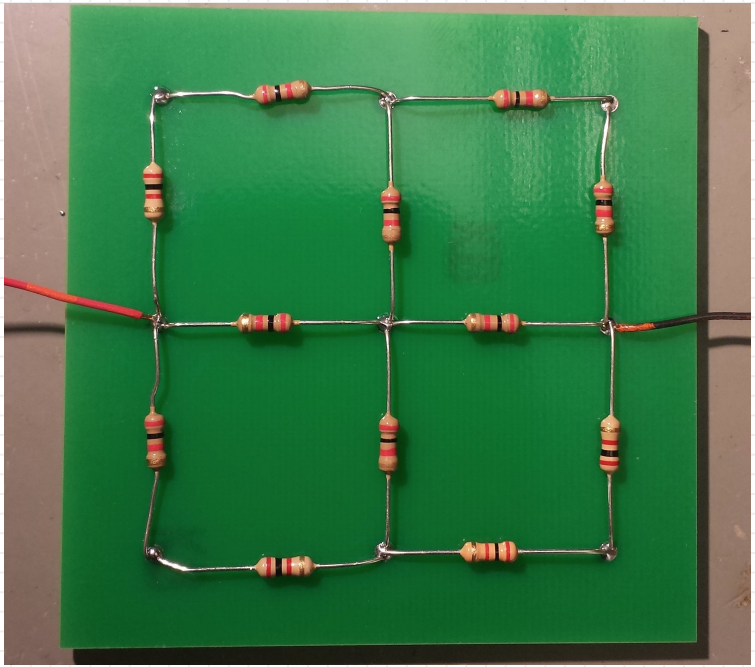

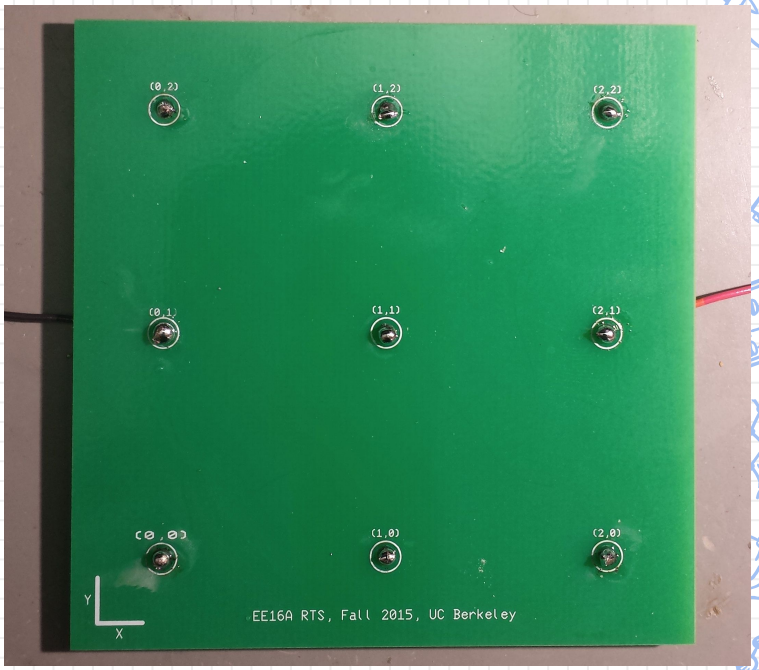

Resistive touchscreen - 2 layers

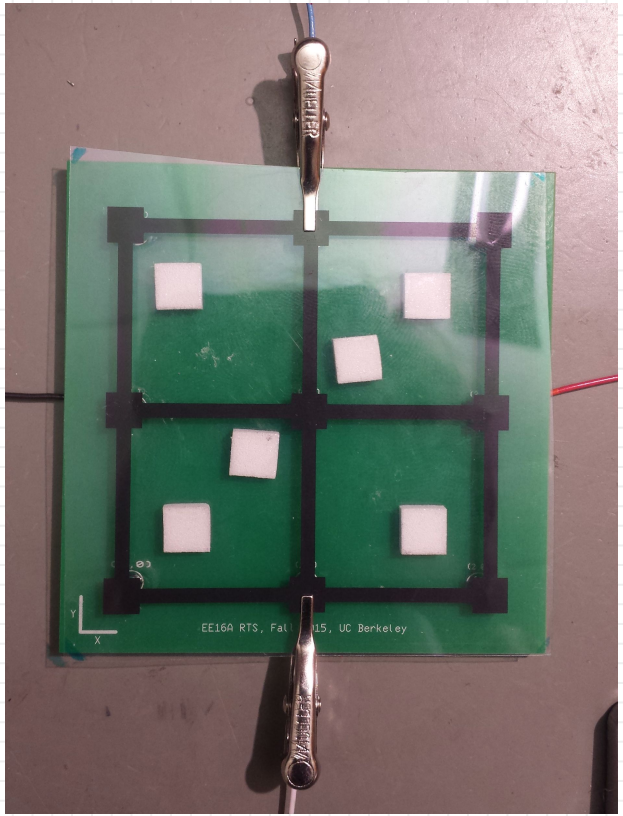

Top Layer:

Flexible Resistive Layer

What’s the difference?

- Nothing
  - The ink is a bunch of resistors
    - The resistor values don’t matter because we showed only the proportions matter for this circuit
  - Their circuit diagrams are the same
- One is flexible so we can actually move it to make contact
- We use two so that we can measure with one and apply voltage to the other without changing our circuit

Computing a location

- Measure some voltages, compute location based on value
- **Can you find any two horizontal locations that would output the same voltage?**
- **What about vertical?**

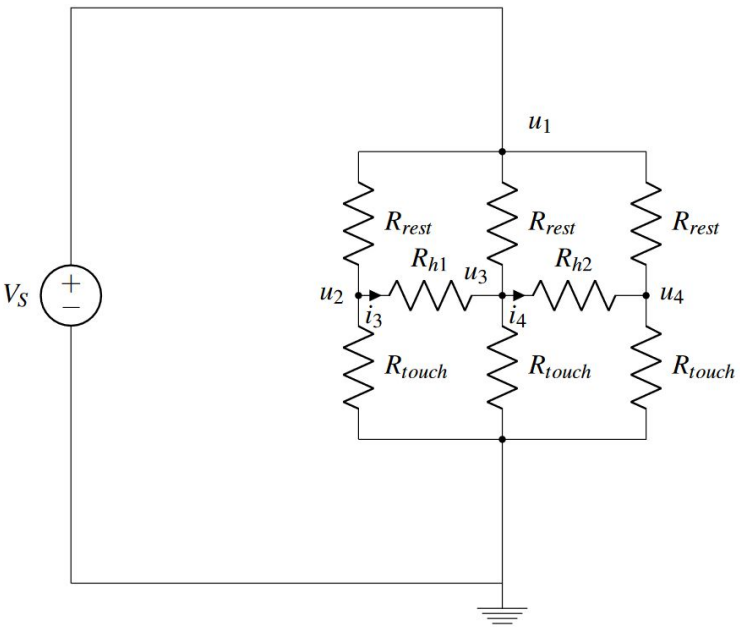

Computing a location

- We can only determine vertical position
- What about the other orientation?

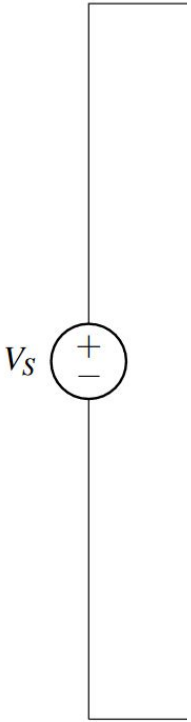

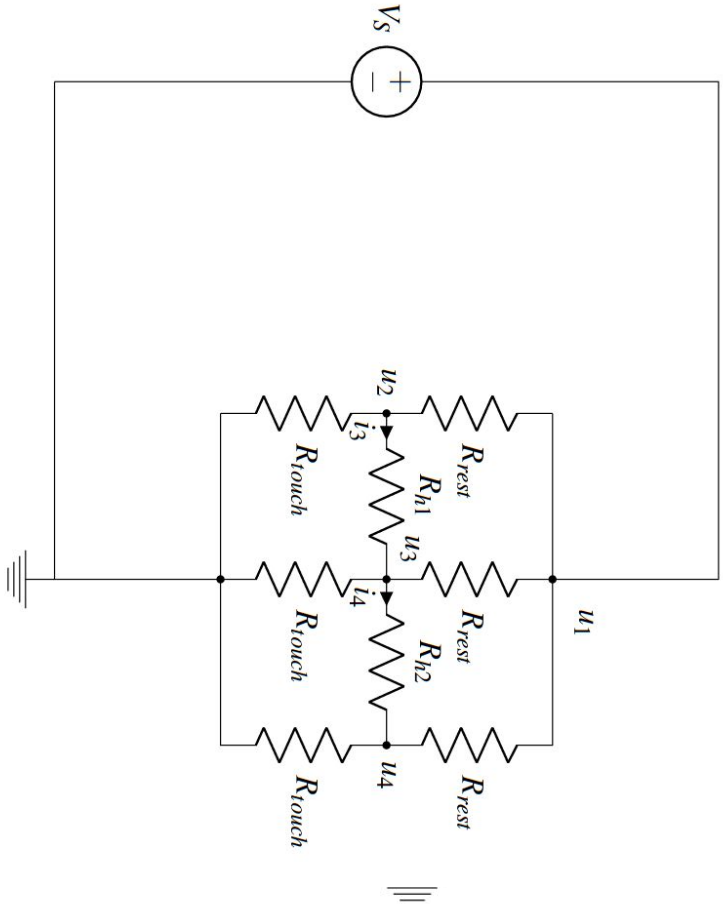

What if we turned it sideways?

Computing a location

- Let's turn it sideways
  - Apply voltage so we power the horizontal direction
  - Find "vertical" location in horizontal orientation
- This gives horizontal location

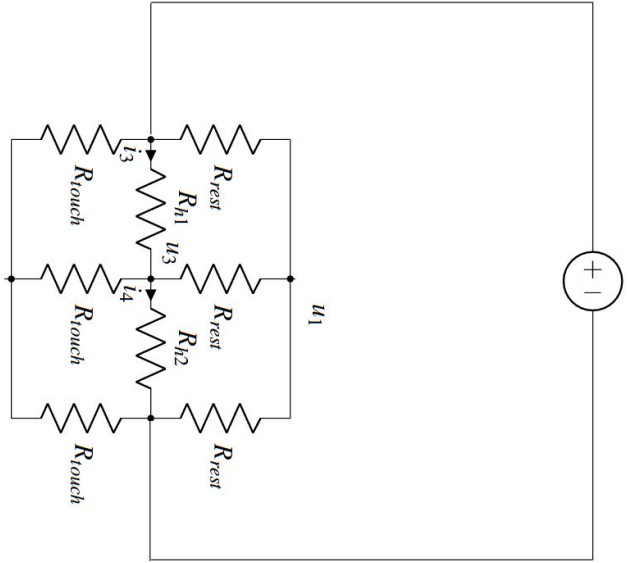

Computing a location

- If we take two readings, one in each dimension can uniquely determine our location in 2D
- More on this in the lab

Taking the limit

- 9 touch points is kinda... meh
- **How do we get more?**

Taking the limit

- Add more resistors!

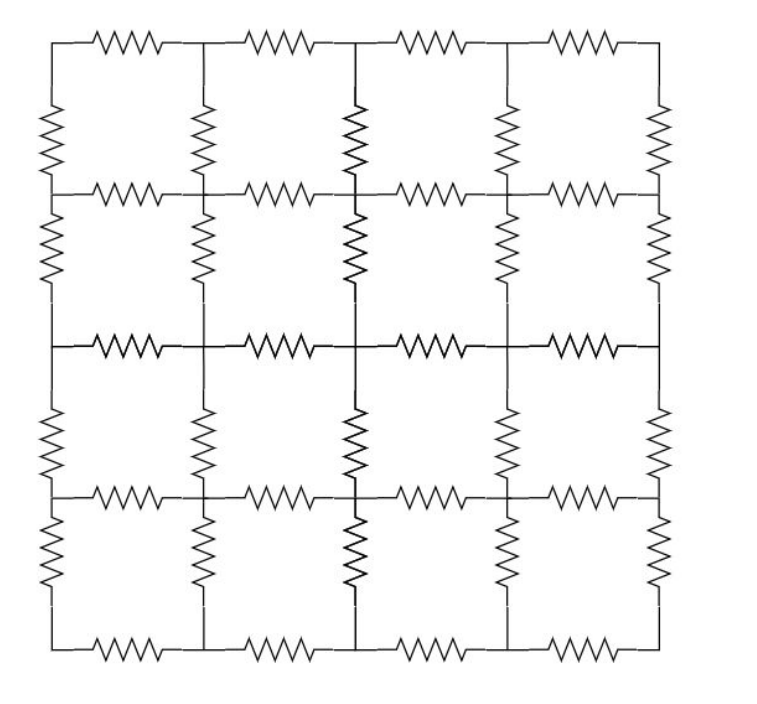

Taking the limit

- But what if I don’t want to increase the size of the circuit
  - Add more, but make the resistors smaller!
- What happens as the resistors approach infinitely small sizes?
  - Isn’t that just a resistive sheet?
  - This is how all resistive touchscreens work
  - Review lecture [note 12](), [note 13]()

Notes

- Make sure **ink side** of the plastic film is **facing down** towards the resistors (rougher side of the film)
- There are coordinates on the PCB (**use them**)
- Foam blocks and film are on the TA desk
- Make sure you close serial monitor before running the ipython code
- Read **carefully** for which coordinates you should be connecting the multimeter and the power supply to
  - One wire will be free & 3 wires will be in use