EECS16A Touchscreen 3A

TA, ASE, ASE, ASE

Announcements

- Midterm 2 on Monday 11/4 8–10pm
- Schedule:
  - This week: Touch 3A
  - Next week: Buffer (Img 3, Touch 1, 2, 3A)
  - The week after: Touch 3B
- This lab is the first of a two-part lab (3A and 3B) - make sure to stick with the same lab partner! (exchange contact information)

Last time

- Resistive touchscreen
  - Use voltages as signals
  - Two voltage dividers perpendicular to each other
- Why are resistive touchscreens obsolete?
  - Single touch only
  - Moving parts and complicated structure

Capacitive Touchscreens

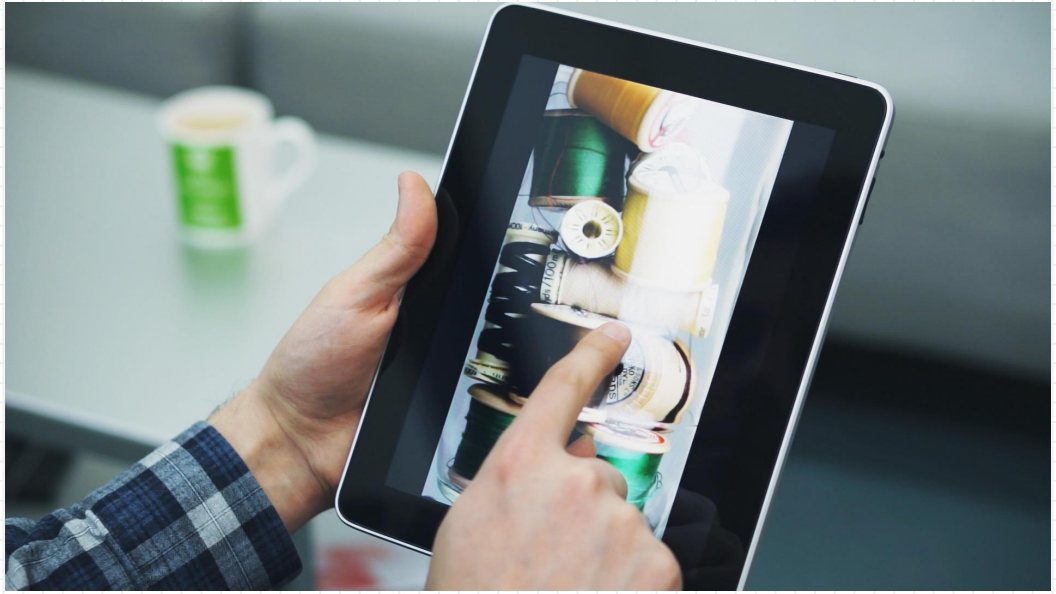

This week: Capacitive touchscreen

- Today: capacitive touchscreens
  - Exploits capacitive properties of finger/body
  - Touching the screen changes the capacitance
- A lot better!
  - No moving parts
  - Multi-touch is possible
  - More sensitive
- How to measure capacitance?

Capacitance and the touchpad

What is a capacitor and how does it work?

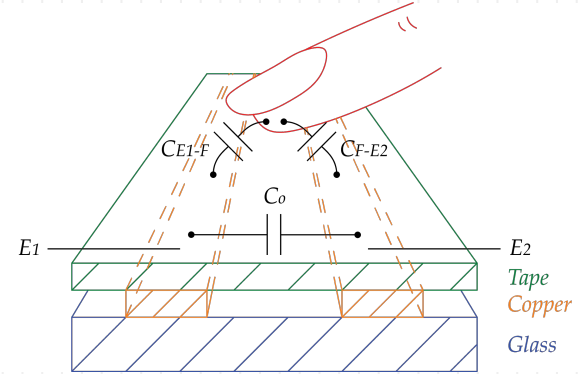

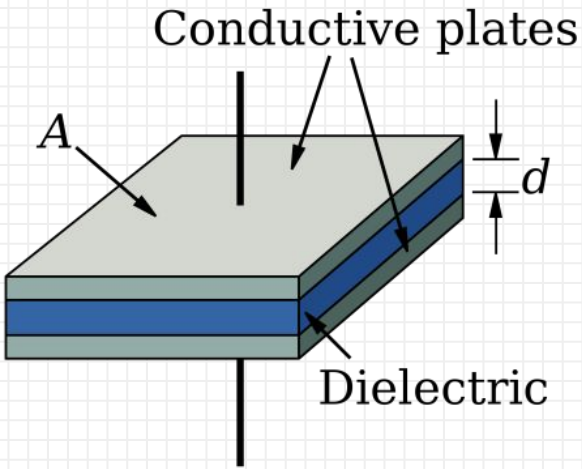

Touching changes capacitance

- Screen = some capacitance
- Screen + finger = different capacitance

Let’s try to figure out a way to detect this change in capacitance!

How to detect changing capacitance?

- Not so easy to directly measure
- Instead, we try to measure something that a change in capacitance would create
  - Current can be hard to measure directly
  - Changes in voltage are easy to see

What do we know about capacitors?

$$I = C\frac{dV}{dt}$$

- Note that if current is constant, voltage is just linear with time
  - integrate to get an expression
- Having a linear voltage signal is easy for us to read!

Finding the exact relationship V(t) (for constant current)

$$I = C\frac{dV}{dt}$$

$$\frac{dV}{dt} = \frac{I}{C}$$

$$\int_0^t dV = \int_0^t \frac{I}{C}\,dt$$

$$V(t) - V(0) = \frac{I}{C}t$$

$$V(t) = \frac{I}{C}t + V(0)$$

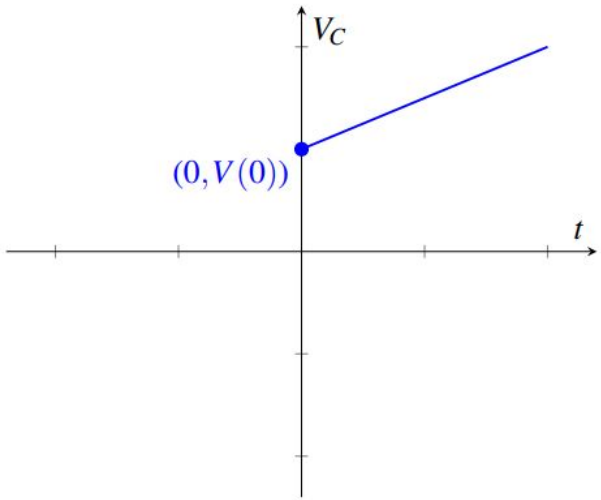

- Voltage increases with time!
- Note: we're assuming I is constant
- **What's the slope of this line?**

Finding the exact V(t)

Looks good right?

$$V(t) = \frac{I}{C}t + V(0)$$

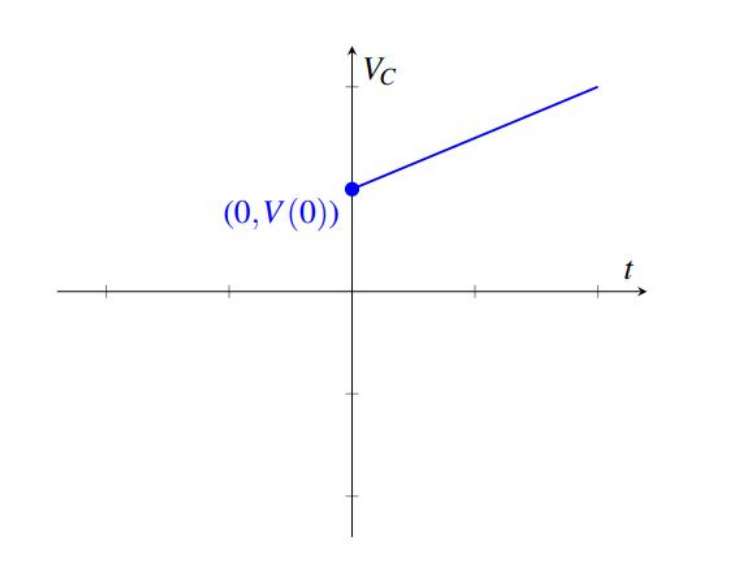

Issues with this model

- How high can V(t) get? Too high.
  - In theory: infinity. In practicality: maybe not quite infinity, but still bad
- We're going to need to discharge it to make its usage practical
  - Periodically apply a negative current

$$V(t) = \frac{I}{C}t + V(0) \quad \rightarrow \quad V(t) = -\frac{I}{C}t + V(0)$$

- Two different slopes!
- **First, what is the shape of the current we apply? (The graph of I(t)?)**

Applying negative current: The square wave

- A wave that only has two values: high and low
- We will use this to charge and discharge the capacitor
- High: Positive 10mA
- Low: Negative 10mA
- Note: We have 0mA in the beginning to set the initial condition

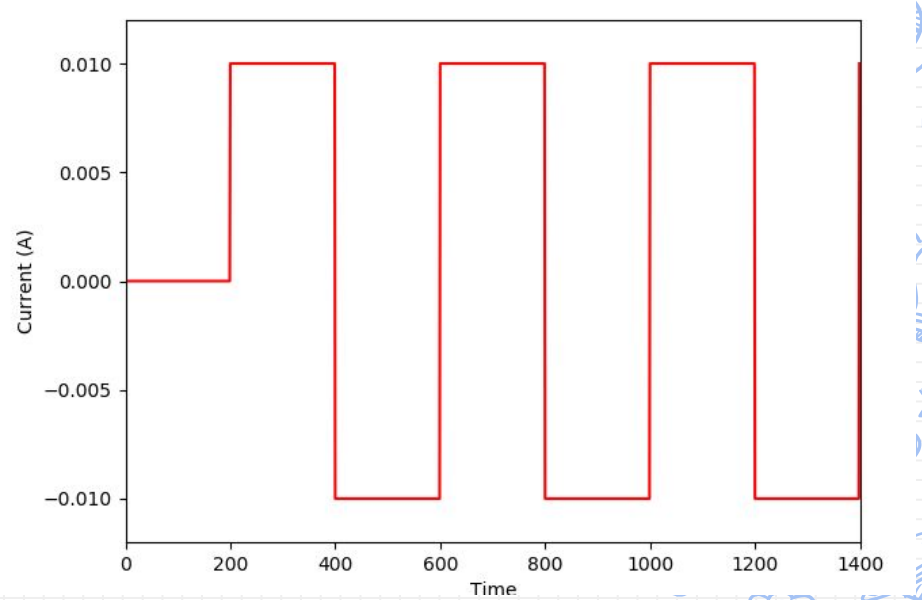

New waveforms

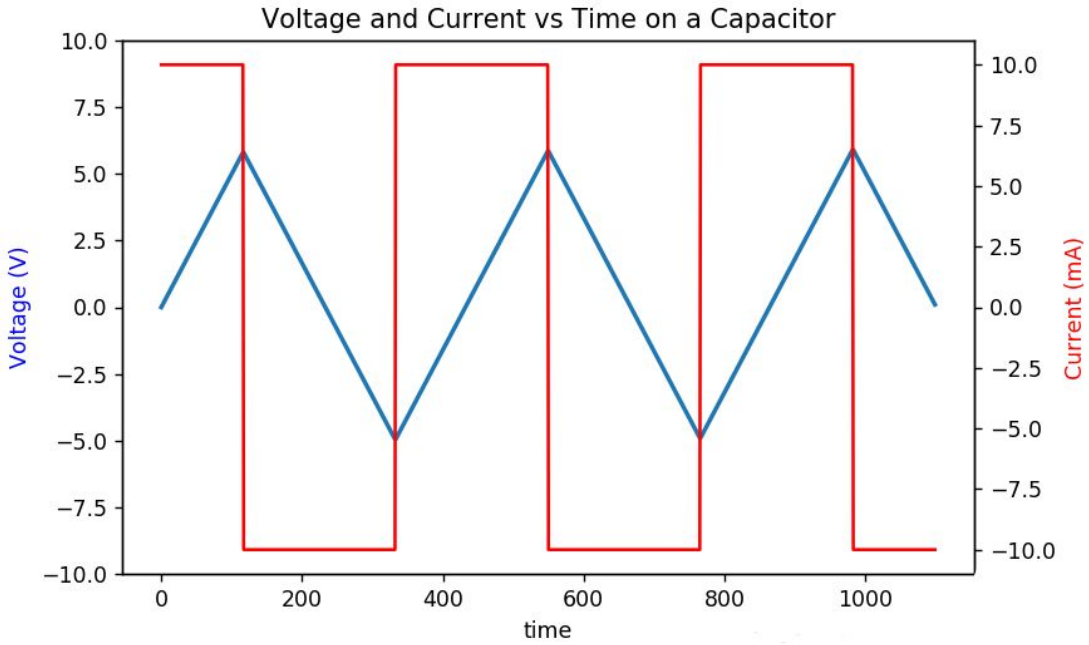

Note: V(0) = 0 in this plot

Touch-ups

- We know how to measure voltage
- Reminder: we want to detect touch by seeing a change in voltage
- We need to quantify what it means for us to touch the screen

How does our finger affect the system?

- **First, how does a touch affect the capacitance?**

$$C_{series} = \frac{1}{\frac{1}{C_1} + \frac{1}{C_2} + \ldots \frac{1}{C_n}}$$

$$C_{parallel} = C_1 + C_2 + \ldots C_n$$

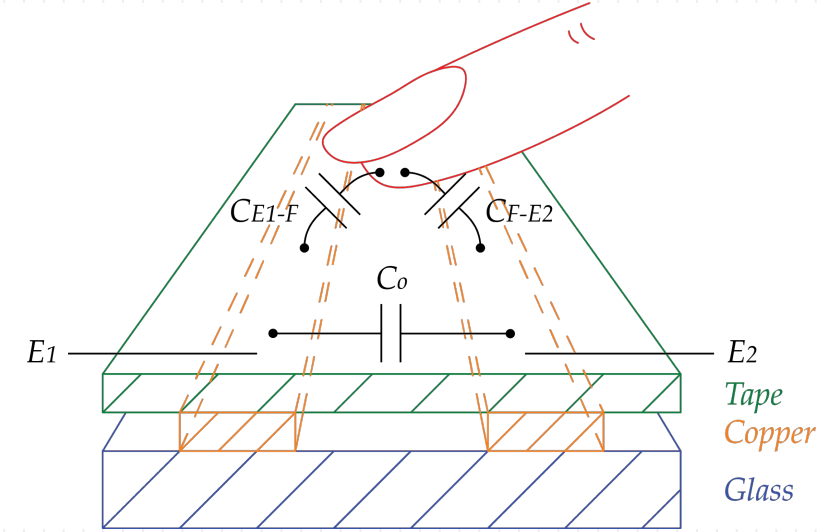

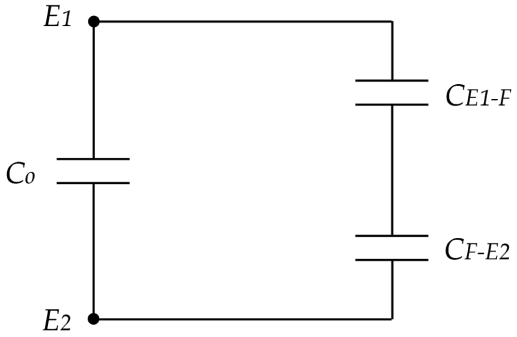

How does our finger affect the system?

- C increases
- How does the touch affect our voltage waveform?

$$V(t) = \frac{I}{C}t - V_0$$

- **What happens to the slope?**

Detecting touch

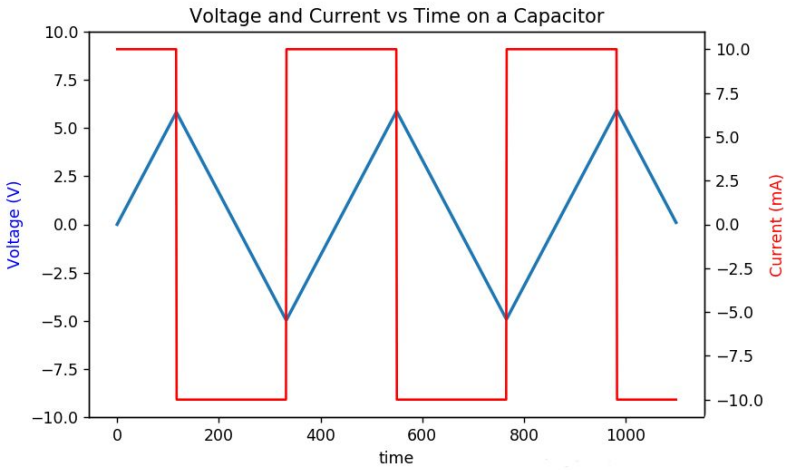

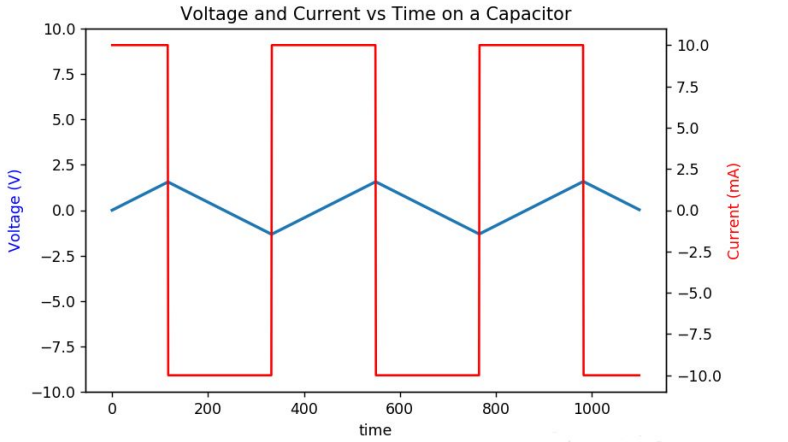

- How do we detect this?
  - Want to compare something about these two waveforms. **What**?

Difference In Peak Voltages

- Idea: compare the peaks to some reference voltage
  - Higher peak: no touch
  - Lower peak: touch

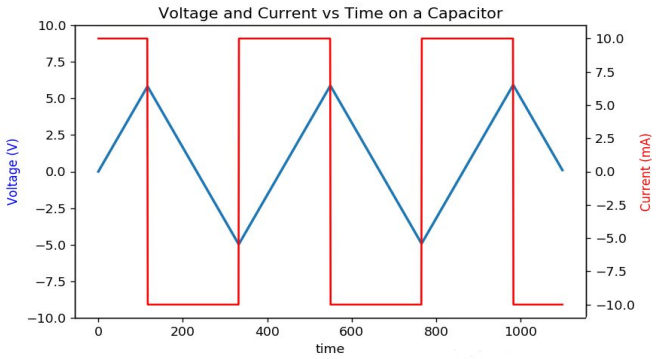

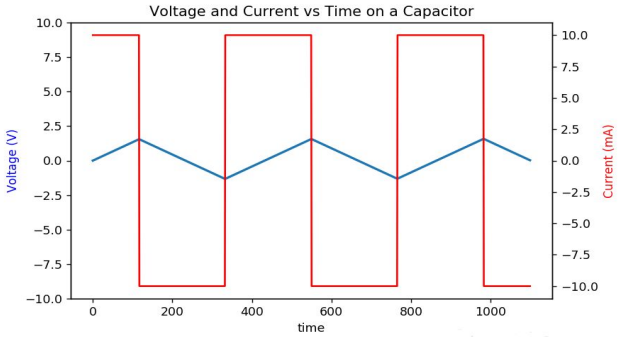

Comparing Voltage using Op Amps

- Has 4 inputs
  - V+
  - V-
  - Vdd (Vs+)
  - Vss (Vs -)
- Has 1 output
  - Vout

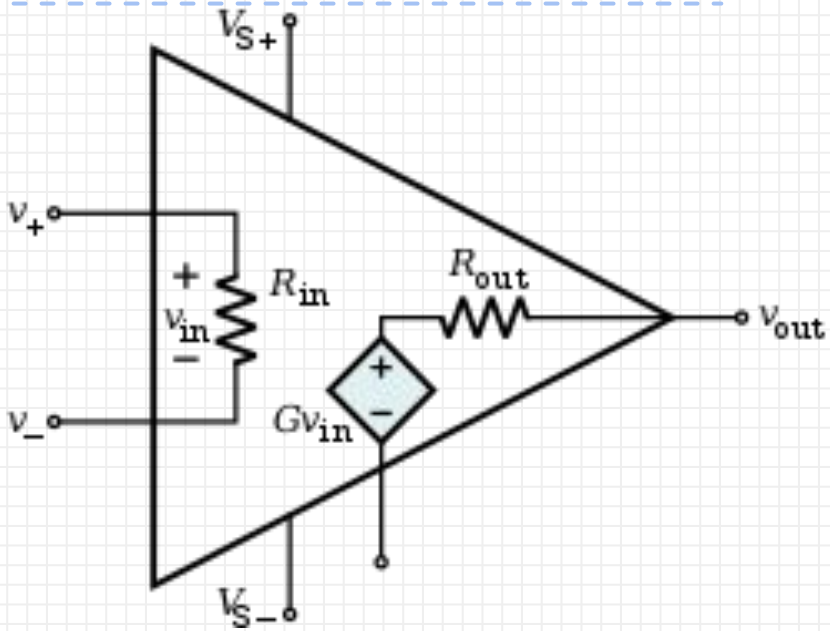

- Vdd and Vss are fixed power sources and V+ and V- may vary
- Vss must be < Vdd

What is Vout?

- Vout = Gain*(V+ − V-), Gain = large pos num
- Vss <=Vout <= Vdd

- In a comparator, the gain is so large that Gain*(V+ − V-) will always end up outside of the [Vss, Vdd] range
  - Vout is always either Vss or Vdd
  - Which one it is depends on V+ and V-

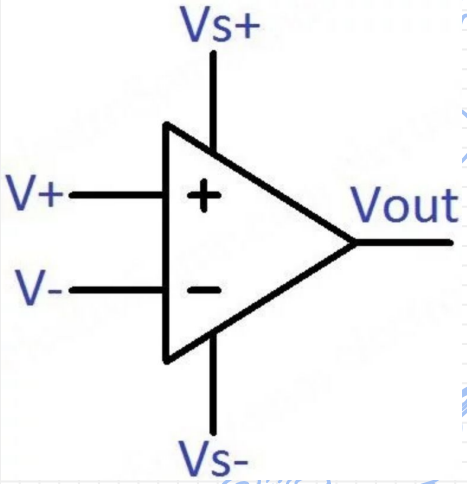

What is Vout? Remember Vss<=Vout<=Vdd

- Let V- be a constant value, V_ref
- **When V+ > V_ref**
  - (V+ − V_ref) > 0
  - Vout = pos * large positive gain
  - **Vout = Vdd**
- **When V+ < V_ref**
  - (V+ − V_ref) > 0
  - Vout = neg * large positive gain
  - **Vout = Vss**

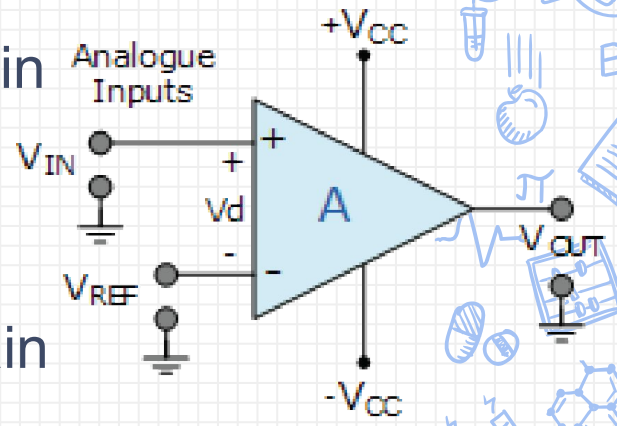

Comparators

- Compares input voltage at positive terminal to a reference voltage at negative terminal

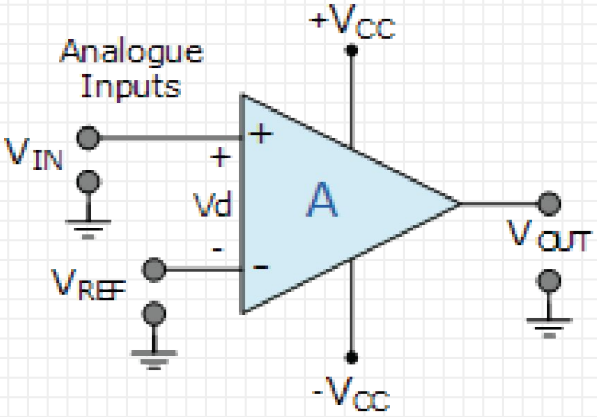

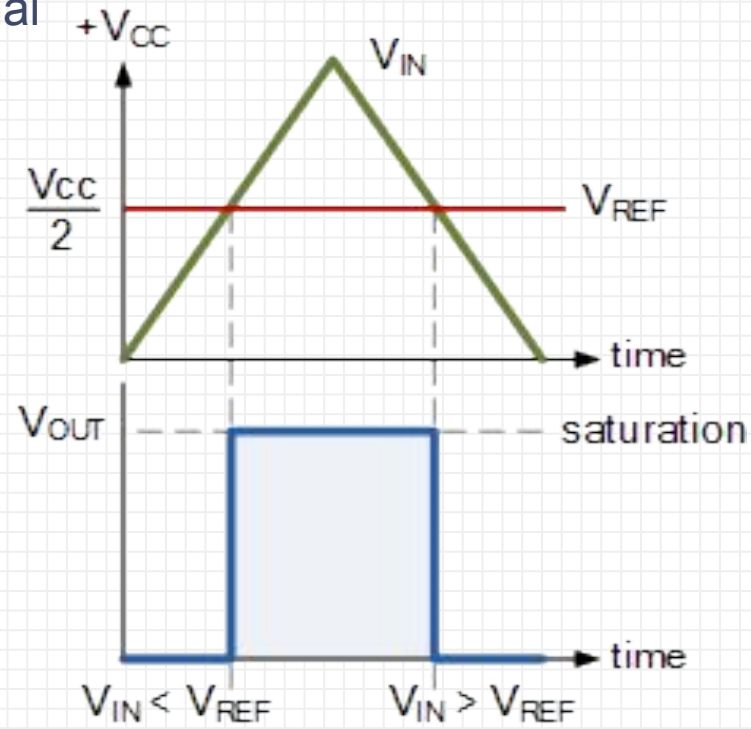

If $V_{IN} > V_{REF}$ then $V_{OUT} = +V_{CC}$
If $V_{IN} < V_{REF}$ then $V_{OUT} = -V_{CC}$

Completing actuation

- Use comparator to visualize the difference
- We can actuate anything we want, but to visually tell if we're touching, we can use an LED
- Two outputs:
  - Touching: -5V
  - No touching: a square wave
- LED will turn on the voltage across it is high enough!

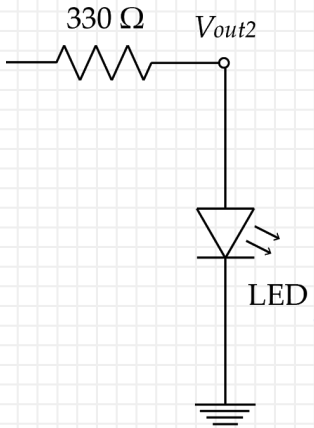

How do we implement?

- Ideal current sources like this do not exist in lab (for red square wave)
- This week we will generate the blue triangle shaped voltage wave using a function generator!
  - Instead of using the current source + capacitor

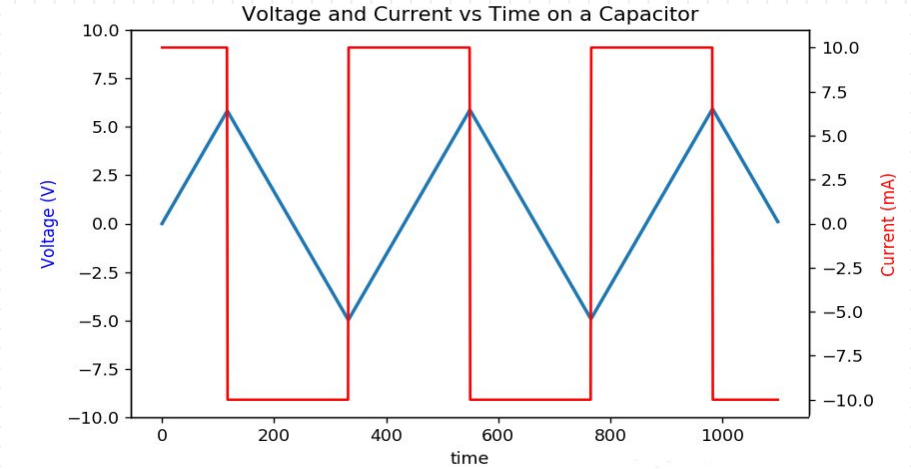

Sign up for buffer lab next week if you're missing a lab: tinyurl.com/buffer-fa19

Notes

- Materials: 2 copper strips, glass slide, tape, solder
- Only need a bit of tape and enough solder for two connections
- Remember to **remove the backing of the copper strips** [they are adhesive]
- **Make sure the copper strips span the entire length of the glass slide**