EECS16A Touchscreen 3B

Sit with the same lab partner as in 3A!

TA, ASE, ASE, ASE

Announcements

- Congrats on finishing the circuits midterm!
- Wrapping up circuits with Touch 3B
- Can use your own computer for this lab

Last time: Touch 3A

- Simulated a touch-sensing circuit
  - Current source onto cap gave $V(t) = \frac{I}{C}t + V_0$
  - Periodically charging and discharging gives a triangular shaped waveform
- **What changed between touch and no touch?**
  - Can see this change with a comparator!

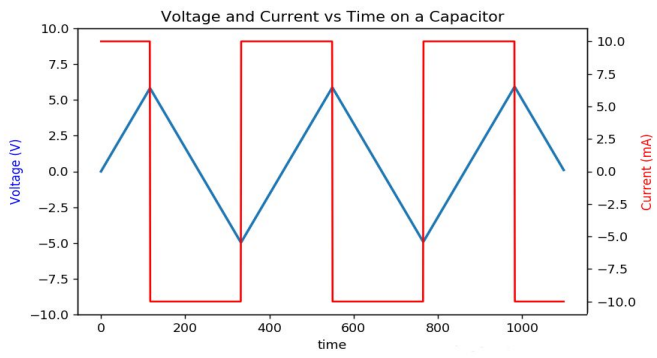

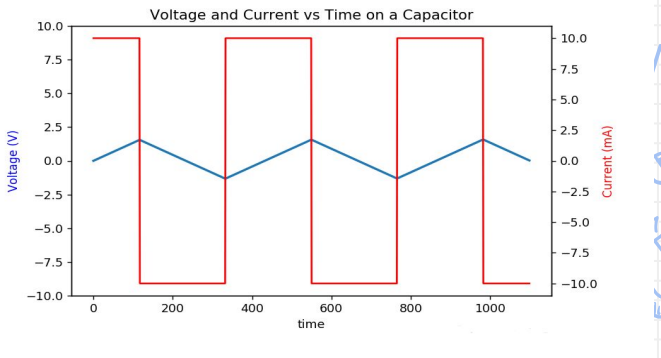

Last time: Touch 3A

- Implemented a Comparator and actuated an LED
- Problem: we don’t have ideal square current sources
  - Need another way to implement last lab’s waveforms (the triangle wave output)
  - How do we go about creating a similar system that still fits our model?

This week: Touch 3B

- Explore an alternative to ideal current sources
  - Use our new (and proven) op amp skills
- Build a complete system that will detect touch and actuation

Electronic systems: A review

- Sensing is only a part of a complete system. Most systems perform 3 tasks:
  - Sense (Physical to Electrical)
  - Process (Signal Conditioning)
  - Actuate (Electrical to Physical)

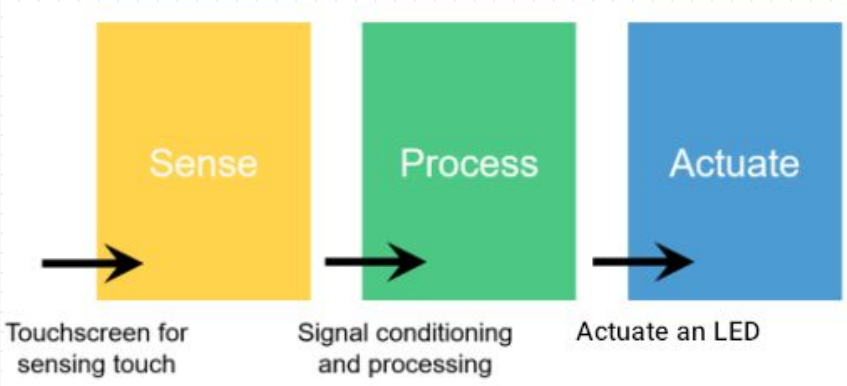

Building a current source (Note 20)

- Need a circuit that outputs a constant current regardless of voltage across
- What we have:
  - Voltage sources
  - $V = IR$ relationship for resistors
  - Note 20's guidance

First attempt at a current source

- If we have a voltage source and a resistor then we can create a “current source”
- The current is just (Vs-0)/Rs *since the other side is 0V*

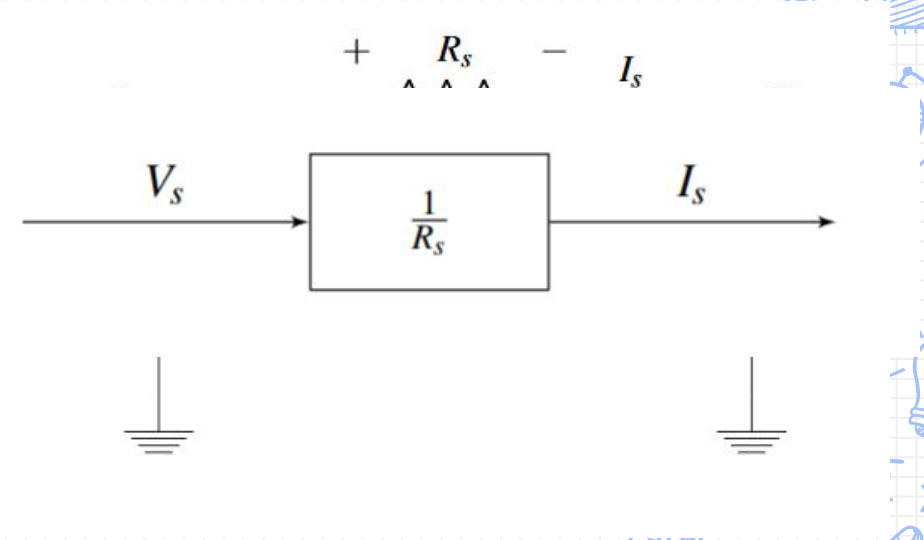

First attempt evaluation

- Ok, now let's attach our load
- Assume that the element is a resistor of value RL
- **Does this work?**

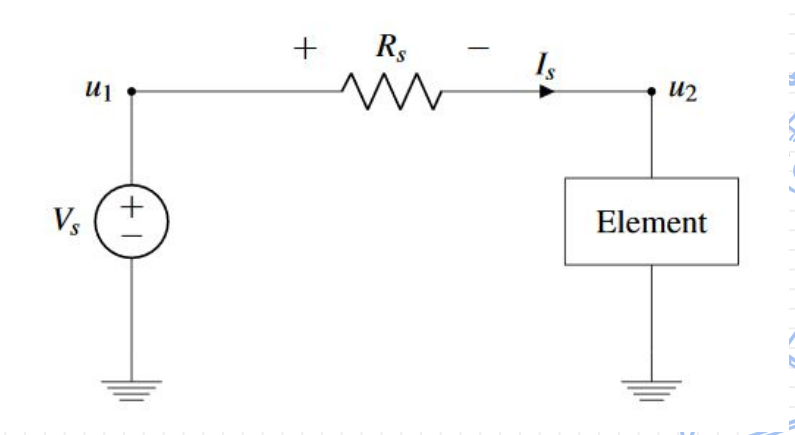

NOPE, it changes the current

$$I_s = \frac{V_s}{R_S + R_L}$$

Try again

- The issue here is that we had $I_s = \frac{V_s - 0}{R_S}$
- But a load made it so Rs isn't connected to 0 on the other side
- We need to set the u2 node voltage to 0 for this to work
- **Do you know anything that can force nodes to 0V?**

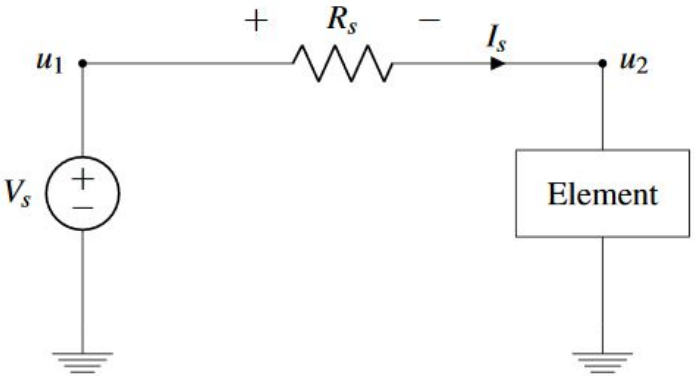

Note 20: An “almost” current source

- We can use an op amp!
  - GR #1: No current going in to op amp
  - GR #2: U+ = U-, so let’s make one of them 0V
    - **What must be true for this to hold?**

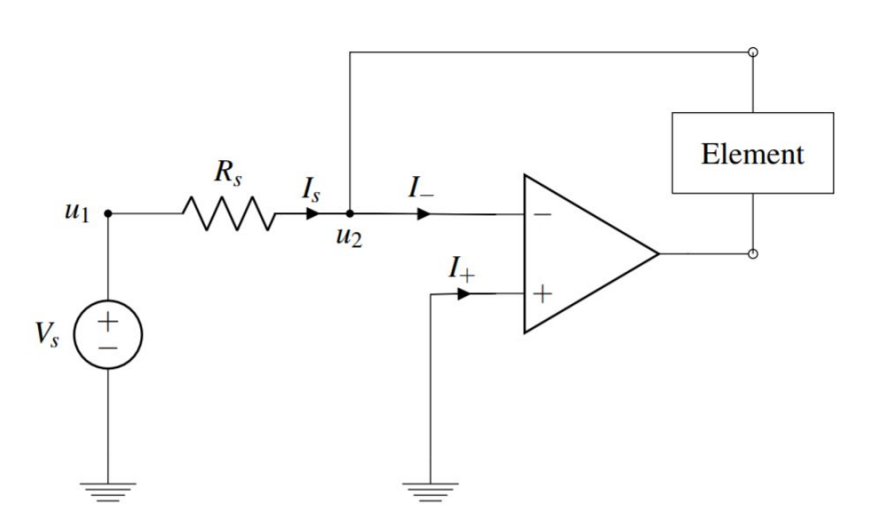

Note 20: An “almost” current source

- Since we are in negative feedback, $u_2 = 0V$
  - $I_s = \frac{V_s - 0}{R_S}$
- All current will go to the element, since $I_- = 0$

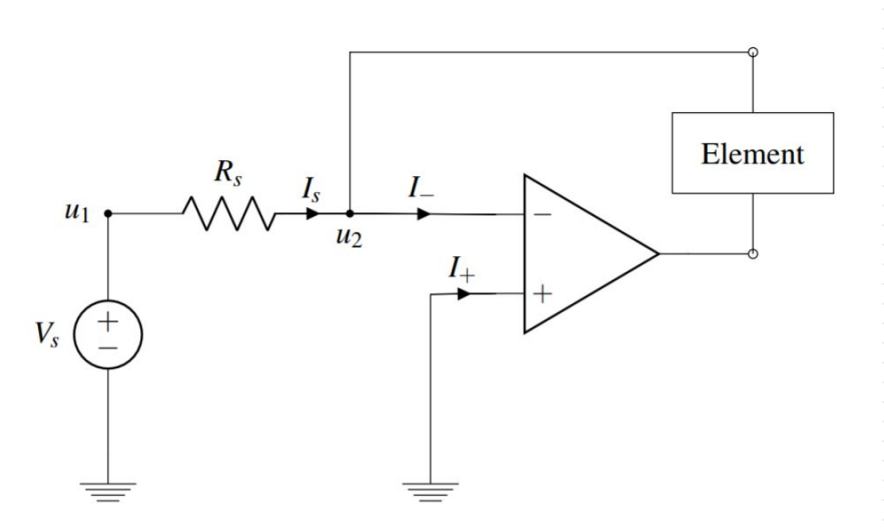

Sensing a completion

- Hook up our capacitive touch screen
- We get a constant current through the capacitor
- **What's the output of this circuit?**

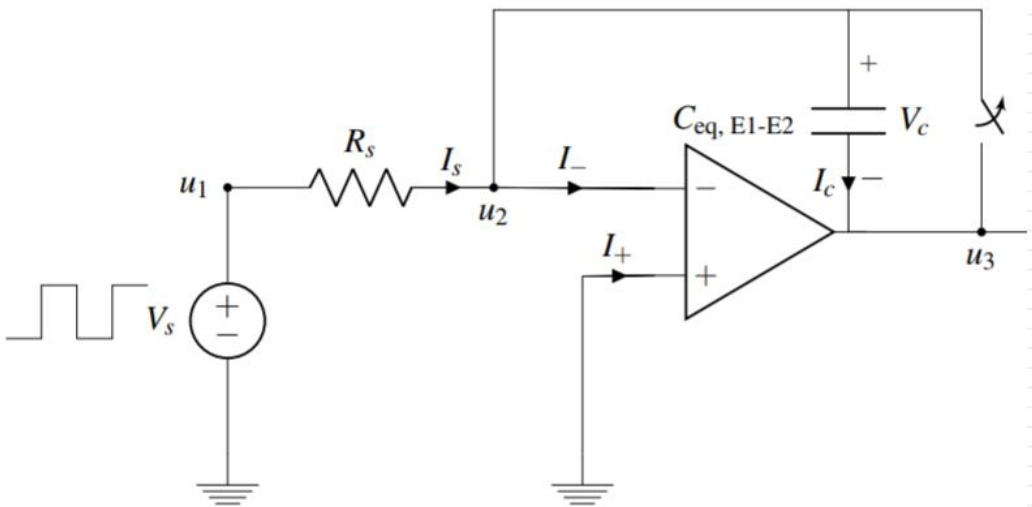

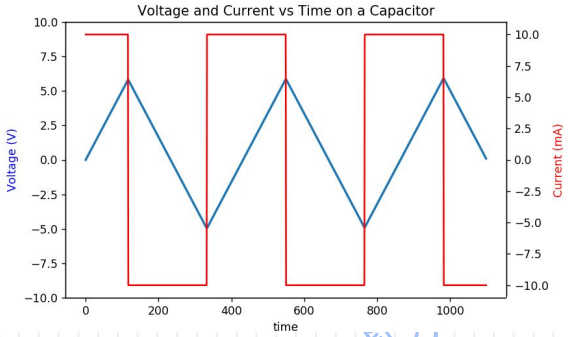

Note 20: An “almost” current source

- Constant current is cool, but we want periodic current to discharge the cap.
- What if we periodically switch voltage?

$$I_S = \frac{V_s}{R} \longrightarrow I_S = \frac{-V_s}{R}$$

An alternate viewpoint

- Note that the output of this circuit is $V_{out} = -\frac{1}{R_s C}\int_0^t V_s dt$
- It's also an integral, just like last time.
  - New circuit is an "almost current source" or just trading current for voltage.
- We're now integrating a constant voltage instead of a current, but the net result is the same as last time
- *We traded one type of input for another!*
- *Variable voltage sources do exist, so this is good! What are they like though?*

What’s our new input?

- Function generator
- Can create different waves
- Treat it as a non-constant voltage source
- Now we can make the “almost current source” of our dreams!

Processing the rest of our system

- Our circuit behaves as intended
- We can feed the new signal into our comparator circuit from last time

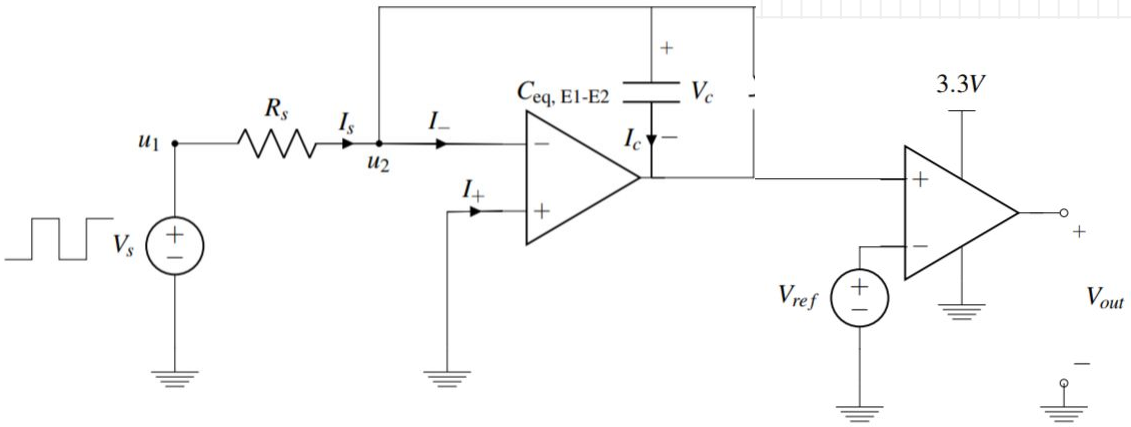

Our real-world circuit

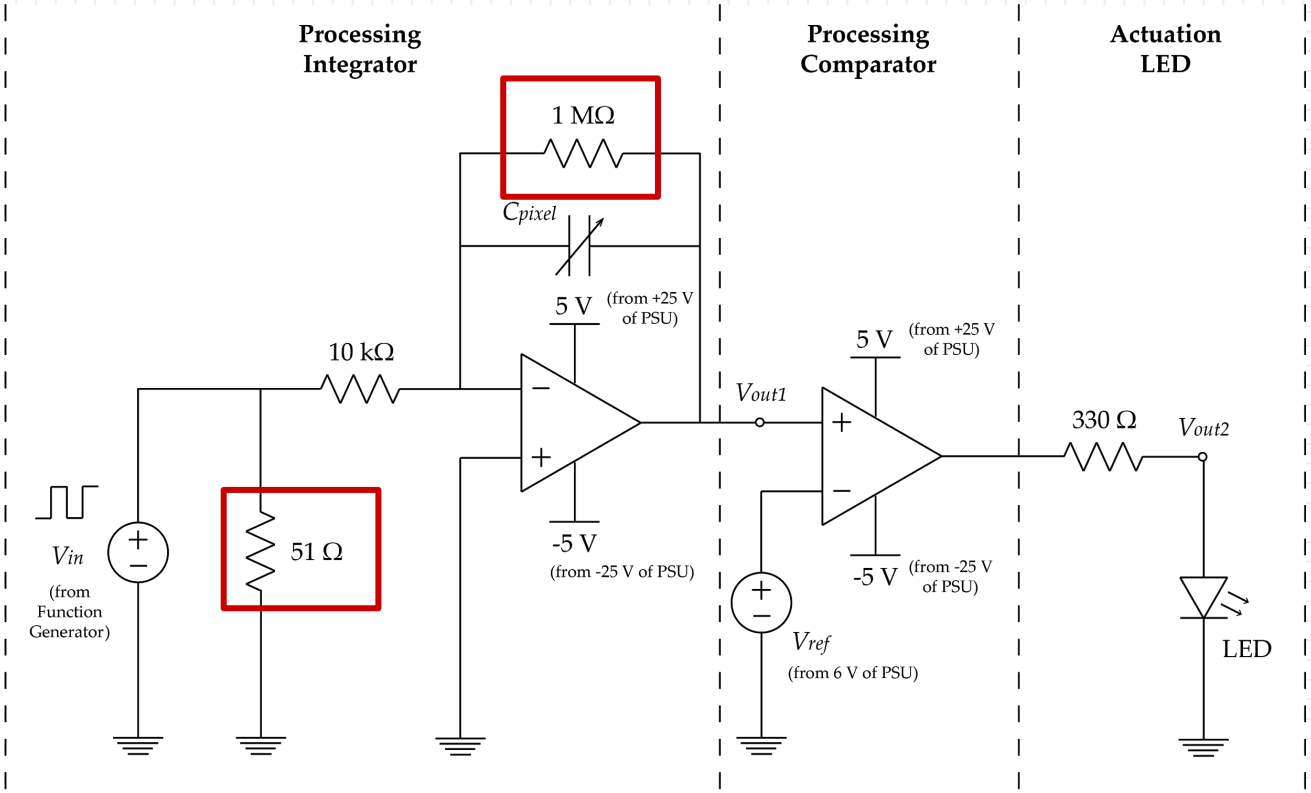

Our real-world circuit

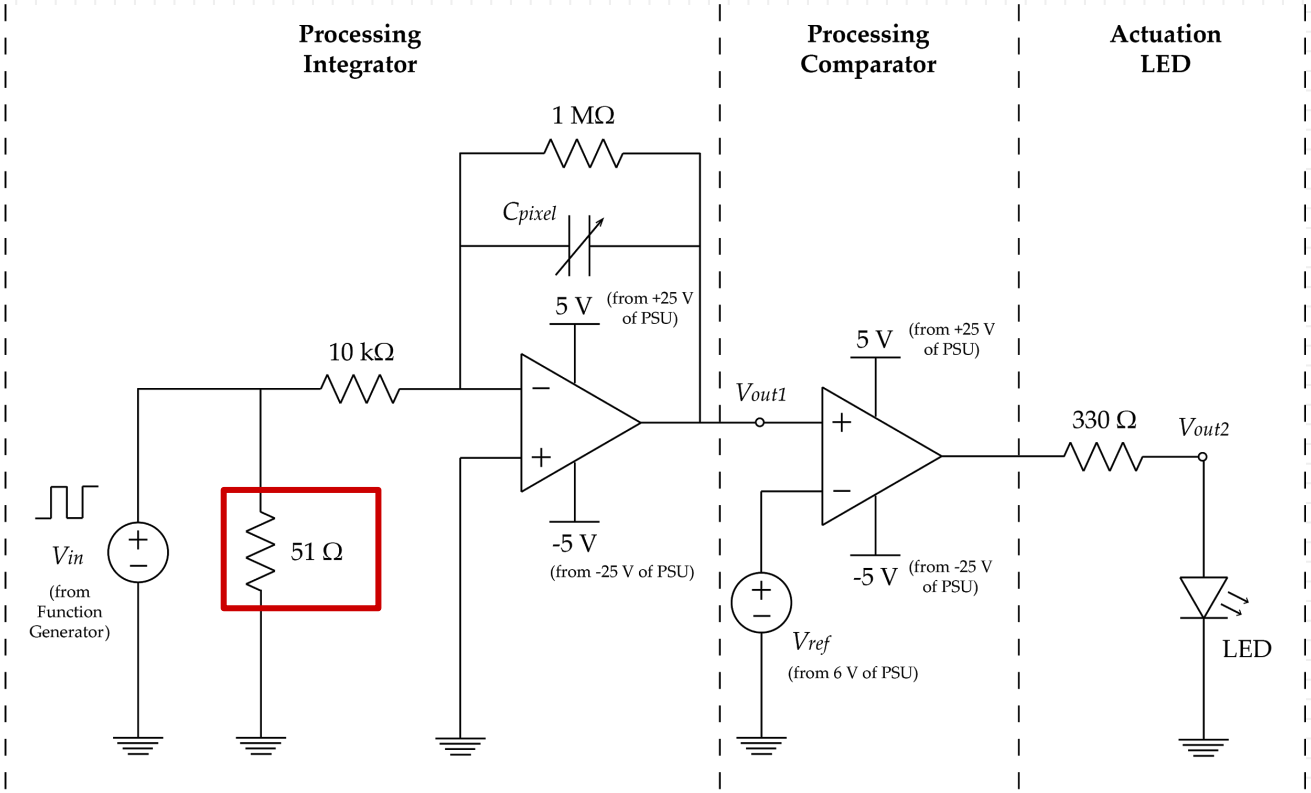

Note: Voltage dividers

- The function generator has a 50 Ohm source resistance
- Our function generator also assumes a 50 Ohm load is attached (just because).
  - **What's the voltage you get across this load?**

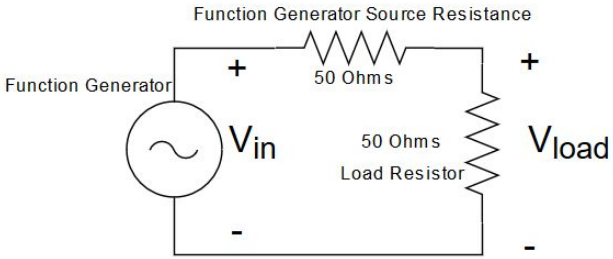

If you attach a 50 Ohm load, then the load only gets ½ of Vin applied

Note: Voltage dividers

- The function generator will automatically double its output voltage (Vin) so that the voltage across the load (Vload) is what you would expect after it is halved

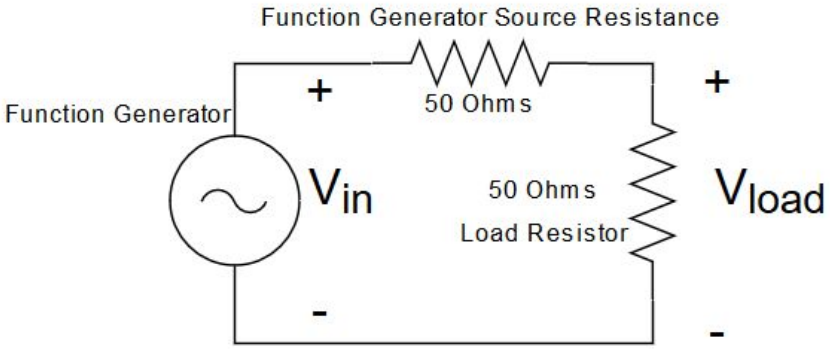

What does the 51 ohm do?

- Compute the thevenin resistance of our circuit from the input port
  - It's about 51 Ohms
- Our circuit (from the input) looks like a 51 Ohm resistor

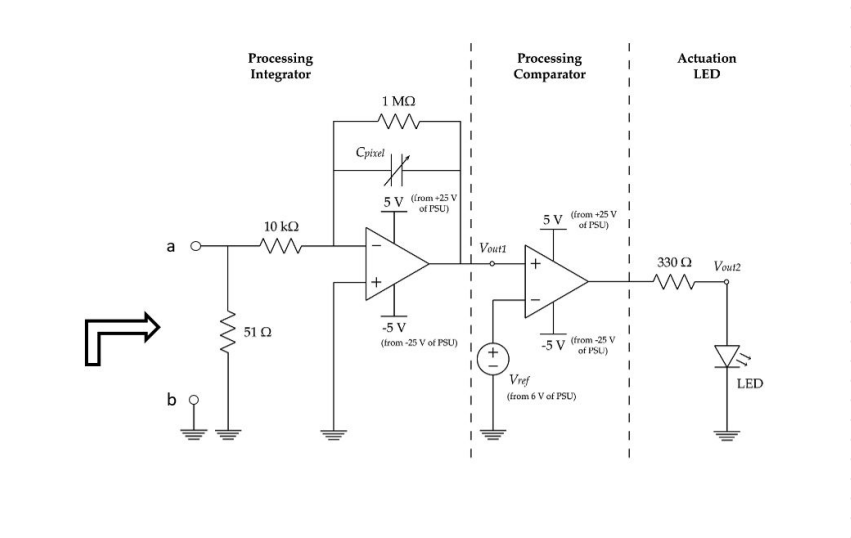

=

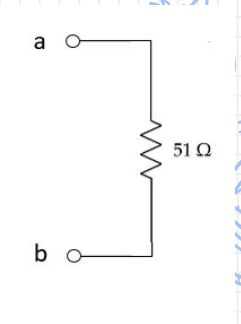

What does the 51 ohm do?

- Our circuit looks like a 51 ohm load with respect to the input, so the function generator is happy!
- (Note: 50 Ohm resistors basically don’t exist so we use 51 because it’s the next closest value)

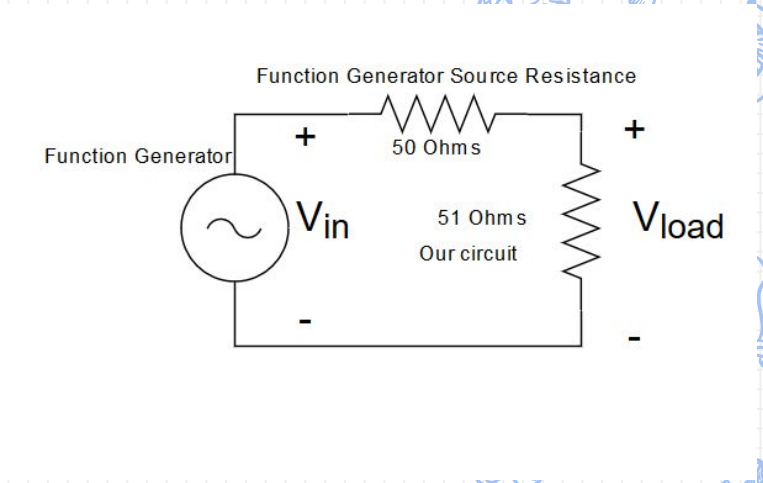

Our real-world circuit

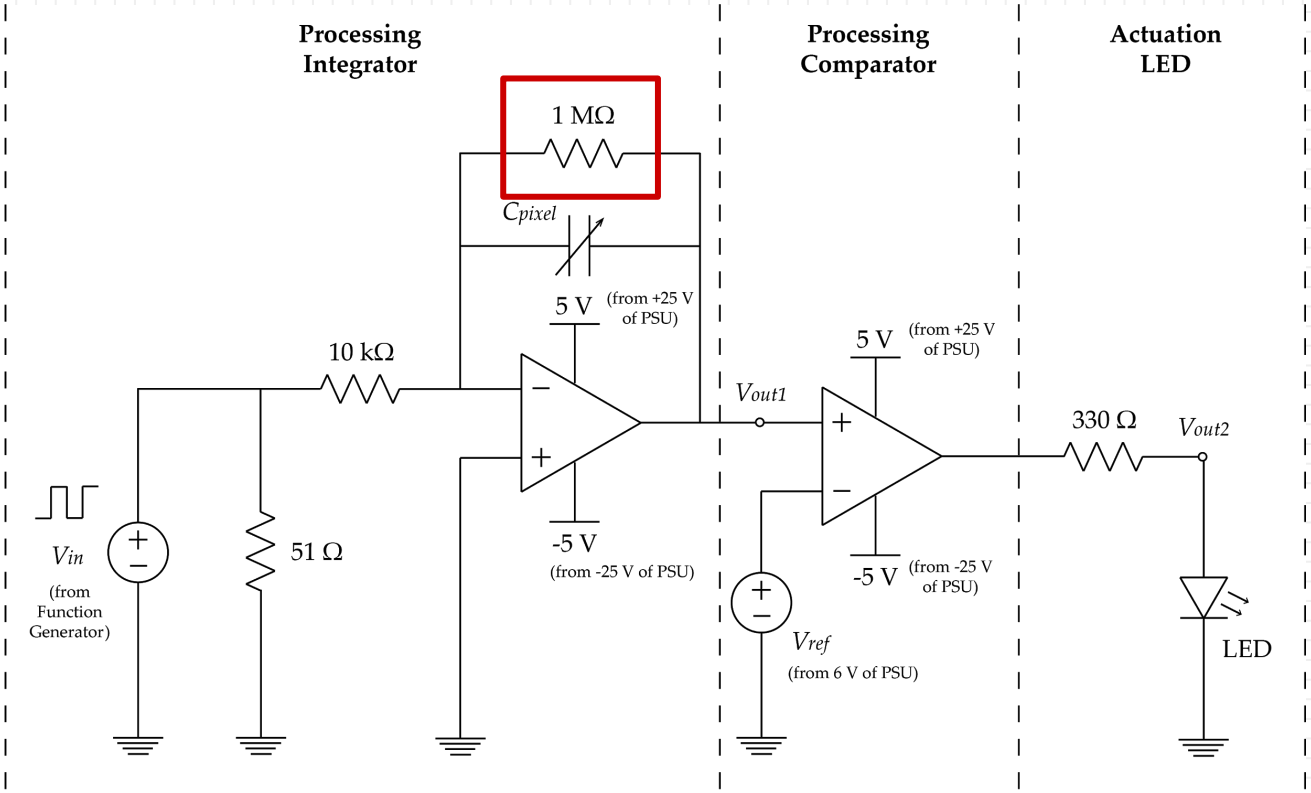

Another difference:

- It’s a little out of scope
- It ensures that the circuit is always in negative feedback
  - Since it’s 1 million Ohms it draws almost 0 current, and thus doesn’t really affect our analysis
- If it was not there, the Capacitor acts as an open during constant voltage, so there is no feedback

Taking the limit

- Okay, cool the LED turns on/off.
- But [insert friendly lab TA name here], didn’t you say capacitive touchscreen is way better than resistive? Why do we only have one touch point instead of nine?

Taking the limit

- Note that this isn't dependent on voltage dividers at all, only on if you are locally touching the capacitor
- **How to add more touch points?**
  - Duplicate the entire circuit and put them next to each other. Each one is a pixel
- They're independent, so the more you add the more points you can sense

Taking the limit

- Make the caps really small, put them in the size of a screen
- Thousands of these sensing circuits can be made incredibly small
  - (less than 4mm x 4mm)
- Put a thousand of these and you can recognize 1000 different touch points
- No moving parts, much better (and more accurate) than the resistive touchscreen

That's it!

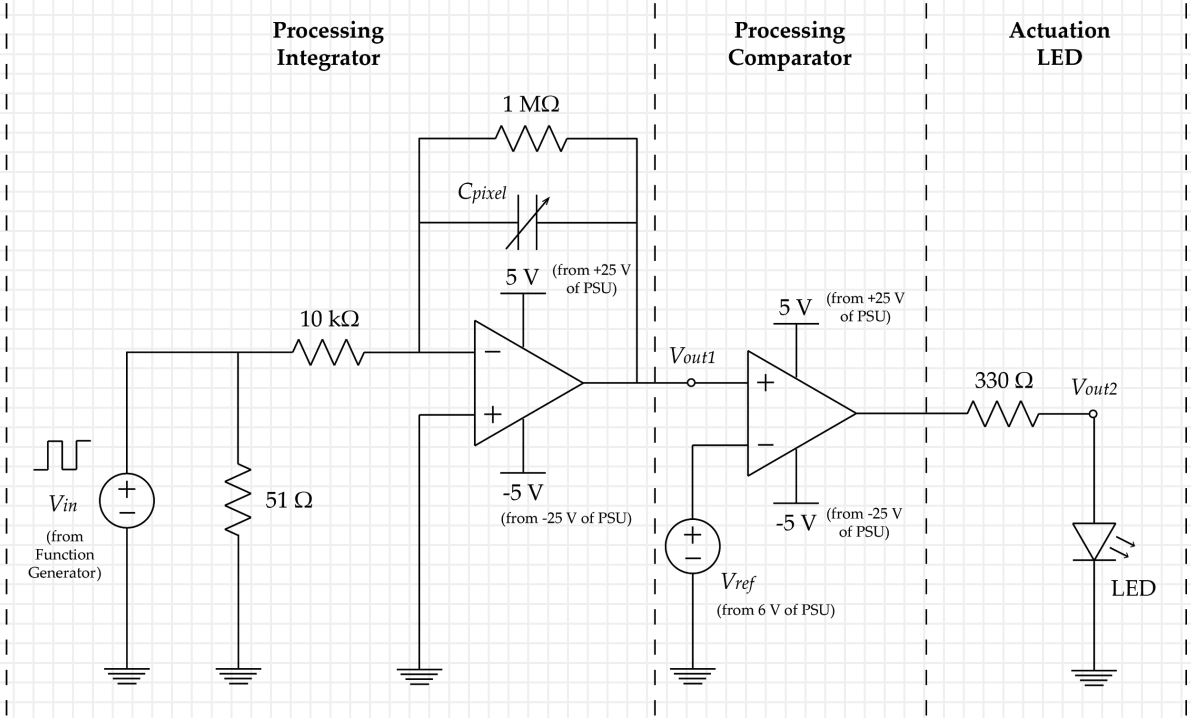
Processing Integrator
Processing Comparator
Actuation LED
1 MΩ
Cpixel
5 V
(from +25 V of PSU)
10 kΩ
Vout1
5 V
(from +25 V of PSU)
330 Ω
Vout2
Vin
(from Function Generator)
51 Ω
-5 V
(from -25 V of PSU)
-5 V
(from -25 V of PSU)
Vref
(from 6 V of PSU)
LED

Quick note

- Planar wiring **<u>required</u>**
- We can and will refuse to help you fix your circuit if it’s too messy
  - Use the breadboarding wires at the TA desk and the wire strippers at your stations
  - Cut wires and resistors to be as short as you can and have them still work.

Why do u gotta be so strict tho :(

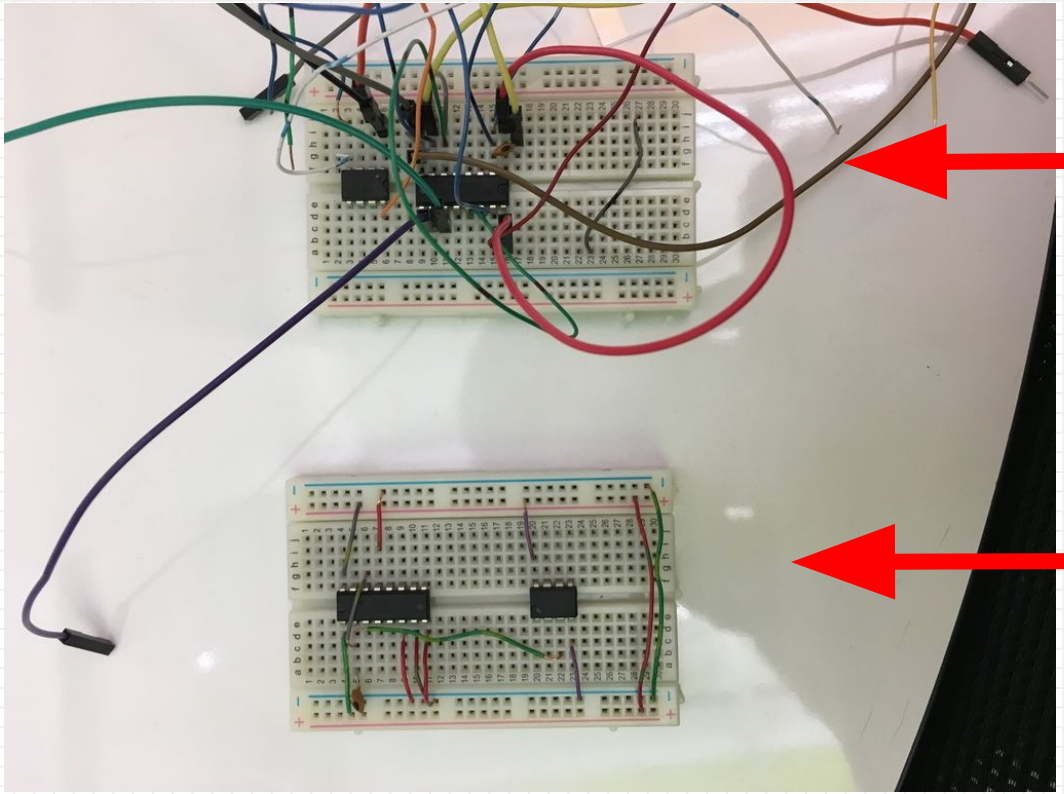

1.5 Hour to debug;
Falls apart easily

5 seconds to debug;
Practically 2D;
Lasts a lifetime

Keep your circuits neat!

- **Cut wires to correct lengths.**
- Place op amp across the middle of your breadboard (should already be there).
- If circuit is not neat, will not debug until it is.
- Get Started!

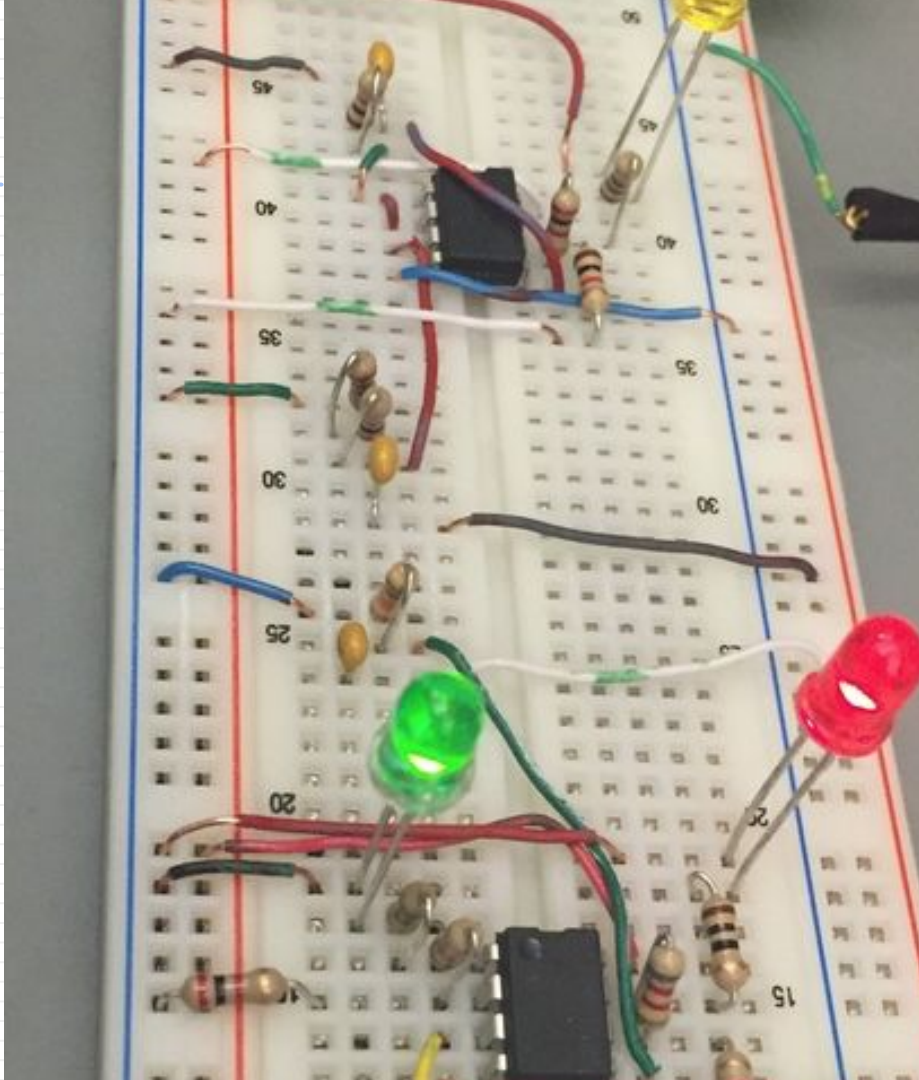

And that's it!

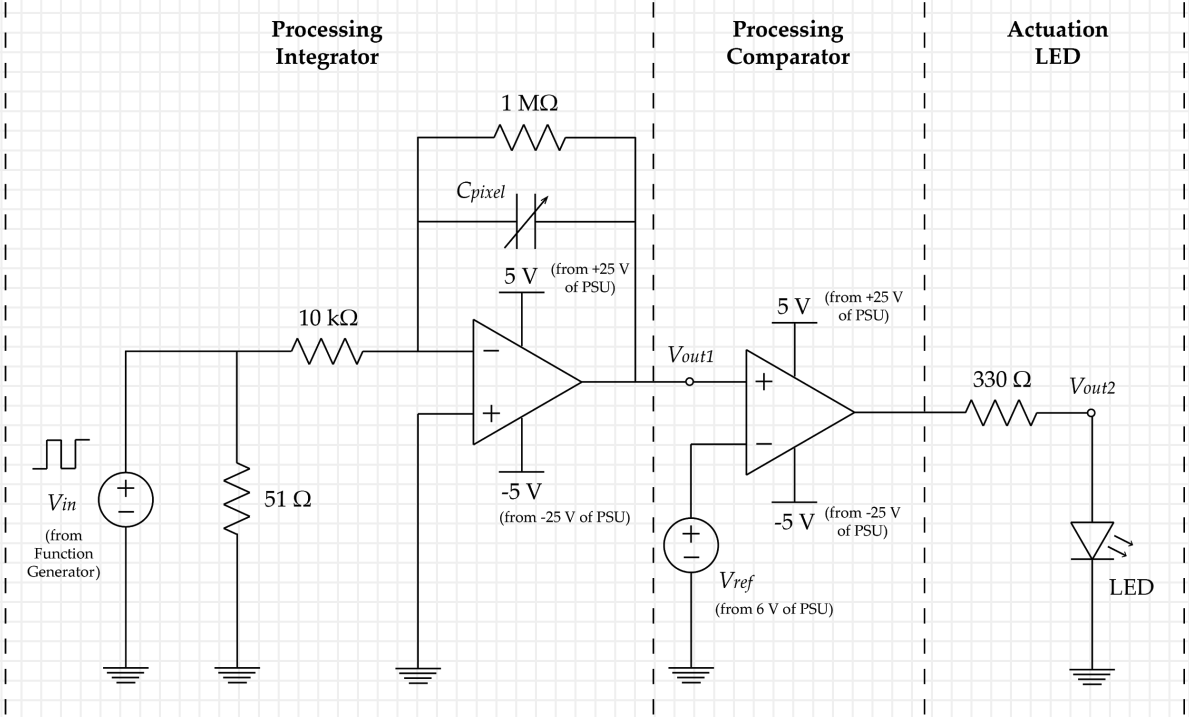

R	Band Colors
51 Ω	Gr Br Bl G
10 kΩ	Br Bl O G
1 MΩ	Br Bl Gr G
330 Ω	O O Br G