EECS 16A Designing Information Devices and Systems I
Spring 2017 Babak Ayazifar, Vladimir Stojanovic Discussion 8A

1. Capacitors and Charge Sharing

(a) Consider the circuit below with $C_1 = C_2 = 1\,\mu\text{F}$. Suppose C_1 is initially charged to $+1\,\text{V}$, and C_2 is charged to $+2\,\text{V}$. How much charge is on C_1 and C_2? How much energy is stored in each of the capacitors? What is the total stored energy?

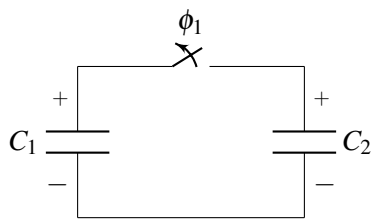

(b) Now the switch is closed (i.e. the capacitors are connected together.) What are the voltages across and the charges on C_1 and C_2? What is the total stored energy?

(c) Is thre more or less energy than before the switch was closed? Why?

2. Charge Sharing

In the circuit shown below, in phase 1 switches labeled ϕ_1 are on while switches labeled ϕ_2 are on in phase 2.

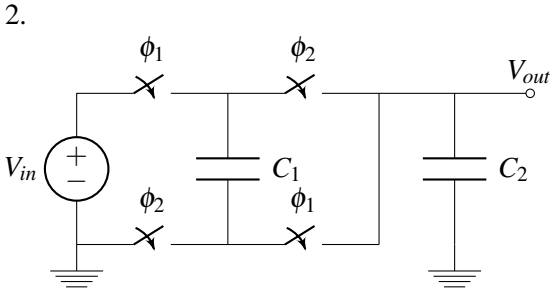

(a) Redraw the circuit in Phase 1. Label the voltages across each capacitor and find the charge on and voltage across each capacitor as a function of V_{in}, C_1, and C_2. Assume the capacitors are uncharged before Phase 1.

(b) Redraw the circuit in Phase 2. Label the voltages across each capacitor and find the charge on and voltage across each capacitor as a function of V_{out}, C_1, and C_2.

(c) Find V_{out} as a function of V_{in}, C_1, and C_2.

3. More Charge Sharing

Consider the following circuit:

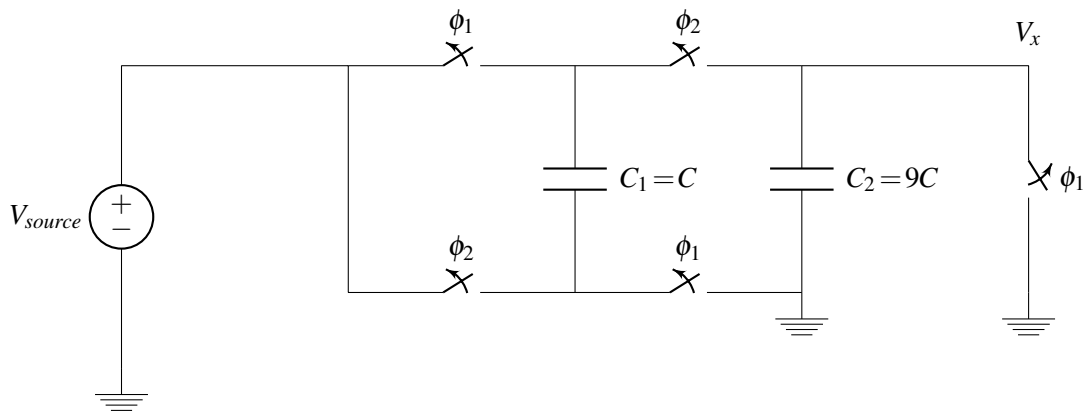

In the first phase, all of the switches labeled ϕ_1 will be closed and all switches labeled ϕ_2 will be open. In the second phase, all switches labeled ϕ_1 open and all switches labeled ϕ_2 close.

(a) Draw the polarity of the voltage (using $+$ and $-$ signs) across the two capacitors C_1 and C_2. (It doesn't matter which terminal you label $+$ or $-$; just remember to keep these consistent through phases 1 and 2!)

(b) Draw the circuit in the first phase and in the second phase. Keep your polarity from part (a) in mind.

(c) Find the voltages and charges on C_1 and C_2 in the first phase. Be sure to keep the polarities of the voltages the same!

(d) Now, in the second phase, find the voltage V_x.

(e) (BONUS) If capacitor C_2 did not exist (i.e., had a capacitance of 0 F), what would the voltage V_x be?