EE16A Lab 101
Monday 8-11

TA: Joy

LA: Ali, Andy, Chris

Announcements

- We will have lab every Monday from now on!
- Note that on May 1st (Monday of Dead Week)

  we will be doing our last lab

Capacitive Touchscreens

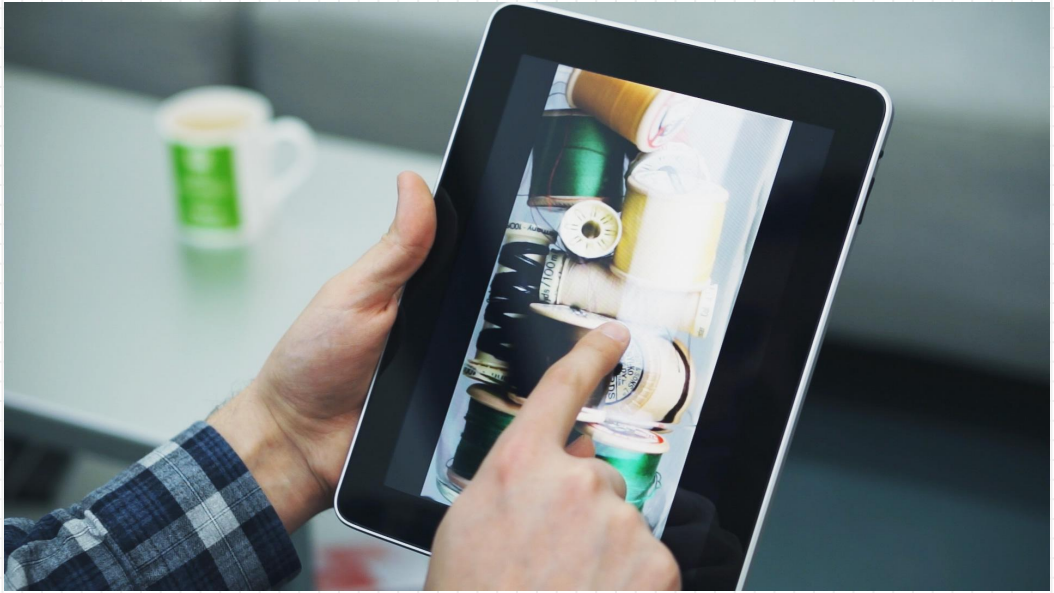

Goals: Touchscreen

- ✘ Understand charge-sharing circuit for a capacitive touchscreen
- ✘ Build one!

General Idea

Exploits the capacitive properties of the finger/body

- ✘ Can have multi-touch and be more sensitive
- ✘ Array of small capacitors used to detect touch, and capacitance changes with the touches
  - ✗ No electrical contact needed!

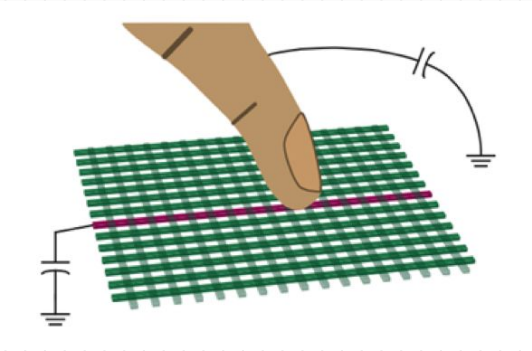

Capacitance and the touchpad

What is a capacitor and how does it work?

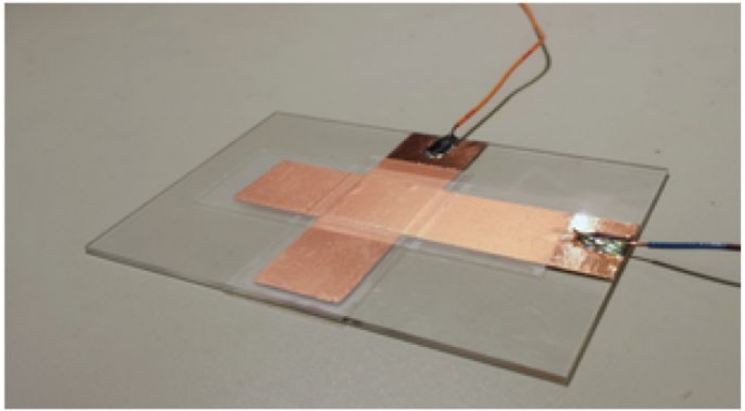

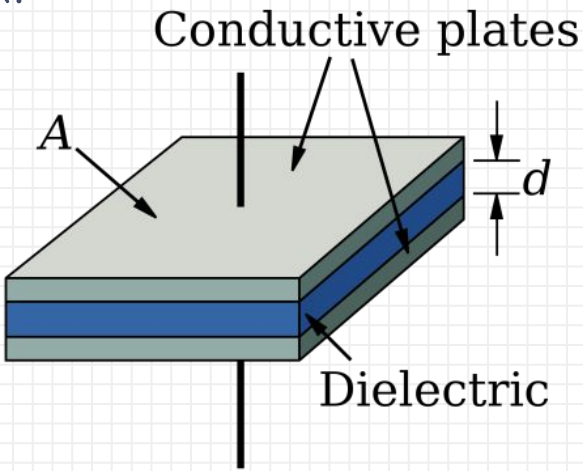

$$C = \epsilon_0 \frac{A}{d}$$

Charge Capacitor

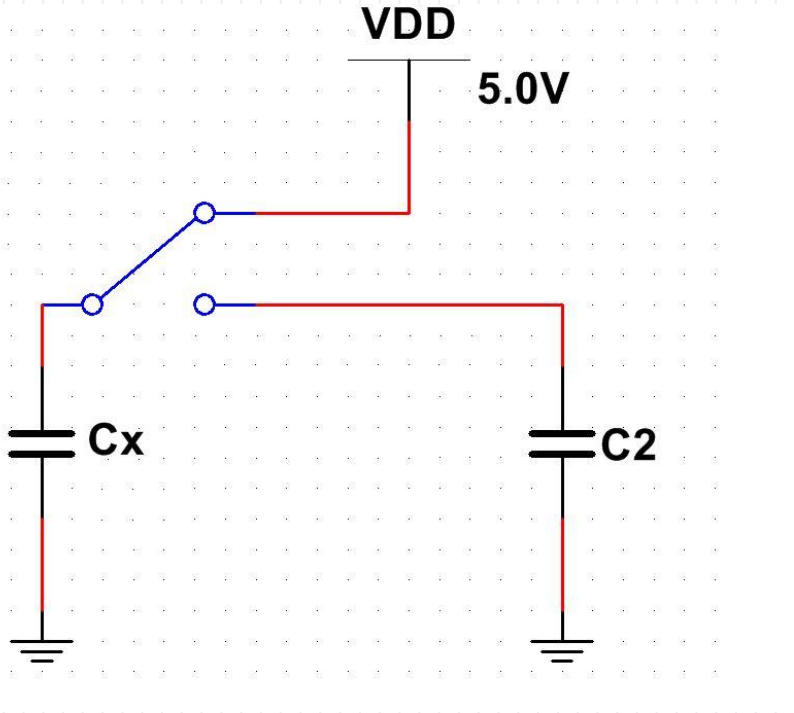

Share Charge

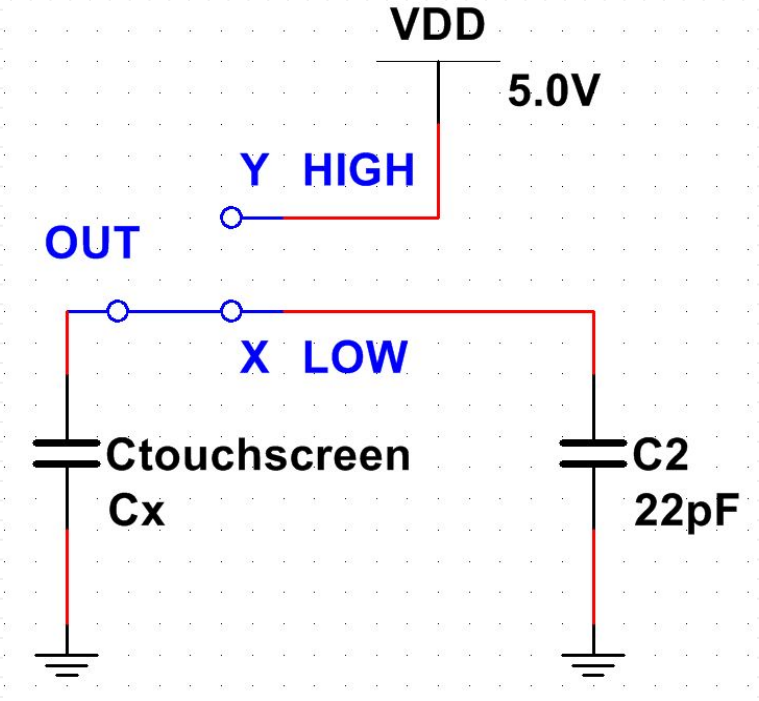

Charge-sharing

invariant:

$$Q = CV$$

- Q remains constant
- What happens to C?
- What about V?

What happens when a finger touches?

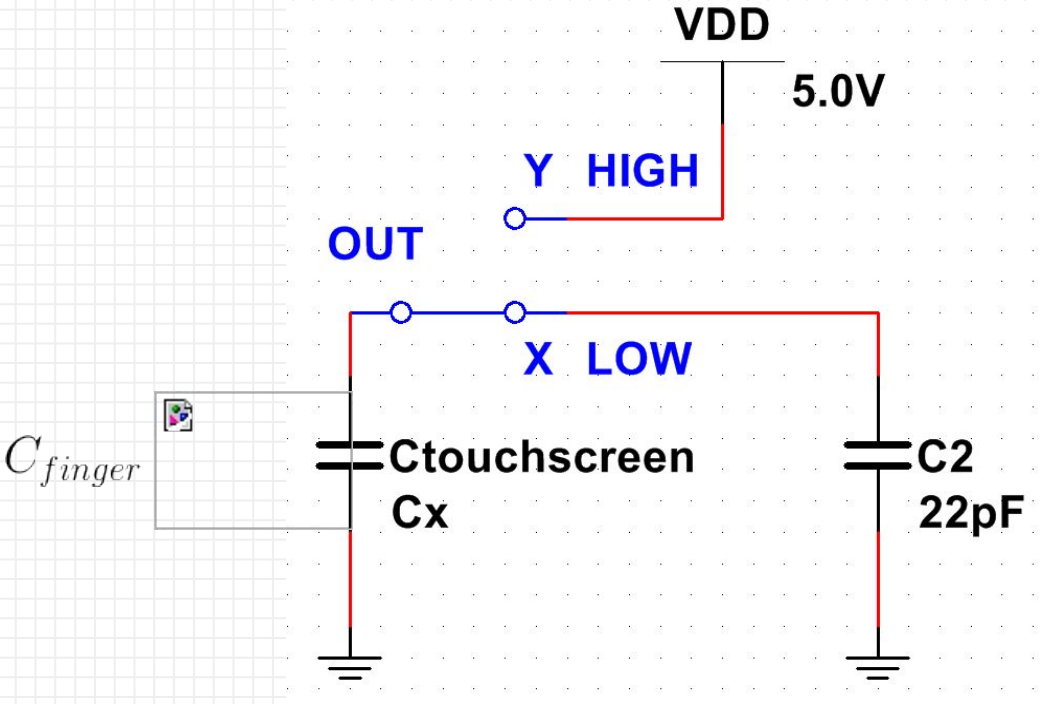

Charge-sharing

invariant:

$$Q = CV$$

What happens to C touchscreen?

What happens when a finger touches?

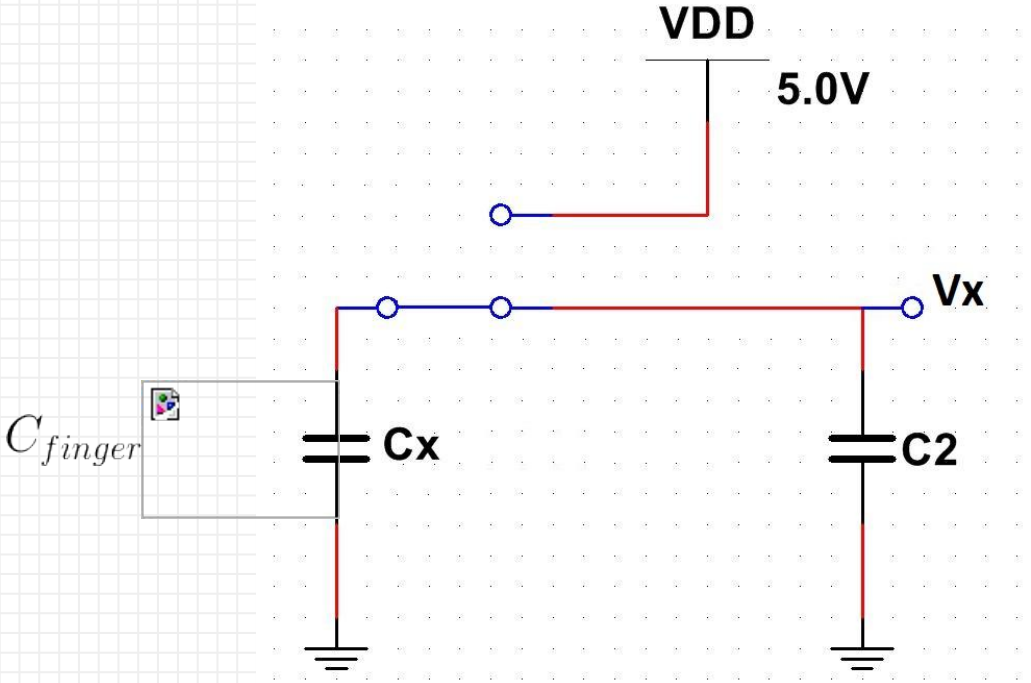

Charge-sharing invariant:

$$Q = CV$$

C_X may or may not include C_finger at a given time.

What happens to C touchscreen?

Comparator

- Compare input voltage at positive terminal to a reference voltage at negative terminal (think “>” symbol)
- Output V_dd if True, Ground if False
- Abstraction barrier for now! Don’t worry too much if you don’t understand how this will work

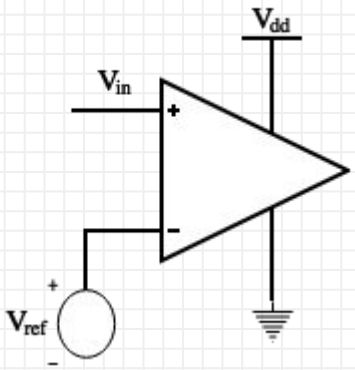

Full Detection Cycle

1. **Make sure both capacitors are discharged**

Connect the capacitors to ground to ensure capacitors are completely discharged

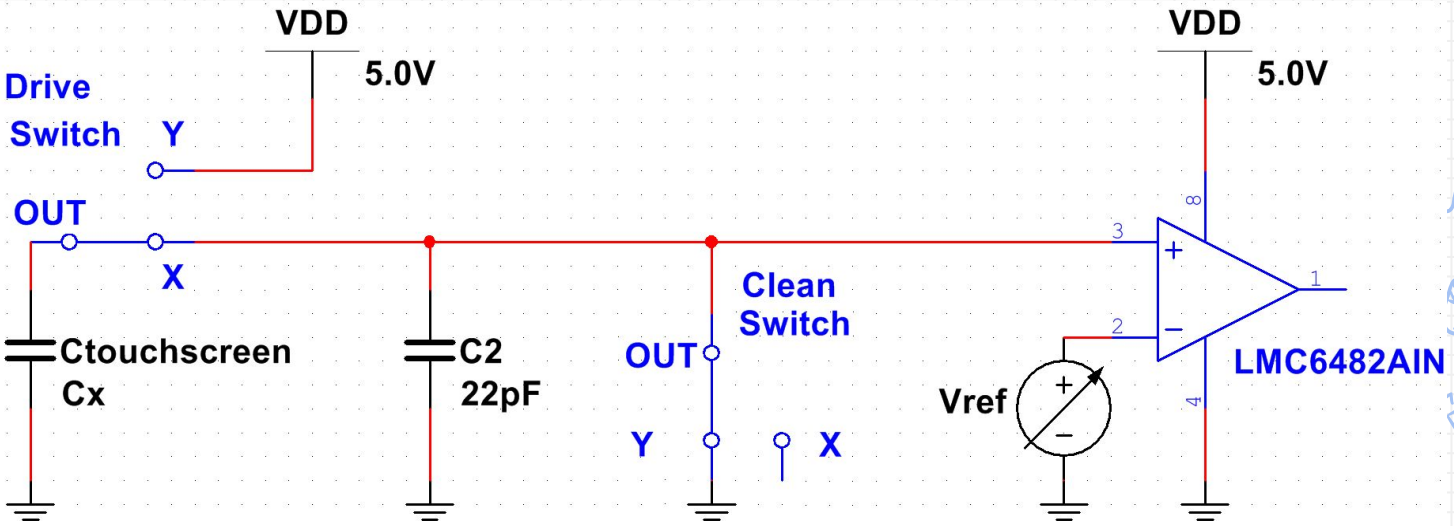

Full Detection Cycle

2. **Disconnect the short to ground in the clean switch**

Once discharged, for the circuit to store charge, remove the connection to ground.

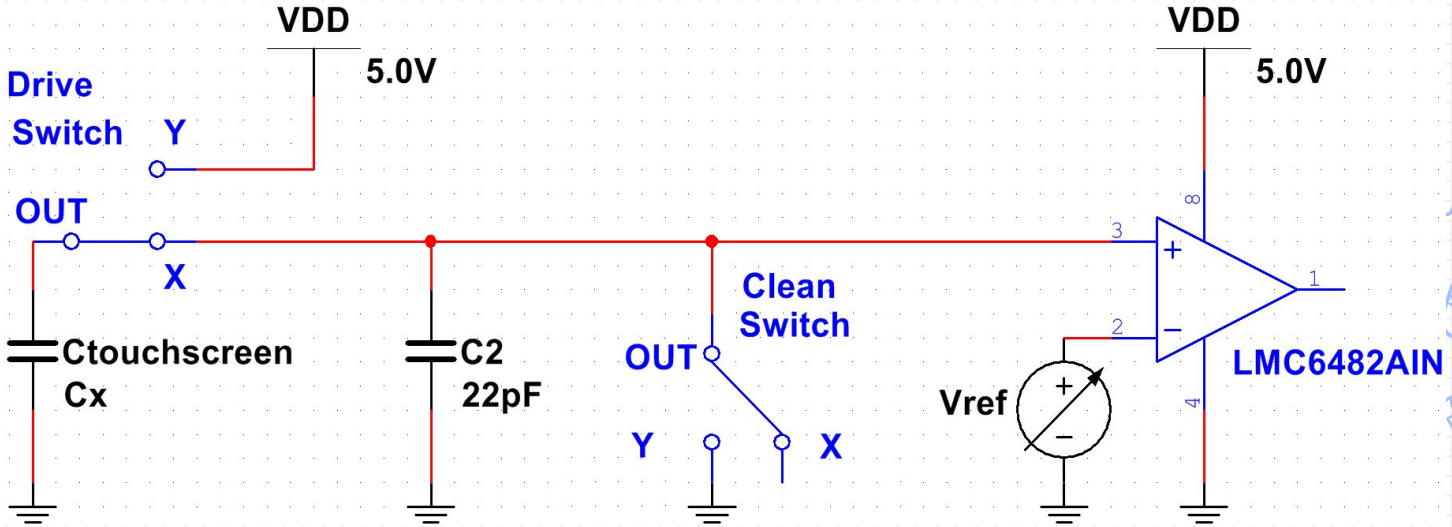

Full Detection Cycle

3. **Charge touchscreen capacitor to 5V**

Add the charge into the circuit to set up eventual charge sharing.

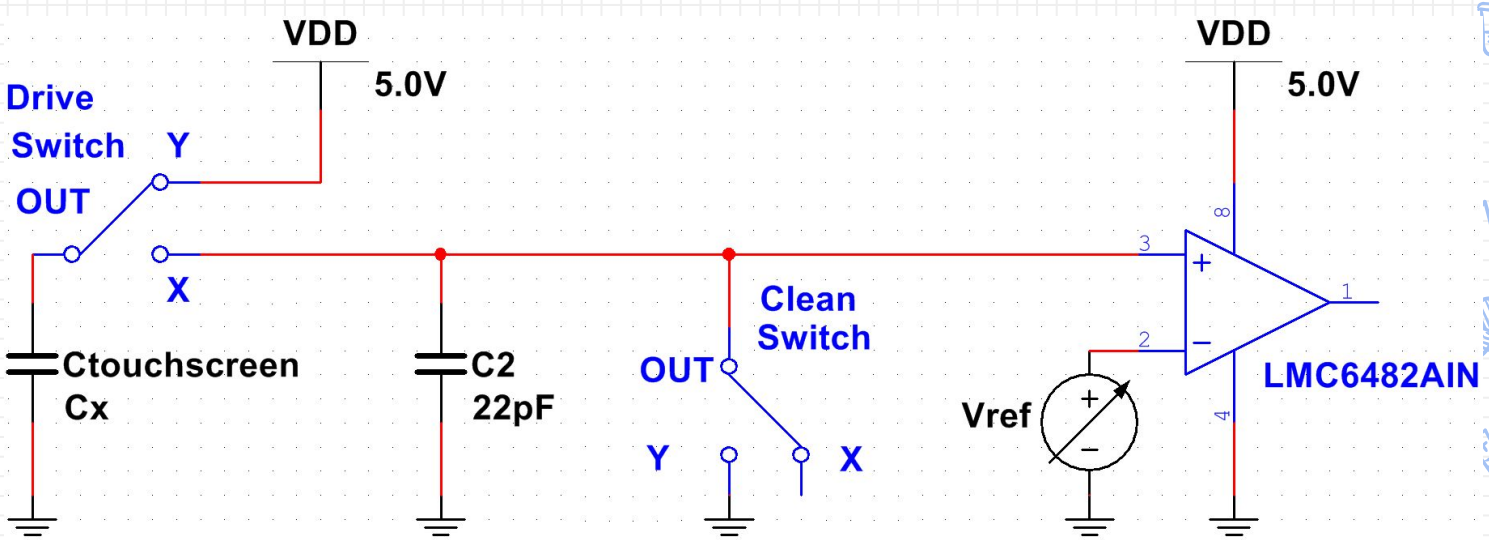

Full Detection Cycle

4. **Share charge between touchscreen capacitor and C2 (as described before)**

Measure voltage change to determine if screen touched.

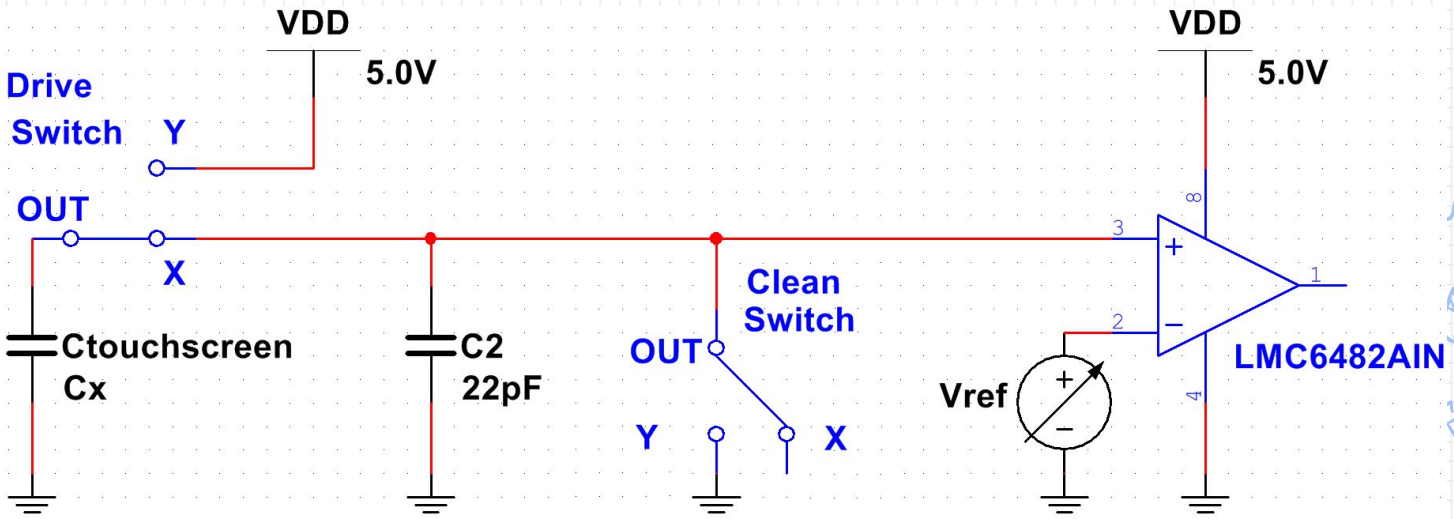

Full Detection Cycle

- Putting the past 2 things we learned together in 1 big circuit
- Clean switch serves as a reset button on the whole system (lets current go to ground, so we can start fresh)

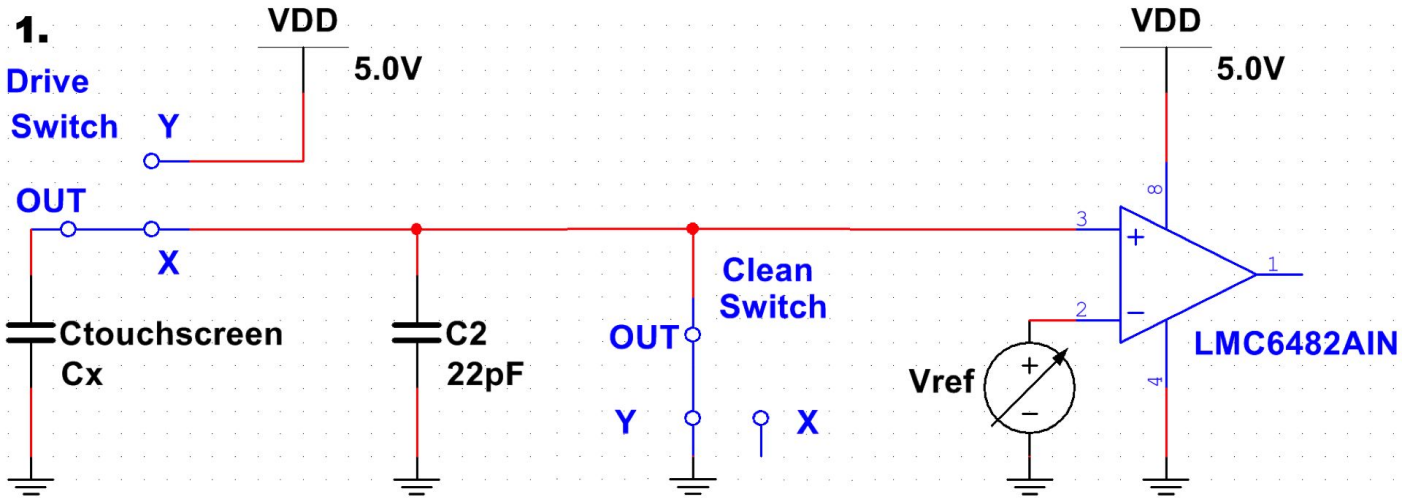

Questions + Checkoff

- PLEASE KEEP YOUR CIRCUITS CLEAN FOR DEBUGGING!! =)

- Question Form:
  - http://tinyurl.com/lab101-sp17-questions
- Responses:
  - http://tinyurl.com/lab101-sp17-queue

Check off at http://tinyurl.com/16a-lab-checkoff