EECS 16A Designing Information Devices and Systems I
Spring 2021 Discussion 6A

1. Label the circuit

In the circuit shown below, label all the nodes, and show one possible way of labeling all the element voltages and currents following the passive sign convention.

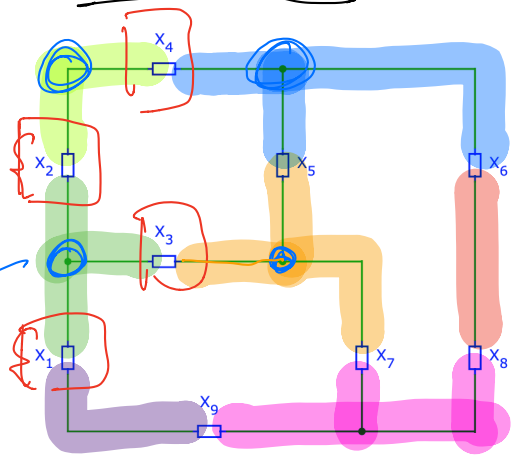

"Branches" "Circuit elements"

"Nodes"

~ one node = one voltage potential

PSC

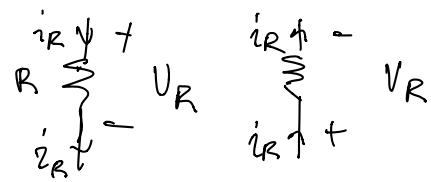

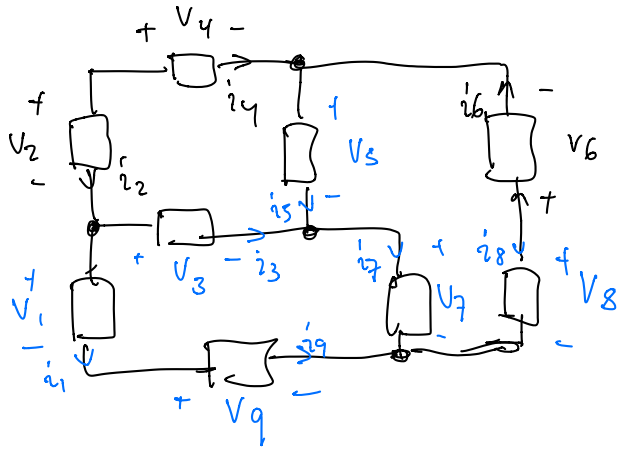

2. Solving Systems of Equations

skipped. see Soln.

Topics: system of equations, Gaussian elimination, number of solutions.

A system of linear equations can either have one solution, an infinite number of solutions, or no solution at all. Solve the following systems of equations by Gaussian elimination, and state the number of solutions.

(a) Write the following system of equations in augmented matrix form:

$$x + 3y = 4 \tag{1}$$
$$-2x - 5y = -6 \tag{2}$$

(b) Once in augmented matrix form we can use Gaussian Elimination to solve the system of equations. See what solution you get using Gaussian elimination.

(c) Solve the following system of equations:

$$x + 3y - z = 4 \tag{3}$$
$$4x - y + 2z = 8 \tag{4}$$
$$2x - 7y + 4z = -3 \tag{5}$$

(d) Solve the following system of equations:

$$x + 2y = 4 \tag{6}$$
$$2y = 2 \tag{7}$$
$$2x + 4y + z + w = 14 \tag{8}$$
$$z + w = 6 \tag{9}$$

3. Proof

Topics: proof, null space, invertibility.

Consider a square matrix **A**. Prove that if **A** has a non-trivial nullspace, i.e. if the nullspace of **A** contains more than just $\vec{0}$, then matrix **A** is not invertible.

if

then

some if

$$A\vec{x} = \vec{0} \quad \text{where } \vec{x} \neq \vec{0}$$

Row Persp.

$$\begin{bmatrix} \vec{a}_1^T\vec{x} \\ \vec{a}_2^T\vec{x} \\ \vdots \end{bmatrix}$$

Col. Persp.

$$x_1\vec{a}_1 + x_2\vec{a}_2 + \dots$$

L.C.

$$\alpha_1\vec{a}_1 + \alpha_2\vec{a}_2 + \dots = \vec{0}$$

A is not invertible

- A^{-1} does not exist
- $A\vec{x} = \vec{b}$ does not a unique soln.
- Cols A are LD
- Det A is zero

(1) $A\vec{x} = \vec{0}$

(2) $\vec{x} = \begin{bmatrix} x_1 \\ \vdots \\ x_n \end{bmatrix} \quad A = \begin{bmatrix} | & & | \\ \vec{a}_1 & \dots & \vec{a}_n \\ | & & | \end{bmatrix}$

then $x_1\vec{a}_1 + \dots + x_n\vec{a}_n = \vec{0}$ for some at least one nonzero $x_1 \dots x_n$

(3) implies $\vec{a}_1 \dots \vec{a}_n$ are LD.

(4) If cols of A are LD $\Rightarrow$ A is not invertible.

By contradiction

$$A\vec{x} = \vec{0} \qquad \vec{x} \neq \vec{0}$$

Assume A^{-1} exists.

$$\underbrace{A^{-1}A}_{I}\vec{x} = \underbrace{A^{-1}\vec{0}}_{\vec{0}}$$

$$\underbrace{I\vec{x}} = \vec{0}$$

$$\vec{x} = \vec{0}$$

Contradiction

$\Rightarrow A^{-1}$ cannot exist

$\Rightarrow A$ is not invertible.

4. StateRank Car Rentals

Topics: transition matrix, eigenvalue and eigenvector, matrix inversion, steady state.

You are an analyst at StateRank Car Rentals, which operates in California, Oregon, and Nevada. You are hired to analyze the number of rental cars going into and out of each of the three states (CA, OR, and NV).

The number of cars in each state on day $n \in \{0, 1, \ldots\}$ can be represented by the state vector $\vec{s}[n] = \begin{bmatrix} s_{\text{CA}}[n] \\ s_{\text{OR}}[n] \\ s_{\text{NV}}[n] \end{bmatrix}$.

The state vector follows the state evolution equation $\vec{s}[n+1] = \mathbf{A}\vec{s}[n], \forall n \in \{0, 1, \ldots\}$, where the transition matrix, $\mathbf{A}$, of this linear dynamic system is

$$\boxed{\mathbf{A} = \begin{bmatrix} \frac{7}{10} & \frac{1}{10} & \frac{1}{10} \\ \frac{1}{10} & \frac{6}{10} & \frac{1}{10} \\ \frac{2}{10} & \frac{3}{10} & \frac{8}{10} \end{bmatrix}}$$

(a) Use the designated boxes in Figure 1 to **fill in the weights for the daily travel dynamics of rental cars between the three states**, as described by the state transition matrix $\mathbf{A}$.

Note the order of the elements in the state vector $\vec{s}[n]$.

$$\vec{s}[n] = \begin{bmatrix} s_{CA}[n] \\ s_{OR}[n] \\ s_{NV}[n] \end{bmatrix} \quad A = \begin{bmatrix} 7/10 & 1/10 & 1/10 \\ 1/10 & 6/10 & 1/10 \\ 2/10 & 3/10 & 8/10 \end{bmatrix}$$

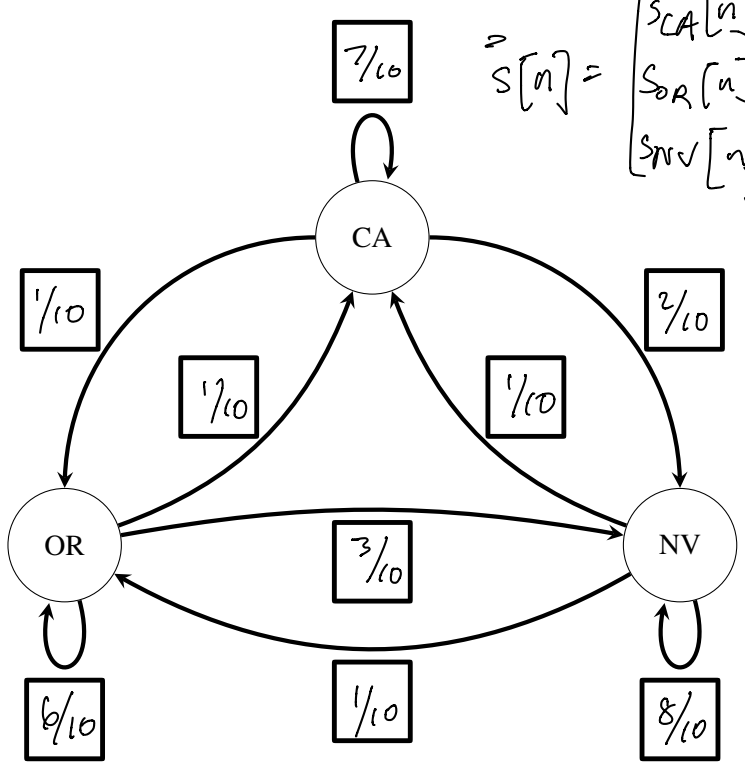

Figure 1: StateRank Rental Cars Daily Travel Dynamics.

$$A = \begin{bmatrix} 7/10 & 1/10 & 1/10 \\ 1/10 & 6/10 & 1/10 \\ 2/10 & 3/10 & 8/10 \end{bmatrix}$$

$$\vec{s}[n+1] = A\vec{s}[n]$$

(b) Suppose the state vector on day $n = 4$ is $\vec{s}[4] = \begin{bmatrix} 100 \\ 200 \\ 100 \end{bmatrix}$. **Calculate the state vector on day 5, $\vec{s}[5]$.**

$$\vec{s}[5] = A\vec{s}[4]$$

$$= \begin{bmatrix} 7/10 & 1/10 & 1/10 \\ 1/10 & 6/10 & 1/10 \\ 2/10 & 3/10 & 8/10 \end{bmatrix} \begin{bmatrix} 100 \\ 200 \\ 100 \end{bmatrix} = \begin{bmatrix} 100 \\ 140 \\ 160 \end{bmatrix}$$

(c) We want to express the number of cars in each state on day n as a function of the initial number of cars in each state on day 0. That is, we write $\vec{s}[n]$ in terms of $\vec{s}[0]$ as follows:

$$\vec{s}[n] = \mathbf{B}\vec{s}[0]$$

Express the matrix B in terms of A and n.

$$\vec{s}[n+1] = A\vec{s}[n] = A(A\vec{s}[n-1])$$

$$= A^2\vec{s}[n-1] = A^3\vec{s}[n-2] = A^4\vec{s}[n-3]$$

$$= A^{n+1}\vec{s}[0] = A^{n+1}\vec{s}[n-n]$$

$$\vec{s}[n] = A^n\vec{s}[0]$$

$$\boxed{B = A^n}$$

(d) We denote the eigenvalue/eigenvector pairs of the matrix **A** by

$$\left(\lambda_1 = 1, \vec{u}_1 = \begin{bmatrix} 50 \\ 40 \\ 110 \end{bmatrix}\right), \left(\lambda_2, \vec{u}_2 = \begin{bmatrix} 0 \\ -10 \\ 10 \end{bmatrix}\right), \text{ and } \left(\lambda_3, \vec{u}_3 = \begin{bmatrix} -10 \\ 0 \\ 10 \end{bmatrix}\right).$$

Find the eigenvalues λ_2 and λ_3 corresponding to the eigenvectors $\vec{u}_2$ and $\vec{u}_3$, respectively. Note that since $\lambda_1 = 1$ is given, you don't have to calculate it.

$$A = \begin{bmatrix} 7/10 & 1/10 & 1/10 \\ 1/10 & 6/10 & 1/10 \\ 2/10 & 3/10 & 8/10 \end{bmatrix}$$

$$\underline{\underline{A x_i}} = \underline{\underline{\lambda_i \vec{x}_i}}$$

λ_2 $\quad A u_2 = A \underbrace{\begin{bmatrix} 0 \\ -10 \\ 10 \end{bmatrix}}_{u_2} = \begin{bmatrix} 0 \\ -5 \\ 5 \end{bmatrix} = \lambda_2 u_2$

$$\Rightarrow \boxed{\lambda_2 = 1/2}$$

λ_3 $\quad A u_3 = A \underbrace{\begin{bmatrix} -10 \\ 0 \\ 10 \end{bmatrix}}_{u_3} = \begin{bmatrix} -6 \\ 0 \\ 6 \end{bmatrix} = \lambda_3 u_3$

$$\Rightarrow \boxed{\lambda_3 = 0.6}$$

Nontrivial nullspace $\Rightarrow$ 0 must be an eigenvalue

$$A\vec{x} = \vec{0} \quad \text{for nonzero } \vec{x}$$

$$= 0 \cdot \vec{x}$$

$$A\vec{x}_i = \lambda_i \cdot \vec{x}_i$$

If 0 is not an eigenvalue $\Rightarrow$ trivial nullspace

None of eigenvalues are zero $\Rightarrow$ trivial null space
$\Rightarrow$ A is invertible

(e) For the given dynamics in this problem, **does a matrix C exists such that $\vec{s}[n-1] = \mathbf{C}\vec{s}[n]$, for $n \in \{1,2,\ldots\}$? Justify your answer.**

$$\vec{s}[n] = A\vec{s}[n-1]$$

$C = A^{-1} \Rightarrow$ does A^{-1} exist

$\Rightarrow$ is A invertible

$$A = \begin{bmatrix} 7/10 & 1/10 & 1/10 \\ 1/10 & 6/10 & 1/10 \\ 2/10 & 3/10 & 8/10 \end{bmatrix} \rightarrow \text{how many pivots?} \quad \begin{bmatrix} 7 & 1 & 1 \\ 1 & 6 & 1 \\ 2 & 3 & 8 \end{bmatrix} \rightarrow \begin{bmatrix} 1 & 6 & 1 \\ 2 & 3 & 8 \\ 7 & 1 & 1 \end{bmatrix}$$

$$\rightarrow \begin{bmatrix} 1 & 6 & 1 \\ 0 & -9 & 6 \\ 0 & -41 & -6 \end{bmatrix}$$

$$\rightarrow \begin{bmatrix} 1 & 6 & 1 \\ 0 & -50 & 0 \\ 0 & -41 & -6 \end{bmatrix}$$

$$\rightarrow \begin{bmatrix} 1 & 6 & 1 \\ 0 & 1 & 0 \\ 0 & 0 & 1 \end{bmatrix}$$

3 pivots

$\Rightarrow$ is invertible

$\Rightarrow$ C exists

(f) Suppose that the initial number of rental cars in each state on day 0 is

$$\vec{s}[0] = \begin{bmatrix} 7000 \\ 5000 \\ 8000 \end{bmatrix} = 100\vec{u}_1 - 100\vec{u}_2 - 200\vec{u}_3,$$

where $\vec{u}_1, \vec{u}_2$ and $\vec{u}_3$ are the eigenvectors from part (d).
After a very large number of days n, how many rental cars will there be in each state?
That is, i) calculate

$$\vec{s}^* = \lim_{n\to\infty} \vec{s}[n]$$

and ii) show that the system will indeed converge to $\vec{s}^*$ as $n \to \infty$ if it starts from $\vec{s}[0]$
Hint: If you didn't solve part (d), the eigenvalues satisfy $\lambda_1 = 1, |\lambda_2| < 1$ and $|\lambda_3| < 1$.

$$\vec{s}[n] = A^n s[0]$$

$$= A^n \cdot 100\vec{u}_1 + A^n(-100)\vec{u}_2 + A^n(-200)\vec{u}_3$$

$$\vec{s}[n] = 100 \cdot \lambda_1^n u_1 + (-100)\lambda_2^n \vec{u}_2 + (-200)\lambda_3^n u_3$$

$$\lim_{n\to\infty} \vec{s}[n] = 100u_1 + 0 + 0$$

$$= 100u_1 = 100\begin{bmatrix} 50 \\ 40 \\ 100 \end{bmatrix} = \begin{bmatrix} 5000 \\ 4000 \\ 10000 \end{bmatrix}$$

5. True or False? See Soln.

Topics: invertibility, span, vector space, basis, linear dependence.

(a) There exists an invertible $n \times n$ matrix A for which $A^2 = 0$.

(b) If A is an invertible $n \times n$ matrix, then for all vectors $\vec{b} \in \mathbb{R}^n$, the system $A\vec{x} = \vec{b}$ has a unique solution.

(c) If A and B are invertible $n \times n$ matrices, then the product AB is invertible.

(d) The two vectors $v_1 = \begin{bmatrix} 1 \\ 1 \\ 0 \end{bmatrix}$ and $v_2 = \begin{bmatrix} 1 \\ -1 \\ 0 \end{bmatrix}$ form a basis for the subspace span$\{ \begin{bmatrix} 1 \\ 0 \\ 0 \end{bmatrix}, \begin{bmatrix} 0 \\ 1 \\ 0 \end{bmatrix} \}$.

(e) The dimension of the subspace span$\{ \begin{bmatrix} 1 \\ 0 \\ 0 \end{bmatrix}, \begin{bmatrix} 0 \\ 1 \\ 0 \end{bmatrix} \}$ is 3.

(f) A set of n linearly dependent vectors in $\mathbb{R}^n$ can span $\mathbb{R}^n$.