EECS 16A Designing Information Devices and Systems I
Summer 2022 Final

Final Solution

This exam has a total of 74 points.

1. **HONOR CODE (1 point)**
Please copy the following statements into the box provided for the honor code on your answer sheet, **and sign your name**.

As a member of the UC Berkeley community, I act with honesty, integrity, and respect for others.

2. **What was the favorite thing you did this summer? (1 point)** *All answers will be awarded full credit.*

3. Trilateral Woes (5 points)

Jimmy is using trilateration to find treasure, which is located at (1, 7). He decides to set up 2 beacons, A and B at the points (-2, 3) and (4, 3) respectively. The circles represent where the beacons intersect with the treasure location.

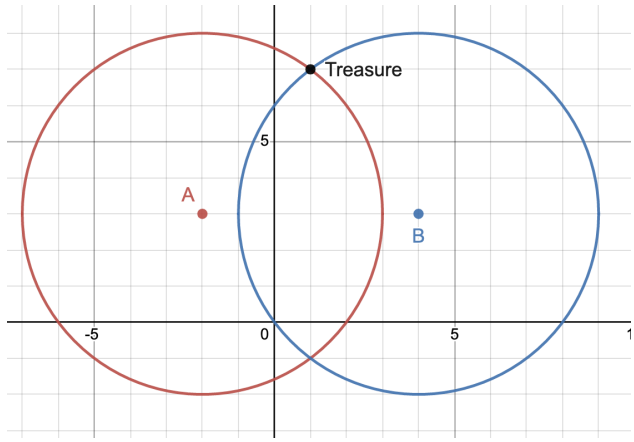

(a) (2 points) What is the distance from the treasure to beacon A and beacon B respectively?

Solution: We just can use Pythagoras Theorem to find the distance from A to the treasure, which is just $\sqrt{(1-+2)^2+(7-3)^2} = 5$ Similarly, we get the distance of 5 from beacon B as well, either the above formula or by inspection.

(b) (2 points) Choose a point to place a beacon that is not on A or B such that trilateration fails. By failing, it means that trilateration does not find a unique point. Explain why it fails.

Solution: We want to choose a beacon that is the same distance between the two intersected points already. We know one of the points is (1, 7). Although not given, you can see that the other point from the diagram(or through algebra) that the point is (1, -1). So we can choose the midpoint between these two points and find that it is (1, 3). In fact, any point on the linear y = 3 will lead to failure.

(c) (1 points) Choose a point to place a beacon that is not on the treasure such that trilateration succeeds.

Solution: From part b, if we choose any point that is not on the line y = 3, then trilateration will succeed. For our example, we will choose (2, 7).

4. A Peculiar Archeological Discovery (6 points) An ancient relic from an ancient civilization has been recently discovered and you are tasked with the job of decrypting its meaning. The symbols inscribed on the relic is a $\mathbb{R}^{2\times 2}$ matrix. However, due to wear and tear, two of the numbers on the matrix are undecipherable. The matrix appears as such:

$$\mathbf{M} = \begin{bmatrix} 17 & a \\ -1 & b \end{bmatrix}$$

(a) (3 points) Using carbon dating you figured out that the relic was created in the year 913AD. Recognizing the mathematical prowess of the ancient civilization, you deduced that the eigenvalues of the matrix must correspond to its year of creation $(\lambda_1 = 9, \lambda_2 = 13)$. Given this information, find the values for a and b in the matrix above.

Solution: To figure out the missing values, we can utilize the same process for finding eigenvalues but instead of having λ as the unknown, we have the two missing values of the matrix as unknowns.

$$det(M - \lambda I) = 0$$

For algebraic purposes, let us set the unknown values of the matrix as x and y:

$$det(\begin{bmatrix} 17-9 & x \\ -1 & y-9 \end{bmatrix}) = 0 \qquad det(\begin{bmatrix} 17-13 & x \\ -1 & y-13 \end{bmatrix}) = 0$$

Now, using the equation for solving for determinants, we get the following system of equations:

$$-4(y-9) + x = 0$$

$$-8(y-13) + x = 0$$

And solving for the unknowns, we get $x = 32$ and $y = 5$, meaning that the solved matrix will be as follows:

$$\mathbf{M} = \begin{bmatrix} 17 & 32 \\ -1 & 5 \end{bmatrix}$$

(b) (3 points) After making this breakthrough, your colleague discovers that the correct matrix is actually

$$\mathbf{M}_n = \begin{bmatrix} -1 & -6 \\ 3 & 8 \end{bmatrix}$$

with eigenvalues $\lambda_1 = 2, \lambda_2 = 5$. He suggests that you calculate the eigenvectors of this matrix to find any correlations with the civilization's sudden disappearance. Find the eigenvectors of $\mathbf{M}_n$.

Solution: To solve for the eigenvector of a matrix, we need to find the nullspace of $M_n - \lambda x$ using the following equation:

$$(M_n - \lambda I)\vec{x} = \vec{0}$$

Plugging in the two eigenvalues, we get the following equations:

$$\begin{bmatrix} -3 & -6 \\ 3 & 6 \end{bmatrix} \vec{x_1} = \vec{0} \qquad \begin{bmatrix} -6 & -6 \\ 3 & 3 \end{bmatrix} \vec{x_2} = \vec{0}$$

Using these equations, we can solve for the two eigenvectors:

$$\vec{x_1} = \begin{bmatrix} -2 \\ 1 \end{bmatrix} \qquad \vec{x_2} = \begin{bmatrix} 1 \\ -1 \end{bmatrix}$$

5. Too Much Pressure (6 points)

Right now, our capacitive touchscreen can successfully determine the presence of touch. However, we want to give it a bit more power so that it can also detect the pressure (how hard the touch is). The figure below shows we can do that by sensing the area of the touch, which increases with force. **Assume, for all subparts of this problem that the area of both the top and bottom metal plates are bigger than the touch area. For all times, exactly half of the finger is above the top plate, and half is above the bottom plate.**

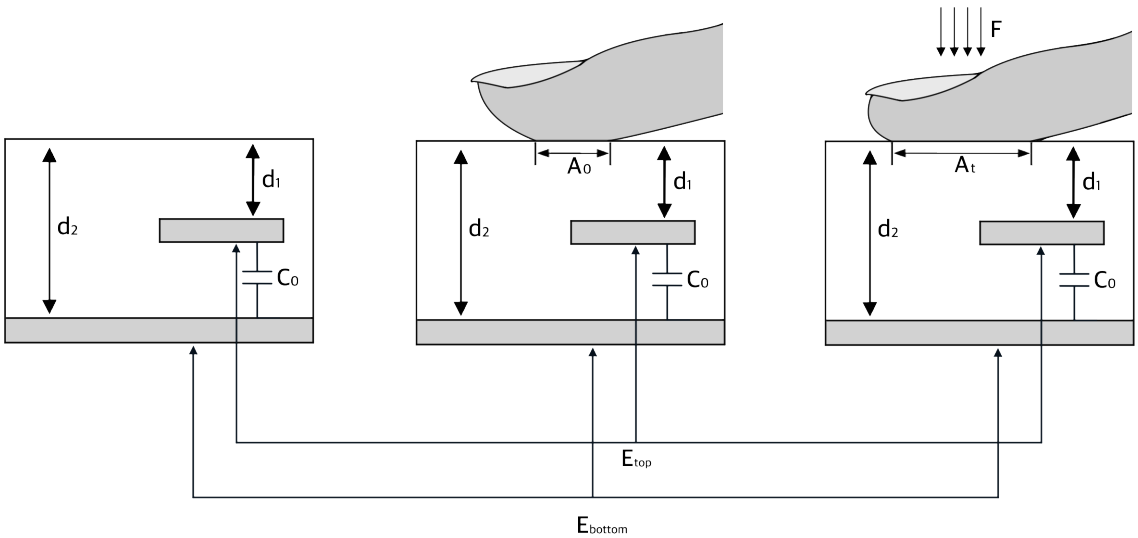

Figure 5.1: Capacitive Touch With Pressure

(a) (3 points) The area of touch is directly proportional to the force applied, and can be modeled with a linear function $A_t = kF_a + A_0$, where F_a is the force applied and A_0 is the area of touch when no force is present. Given that the capacitance between the two metal plates is C_0, find the total equivalent capacitance (all 3 capacitors) between the two metal plates when a touch with force F_a is applied in terms of $C_0, A_0, k, F_a, d_1, d_2$, and ε.

Solution: In both cases, the presence of touch forms two new capacitors, both with area $\frac{A_t}{2}$. And we can calculate the capacitance of the two capacitors with the formula $C = \frac{\varepsilon A}{d}$. Thus we have $C_1 = \frac{\varepsilon A_t}{2d_1}$, and $C_2 = \frac{\varepsilon A_t}{2d_2}$. These two capacitors are in series so their equivalent capacitance is $C_{1,2} = (\frac{1}{C_1} + \frac{1}{C_2})^{-1} = \frac{\varepsilon A_t}{2(d_1+d_2)}$. The capacitor between the plates, C_0, is in parallel with $C_{1,2}$ so the total equivalent capacitance betweent the plates is $C_{\text{eq}} = \frac{\varepsilon A_t}{2(d_1+d_2)} + C_0$. Plug in $A_t = kF_a + A_0$ to get $C_{\text{eq}} = \frac{\varepsilon k F_a + A_0}{2(d_1+d_2)} + C_0$

(b) (3 points) Consider the following circuit that we use to measure capacitance:

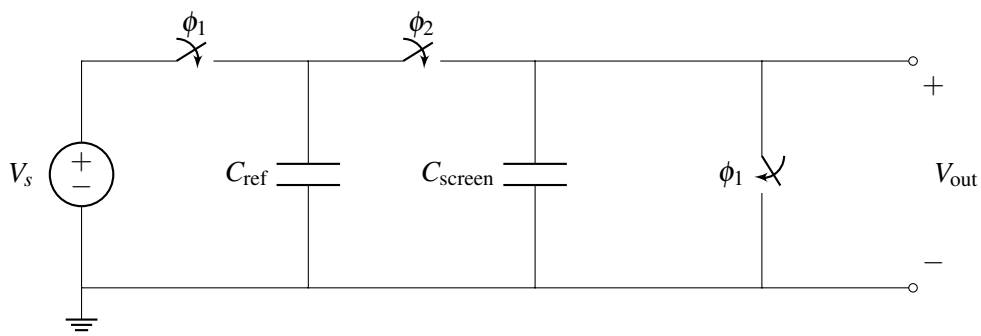

Regardless of your answers in part (b), assume that the capcitance of the touchscreen $C_{screen} = (2F_a + 1)nF$, where F_a is the force applied. The circuit cycles through two phases. In phase 1, switches labeled ϕ_1 are closed and switches labeled ϕ_2 are open; in phase 2, switches labeled ϕ_1 are open and switches labeled ϕ_2 are closed. After running through a full cycle, the circuit is able to reach steady state in phase 2, V_{out} is measured to be = 2V. Find the force of touch given $V_s = 5V$ and $C_{\text{ref}} = 2nF$.

Solution: In phase 1, the total charge on the floating node is $Q = CV = 2nF \times 5V = 10nC$. In phase 2, since the total charge is conserved and $Q_{\text{ref}} + Q_{\text{screen}} = Q_{\text{total}}$, plug in the numbers of $V_{\text{out}}, C_{\text{ref}}$ to get $2nF \times 2V + C_{\text{screen}} \times 2V = 10nC$, solve to get $C_{\text{screen}} = 3nF$. Plug into the equation given to get $C_{\text{screen}} = (2F + 1)nF = 3nF$, solve to get F = 1N.

6. What do you mean? (5 points)

After learning about correlation, Alice and Bob decide to send each other messages encrypted with correlation. They pre-decided upon a reference vector, $\vec{x} = \begin{bmatrix} 1 \\ -2 \\ 3 \end{bmatrix}$, and encrypt any message they send to each other, $\vec{m}$, by taking its correlation with the reference vector at four different shifts: $\begin{bmatrix} Corr_{\vec{x}}(\vec{m})[-1] \\ Corr_{\vec{x}}(\vec{m})[0] \\ Corr_{\vec{x}}(\vec{m})[1] \\ Corr_{\vec{x}}(\vec{m})[2] \end{bmatrix}$.

For example, when sending the message $\vec{m} = \begin{bmatrix} 2 \\ 3 \end{bmatrix}$, Alice finds:

$$Corr_{\vec{x}}(\vec{m})[-1] = \begin{bmatrix} 1 \\ -2 \\ 3 \end{bmatrix} \cdot \begin{bmatrix} 3 \\ 0 \\ 0 \end{bmatrix} = 3$$

$$Corr_{\vec{x}}(\vec{m})[0] = \begin{bmatrix} 1 \\ -2 \\ 3 \end{bmatrix} \cdot \begin{bmatrix} 2 \\ 3 \\ 0 \end{bmatrix} = -4$$

$$Corr_{\vec{x}}(\vec{m})[1] = \begin{bmatrix} 1 \\ -2 \\ 3 \end{bmatrix} \cdot \begin{bmatrix} 0 \\ 2 \\ 3 \end{bmatrix} = 5$$

$$Corr_{\vec{x}}(\vec{m})[2] = \begin{bmatrix} 1 \\ -2 \\ 3 \end{bmatrix} \cdot \begin{bmatrix} 0 \\ 0 \\ 2 \end{bmatrix} = 6$$

and stack them into a single column vector: $\vec{m}^* = \begin{bmatrix} 3 \\ -4 \\ 5 \\ 6 \end{bmatrix}$ to finish encryption

(a) (2 points) What is the length of the longest message vector that Alice and Bob can encrypt and still recover the original message? Explain.

Solution: Correlation calculations can be reformulated as linear equations, and each entry corresponds to one equation. Since the encrypted vector is in $\mathbb{R}^4$, we have 4 linear equations and thus a maximum of 4 unknowns. However, we still want to verify that this system of linear equations with 4

unknowns has a unique solution, and we can do that by rewriting the system in matrix-vector form:

$$Corr_{\vec{x}}(\vec{m})[-1] = \begin{bmatrix} 1 \\ -2 \\ 3 \end{bmatrix} \cdot \begin{bmatrix} b \\ c \\ d \end{bmatrix} = b - 2c + 3d$$

$$Corr_{\vec{x}}(\vec{m})[0] = \begin{bmatrix} 1 \\ -2 \\ 3 \end{bmatrix} \cdot \begin{bmatrix} a \\ b \\ c \end{bmatrix} = a - 2b + 3c$$

$$Corr_{\vec{x}}(\vec{m})[1] = \begin{bmatrix} 1 \\ -2 \\ 3 \end{bmatrix} \cdot \begin{bmatrix} 0 \\ a \\ b \end{bmatrix} = -2a + 3b$$

$$Corr_{\vec{x}}(\vec{m})[2] = \begin{bmatrix} 1 \\ -2 \\ 3 \end{bmatrix} \cdot \begin{bmatrix} 0 \\ 0 \\ a \end{bmatrix} = 3a$$

Rewriting gives us:

$$\begin{bmatrix} 0 & 1 & -2 & 3 \\ 1 & -2 & 3 & 0 \\ -2 & 3 & 0 & 0 \\ 3 & 0 & 0 & 0 \end{bmatrix} \begin{bmatrix} a \\ b \\ c \\ d \end{bmatrix} = \begin{bmatrix} Corr_{\vec{x}}(\vec{m})[-1] \\ Corr_{\vec{x}}(\vec{m})[0] \\ Corr_{\vec{x}}(\vec{m})[1] \\ Corr_{\vec{x}}(\vec{m})[2] \end{bmatrix}$$

Notice that the matrix that Alice and Bob use to encrypt their messages has linearly independent columns, which means that the system will always have a unique solution.

(b) (3 points) Alice sends Bob a message vector $\vec{m}$ of length 3 by using the above encryption scheme and Bob received $\vec{y} = \begin{bmatrix} 8 \\ -14 \\ 16 \\ 3 \end{bmatrix}$, what is the original message $\vec{m}$?

Solution: Performing Gaussian Elimination on the system

$$\begin{bmatrix} 0 & 1 & -2 \\ 1 & -2 & 3 \\ -2 & 3 & 0 \\ 3 & 0 & 0 \end{bmatrix} \begin{bmatrix} a \\ b \\ c \end{bmatrix} = \begin{bmatrix} 8 \\ -14 \\ 16 \\ 3 \end{bmatrix}$$

gives us $\vec{m} = \begin{bmatrix} 1 \\ 6 \\ -1 \end{bmatrix}$

7. Sum-ething is up... (6 points)

Consider the following circuit:

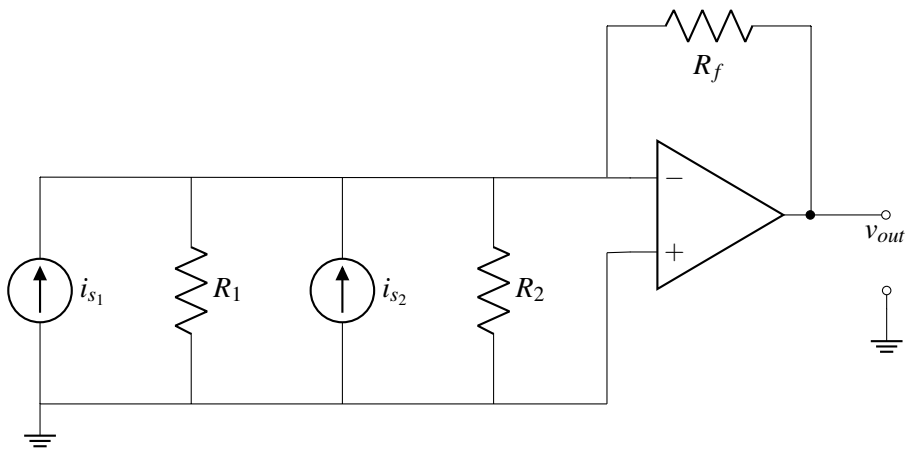

(a) (3 points) Find an expression for v_{out} in terms of $i_{s_1}, i_{s_2}, R_1, R_2$, and R_f .

Solution: There are many different ways to solve for v_{out}. One way is to use the following steps: First, combine the two current sources into one source and the two resistors into one resistor:

$$i_{s_1} + i_{s_2} = i_s$$

$$R_1 \parallel R_2 = R_s$$

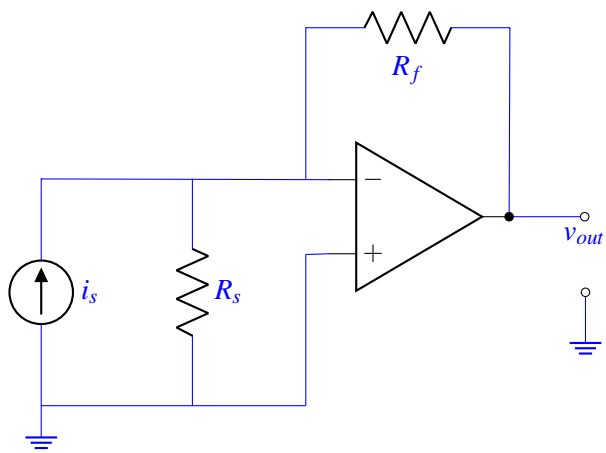

Then, we can actually replace the current source + resistor sub-circuit with it's thevenin equivalent (where the resistor value is the same and the voltage source value is:

$$v_s = i_s \times R_s$$

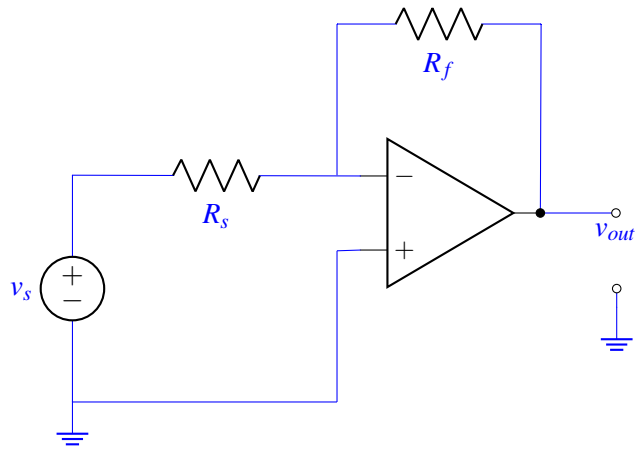

We can now recognize this circuit as an inverting amplifier and plug in our values to get v_{out}

$$v_{out} = -\frac{R_f}{R_s} \times v_s$$
$$= -R_f \times i_s$$
$$= -R_f \times (i_{s_1} + i_{s_2})$$

(b) (3 points) When trying to reproduce this circuit, you realize you don't have all the same components! You have at your disposition:

- Two voltage sources v_1 and v_2 (with voltage values dependent on the values of the elements from part a)
- The same resistors R_1, R_2 and R_f.
- One op-amp

Design an equivalent circuit using the above-mentioned materials. What are the values of v_1 and v_2 in terms of i_{s_1}, i_{s_2}, R_1, and R_2?

Solution: The trick here is similar to that which we used in the last part. We can replace each current source + resistor subcircuit with it's Thevenin equivalent. Because these subcircuits are already in Norton form, we just place a voltage source with value $i_{s_i} \times R_i$ in series with the resistor R_i:

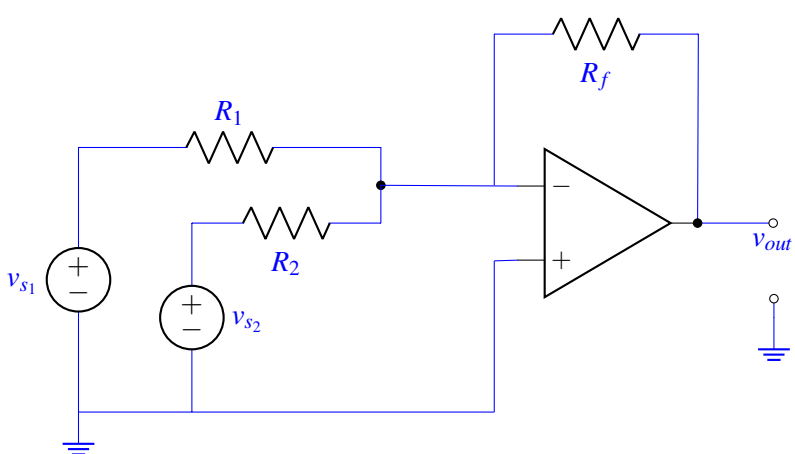

This is called a summing amplifier, can you identify why?

8. Transformations: Matrices in Disguise (8 points)

(a) (4 points) The projection onto a fixed vector is a linear transformation, so it can be represented by a matrix. For a given vector $\vec{v} = \begin{bmatrix} a \\ b \end{bmatrix}$, find the matrix B, in terms of a and b, such that: $proj_{\vec{v}}(\vec{x}) = B\vec{x}$.

Solution: To find the B matrix, we want to find what the standard basis vectors tranform into under this transformation:

For $\vec{x} = \begin{bmatrix} 1 \\ 0 \end{bmatrix} \implies proj_{\vec{v}}(\vec{x}) = \frac{<\vec{x},\vec{v}>}{||v||^2}\vec{v} = \frac{1 \cdot a + 0 \cdot b}{a^2+b^2}\begin{bmatrix} a \\ b \end{bmatrix} = \frac{a}{a^2+b^2}\begin{bmatrix} a \\ b \end{bmatrix} = \frac{1}{a^2+b^2}\begin{bmatrix} a^2 \\ ab \end{bmatrix}$

For $\vec{x} = \begin{bmatrix} 0 \\ 1 \end{bmatrix} \implies proj_{\vec{v}}(\vec{x}) = \frac{<\vec{x},\vec{v}>}{||v||^2}\vec{v} = \frac{0 \cdot a + 1 \cdot b}{a^2+b^2}\begin{bmatrix} a \\ b \end{bmatrix} = \frac{b}{a^2+b^2}\begin{bmatrix} a \\ b \end{bmatrix} = \frac{1}{a^2+b^2}\begin{bmatrix} ab \\ b^2 \end{bmatrix}$

$B = \frac{1}{a^2+b^2}\begin{bmatrix} a^2 & ab \\ ab & b^2 \end{bmatrix}$

For the following parts, consider the matrix:

$$R = \begin{bmatrix} cos\theta & -sin\theta & 0 \\ sin\theta & cos\theta & 0 \\ 0 & 0 & 1 \end{bmatrix}$$

(b) (2 points) What does this transformation represent geometrically? (*Hint: think about what happens to the standard basis vectors*)

Solution: $R\begin{bmatrix} 1 \\ 0 \\ 0 \end{bmatrix} = \begin{bmatrix} cos\theta \\ sin\theta \\ 0 \end{bmatrix}$ $\quad R\begin{bmatrix} 0 \\ 1 \\ 0 \end{bmatrix} = \begin{bmatrix} -sin\theta \\ cos\theta \\ 0 \end{bmatrix}$ $\quad R\begin{bmatrix} 0 \\ 0 \\ 1 \end{bmatrix} = \begin{bmatrix} 0 \\ 0 \\ 1 \end{bmatrix}$

This is a rotation matrix in 3D, where the axis of rotation is the z-axis and the angle of rotation is θ degrees counterclockwise.

(c) (2 points) Given that $0° < \theta < 360°$, find **one** eigenvalue for the above matrix **and** the corresponding eigenvector.

Solution: Based on the previous part, we can see that this matrix leaves any vector on the z-axis unaffected, which means any vector along the z-axis will be an eigenvector with the corresponding eigenvalue being 1. $\vec{v} = \begin{bmatrix} 0 \\ 0 \\ 1 \end{bmatrix}, \quad \lambda = 1$

9. May the Charge be With You (4 points)

For the circuit below, assume that the ϕ_1 switches are initially closed and the ϕ_2 switches are initially open. **Calculate V_{out} after the ϕ_1 switches are open and ϕ_2 switches are closed**. Each phase is long enough that the circuit reaches steady-state. Assume that C_1 = 2 μF and C_2 = 3 μF.

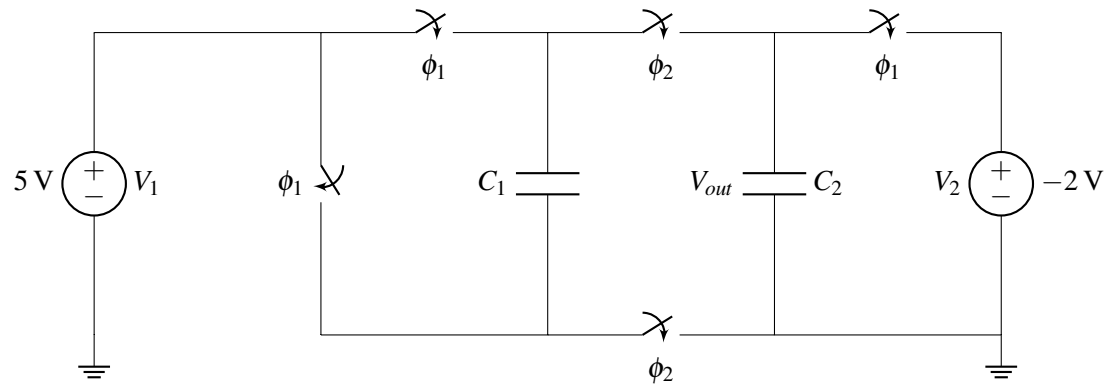

Solution: During phase 1, the circuit looks like this:

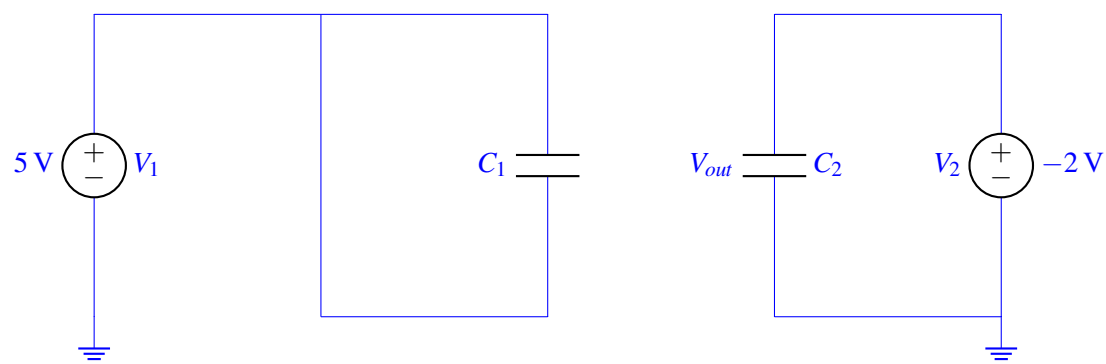

Since C_1 is shorted, then :

$$V_{C_1,1} = 0V,$$

$$Q_{C_1,1} = 0C.$$

For C_2, we have :

$$V_{C_2,1} = -2V$$

$$Q_{C_2,1} = C_2 \times V_{C_2,1} = 3\mu F \times -2V = -6\mu C$$

Then, in phase 1 we have:

$$Q_{tot,1} = Q_{C_1,1} + Q_{C_2,1} = -6\mu C$$

In phase 2, we get:

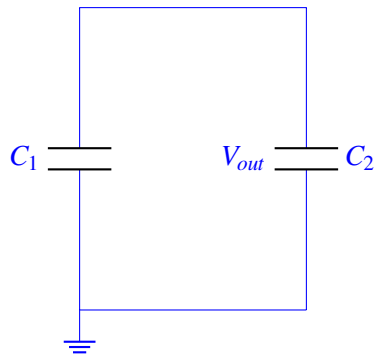

We realize that:

$$V_{C_1,2} = V_{C_2,2} = V_{out}$$

Then,

$$Q_{C_1,2} = C_1 \times V_{out} = 2 \times 10^{-6} V_{out}$$
$$Q_{C_2,2} = C_2 \times V_{out} = 3 \times 10^{-6} V_{out}$$
$$Q_{tot,2} = Q_{C_1,2} + Q_{C_2,2} = 5 \times 10^{-6} V_{out}$$

Since we only have one floating node, V_{out}, then:

$$Q_{tot,1} = Q_{tot,2}$$
$$-6\mu C = 5 \times 10^{-6} V_{out}$$
$$V_{out} = -\frac{6}{5} V$$

10. Superposition (5 points)

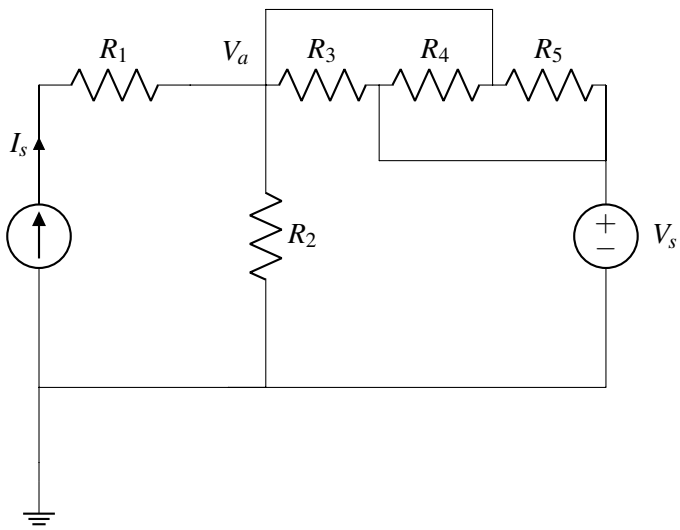

Assume $R_3 = R_4 = R_5 = 75\Omega$, $R_1 = R_2 = 50\Omega$, V_s is 1V, I_s is 0.1A.

(a) (1 point) Assuming we want to solve for the voltage at V_a using super-position, how many sources do we need to zero out? Briefly explain.

Solution: We need to zero out 2 since there are two sources, V_s and I_s. We will need to null out both and solve for V_a, twice.

(b) (4 points) Find the voltage at node V_a.

Solution:

First we should point out that R_3, R_4, and R_5 are all in parallel, making $R_{eq} = 25\Omega$

With this we can simplify the circuit to 3 resistors and then break it into a current source based circuit and a voltage source based circuit.

Current Source Nulled:

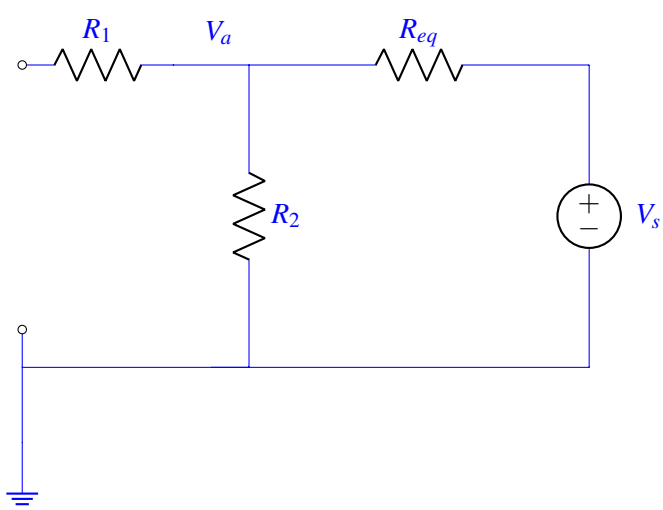

In this case, we can use the voltage divider formula to solve for V_a because no current flows through R_1.
$V_{a1} = \frac{R_2}{R_2+R_{eq}} V_s$
Voltage Source Nulled:

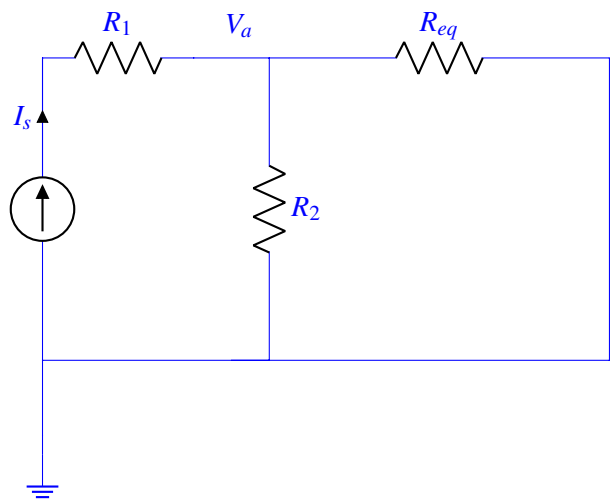

The easiest way to solve this circuit is to find the equivalence between R_{eq} and R_2. This way, we know the current going through the equivalent resistance. Because it is touching ground on one side and V_{a2} on the other, we just have that V_{a2} is the voltage drop across this resistor.
$V_{a2} = I_s * (R_2 || R_e q)$
This makes $V_a = V_{a1} + V_{a2} = \frac{R_2}{R_2+R_{eq}} V_s + I_s * (R_2 || R_e q) = \frac{50}{50+25} 1 + 0.1 * (\frac{50*25}{50+25}) = \frac{2}{3} + \frac{5}{3} = \frac{7}{3} V$

11. The Venin and Nor Ton (6 points)

You pick up a "broken" circuit that looks like this:

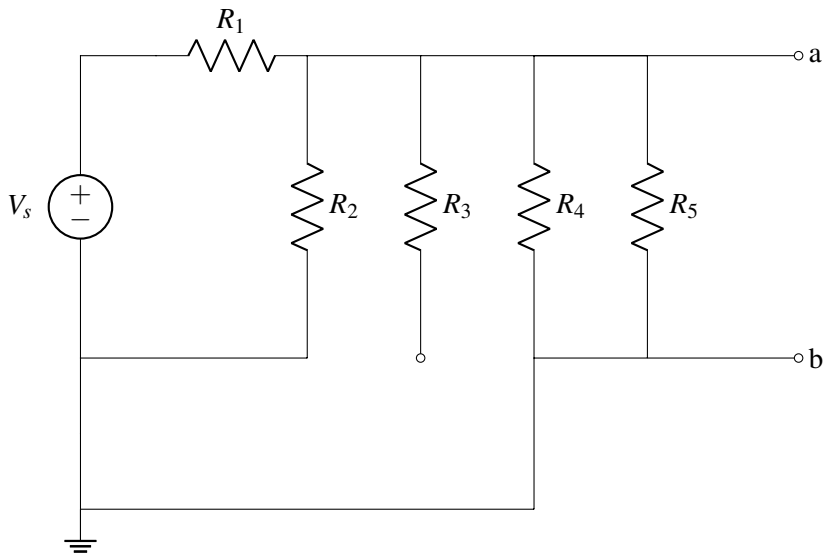

Assume $R_2 = R_3 = R_4 = R_5 = 75\Omega$, $R_1 = 25\Omega$, V_s is 1V.

To simplify the circuit and see how it works, let us find the Thevenin and Norton equivalent circuits from the perspective of nodes a and b.

(a) (2 points) Find the Thevenin equivalent resistance across nodes a and b.

Solution: We could put a test source, measure the response, and then use ohm's law. Another, much faster method would be to null the independent source and see if there is a clear resistor between nodes a and b! Luckily, we can quickly see there are two parallel resistors between a & b so

$$R_{th} = R_1||R_2||R_4||R_5 = \frac{25}{2}\Omega \tag{1}$$

(b) (2 points) Find the Thevenin equivalent voltage across nodes a and b.

Solution: We have that R_2, R_4 and R_5 are all in parallel, leaving us with a voltage divider equation for the thevenin voltage

$$V_{th} = \frac{(R_3||R_4||R_5)}{R_1 + (R_3||R_4||R_5)} V_s = \frac{25}{25+25} V_s = \frac{1}{2} V \tag{2}$$

(c) (2 points) Find the Norton equivalent current from nodes a and b.

Solution:

We could use KCL, but we have already calculated the Thevenin resistance and voltage. This means we can use ohm's law to quickly find the Norton equivalent current.

$$I_{no} = \frac{V_{th}}{R_{th}} = \frac{1}{25}A \tag{3}$$

12. How (not) to do least squares (7 points)

Bryan decides to use least squares to model the speed of his new car, the "Kernelridge 3000". He thinks that the speed y, is related to the machine power α and learning rate β, which he can measure and collect data about. Suppose he thinks the relationship is the following formula: $\alpha^2 x_1 + \alpha\beta x_2 + \beta^2 x_3 = y$, where x_1, x_2, x_3 are model parameters. He also collects the following data:

α	β	y
3	6	877
6	7	748
7	2	658
1	10	184

(a) (1 points) Explicitly set up the linear system $\mathbf{A}\vec{x} = \vec{y}$. (Do not solve for least squares!)

Solution:

$$\begin{bmatrix} 9 & 18 & 36 \\ 36 & 42 & 49 \\ 49 & 14 & 4 \\ 1 & 10 & 100 \end{bmatrix} \begin{bmatrix} x_1 \\ x_2 \\ x_3 \end{bmatrix} = \begin{bmatrix} 877 \\ 748 \\ 658 \\ 184 \end{bmatrix} \tag{4}$$

(b) (2 points) Suppose that Bryan gets the following matrix for A:

$$\mathbf{A} = \begin{bmatrix} 2 & 6 & 1 \\ 2 & 4 & 4 \\ 6 & 16 & 6 \end{bmatrix} \tag{5}$$

Explain why least squares doesn't work here.

Solution:

If columns of $\mathbf{A}$ are linearly dependent, then $\mathbf{A}^T\mathbf{A}$ will not be invertible and least squares will fail. This comes from the fact that nullspace($\mathbf{A}$) = nullspace($\mathbf{A}^T\mathbf{A}$). Thus, we need to check if the columns are linearly dependent. You can do this through Gaussian Elimination or through inspection(you can see that $2R_1 + R_2 = R_3$, where R_1, R_2, R_3 are the rows, and since the matrix is square, the columns are linearly dependent too).

(c) (2 points) Bryan now recollects the data, but accidentally writes all his data vertically instead of horizontally and gets a matrix $\mathbf{A}_f$. So each column is a data point rather each row. He doesn't want to rewrite the matrix, so he wants to use $\mathbf{A}_f$ to solve least squares for $\vec{x}$. Write the new least squares solution in terms of $\mathbf{A}_f$ and y.

Solution:

So since the data is now vertical, this just means that $\mathbf{A}_f^T = \mathbf{A}$. Thus, we just to substitute this into our least squares solution, so

$$\begin{aligned} \vec{x} &= (\mathbf{A}^T\mathbf{A})^{-1}\mathbf{A}^T y \\ &= (\mathbf{A}_f\mathbf{A}_f^T)^{-1}\mathbf{A}_f y \end{aligned} \tag{6}$$

(d) (2 points) Now suppose Bryan recollects the data again but accidentally multiplied all the data in the $\mathbf{A}$ matrix by factor a 3 and gets $\mathbf{A}_{new}$. He uses this matrix to do least squares gets $\vec{x}_{new}$. Suppose the correct vector from least squares is $\vec{x}_{corr}$. Express $\vec{x}_{corr}$ in terms of $\vec{x}_{new}$.

Solution:

Since $\mathbf{A}_{new}$ is just all the values scaled by 3, we have $3\mathbf{A} = \mathbf{A}_{new}$. Therefore:

$$\begin{aligned}
\vec{x}_{new} &= (\mathbf{A}_{new}^T \mathbf{A}_{new})^{-1} \mathbf{A}_{new}^T y \\
&= (9\mathbf{A}^T \mathbf{A})^{-1} 3\mathbf{A}^T y \\
&= \frac{1}{3}(\mathbf{A}^T \mathbf{A})^{-1} \mathbf{A}^T y \\
&= \frac{1}{3}\vec{x}_{corr}
\end{aligned} \tag{7}$$

13. OpAmp Capacity (6 points)

(a) (3 points) Assume all the capacitors in the given circuit were initially uncharged. Solve for $\phi(t)$, the voltage across C_3, in terms of I_s, C_1, C_2, C_3, t. ($\phi(t)$ may not depend on all of these):

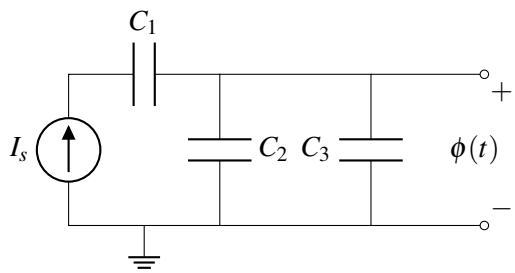

Solution:

The first step is to combine C_2 and C_3,

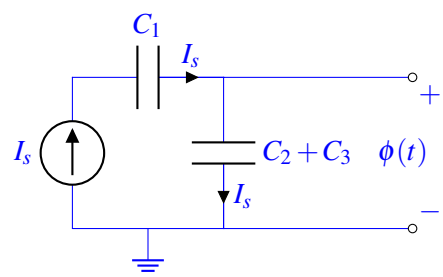

From here, we know the current going through the equivalent capacitor and can thus, write the voltage following from $I_s = (C_2 + C_3)\frac{d\phi}{dt}$

$$\phi(t) = \frac{I_s t}{C_2 + C_3} \tag{8}$$

(b) (3 points) Assume that the output calculated from the previous circuit is given by $\phi_1(t)$. Calculate $V_{out}(t)$ in terms of R_1, R_2, R_3 and $\phi_1(t)$ for the following circuit.

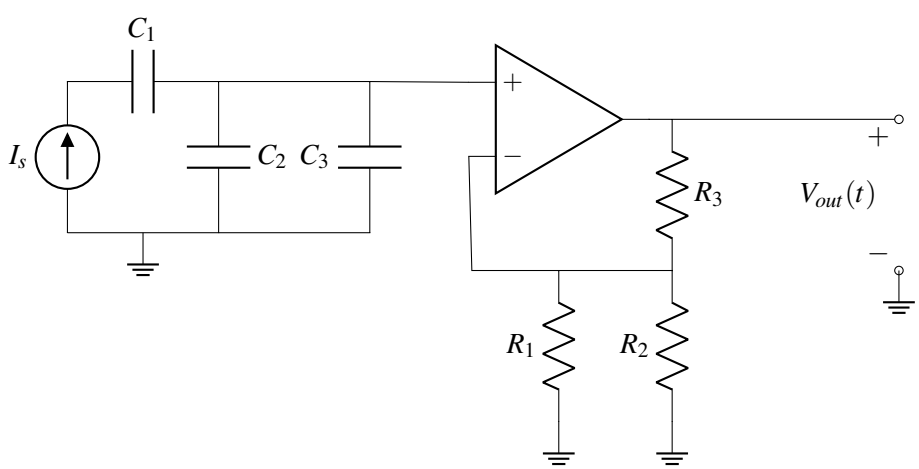

Solution:

This can be simplified to

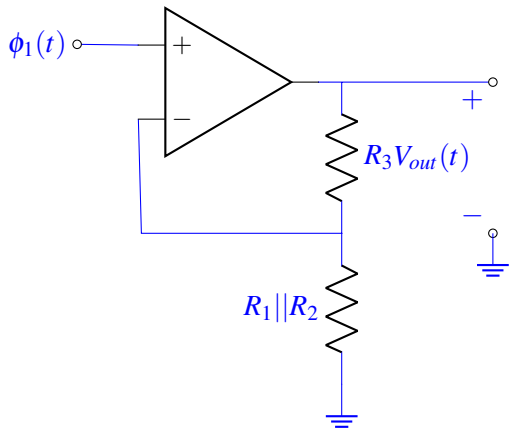

which is just a non inverting opamp.

$$V_{out}(t) = (1 + \frac{R_3(R_1 + R_2)}{R_1 R_2})\phi_1(t) = (1 + \frac{R_3}{R_2} + \frac{R_3}{R_1})\phi_1(t) \tag{9}$$

14. Ex-Span-ion Pack II: Dot Products (8 points)

(a) (3 points) Let $\vec{x} = \begin{bmatrix}1\\1\\1\end{bmatrix}, \vec{y} = \begin{bmatrix}1\\1\\-1\end{bmatrix}, \vec{z} = \begin{bmatrix}1\\-1\\0\end{bmatrix}$.

i: Are $\vec{x}$ and $\vec{y}$ linearly independent? Briefly explain.

ii: What is $\langle a\vec{x}+b\vec{y}+c\vec{z},\vec{z}\rangle$ in terms of a,b and c?

iii: If $\langle a\vec{x}+b\vec{y}+c\vec{z},\vec{z}\rangle = 0$, what is c?

Solution:

i: Yes, we can run Gaussian elimination to see that there is a pivot in each column:

$$\begin{bmatrix}1 & 1 & 1\\1 & 1 & -1\\1 & -1 & 0\end{bmatrix} \to \begin{bmatrix}1 & 1 & 1\\0 & 0 & -2\\0 & -2 & -1\end{bmatrix} \to \begin{bmatrix}1 & 1 & 1\\0 & -2 & -1\\0 & 0 & -2\end{bmatrix}$$

ii:

$$\begin{aligned}\langle a\vec{x}+b\vec{y}+c\vec{z},\vec{z}\rangle &= a\langle\vec{x},\vec{z}\rangle + b\langle\vec{y},\vec{z}\rangle + c\langle\vec{z},\vec{z}\rangle\\ &= a\langle\begin{bmatrix}1\\1\\1\end{bmatrix},\begin{bmatrix}1\\-1\\0\end{bmatrix}\rangle + b\langle\begin{bmatrix}1\\1\\-1\end{bmatrix},\begin{bmatrix}1\\-1\\0\end{bmatrix}\rangle + c\langle\begin{bmatrix}1\\-1\\0\end{bmatrix},\begin{bmatrix}1\\-1\\0\end{bmatrix}\rangle\\ &= a\cdot 0 + b\cdot 0 + c\cdot 2\\ &= 2c\end{aligned} \tag{10}$$

iii: Based on part ii, $2c = 0$, so $c = 0$

(b) (5 points) We have a set of linearly independent vectors $\{v_1, v_2, ...v_n\}$ and a nonzero vector v_{n+1} such that $\langle v_i, v_{n+1}\rangle = 0$ for all $1 \le i \le n$. Prove that the set $\{v_1, v_2...v_n, v_{n+1}\}$ is linearly independent. (Hint: Use the definition of linear independence with dot products)

Solution: So there are a few possible ways to solve for this.

First, we will talk about the non "mathy" way to prove this that doesn't use the hint. The way we do this is to try to argue that v_{n+1} is not in the span of the other vectors.

If v_{n+1} is not in the span of the other vectors, then the set is linearly independent since we already have the fact that $\{v_1, v_2, ...v_n\}$ is linearly independent as adding v_{n+1} will increase the span of the set. Since $\langle v_i, v_{n+1}\rangle = 0$ for all $1 \le i \le n$, this means that v_{n+1} is orthogonal to all the other vectors. Thus any linear combination of the vectors in the set is orthogonal to v_{n+1}, so v_{n+1} will not in the span of the given vectors(You don't need to prove this part). Therefore, the set $\{v_1, v_2...v_n, v_{n+1}\}$ is linearly independent. You must explicitly state that v_{n+1} is not in the span of the other vectors because it is orthogonal to any linear combination to get full credit.

The mathematical proof will use the definitions of linear independence and apply it to dot product. Suppose we have $\alpha_1\vec{v}_1 + \alpha_2\vec{v}_2...\alpha_n\vec{v}_n + \alpha_{n+1}\vec{v}_{n+1} = 0$ for some scalars α_i. Then if we can prove that the scalars must be all 0, the set is linearly independent. Suppose we apply this linear combination to a dot product with v_{n+1}, then

$$
\begin{aligned}
0 &= \alpha_1\vec{v}_1 + \alpha_2\vec{v}_2 \ldots \alpha_n\vec{v}_n + \alpha_{n+1}\vec{v}_{n+1} \\
\langle 0, \vec{v}_{n+1}\rangle &= \langle \alpha_1\vec{v}_1 + \alpha_2\vec{v}_2 \ldots \alpha_n\vec{v}_n + \alpha_{n+1}\vec{v}_{n+1}, \vec{v}_{n+1}\rangle \\
0 &= \alpha_1\langle \vec{v}_1, \vec{v}_{n+1}\rangle + \alpha_2\langle \vec{v}_2, \vec{v}_{n+1}\rangle \ldots \alpha_n\langle \vec{v}_n, \vec{v}_{n+1}\rangle + \alpha_{n+1}\langle \vec{v}_{n+1}, \vec{v}_{n+1}\rangle \\
0 &= \alpha_{n+1}\langle \vec{v}_{n+1}, \vec{v}_{n+1}\rangle
\end{aligned} \tag{11}
$$

Thus $\alpha_{n+1}\langle \vec{v}_{n+1}, \vec{v}_{n+1}\rangle = 0$. Since $\vec{v}_{n+1}$ is nonzero vector, this means $\alpha_{n+1} = 0$. From the original equation, we are left with $\alpha_1\vec{v}_1 + \alpha_2\vec{v}_2 \ldots + \alpha_n\vec{v}_n = 0$. However, we know that these vectors are linearly independent, so by definition, the scalars are just 0. Therefore, the only values α that fulfill this definition is 0. Thus, the set $\{v_1, v_2 \ldots v_n, v_{n+1}\}$ is linearly independent.