EECS 16B Designing Information Devices and Systems II
Fall 2018 Elad Alon and Miki Lustig **Discussion 7B**

Block Diagrams

Discrete Time

A useful way to visualize systems is to use block diagrams. We will introduce this topic via examples. Consider the following discrete system.

$$\begin{aligned} x_1(t+1) &= \quad x_1(t) - 2x_2(t) \\ x_2(t+1) &= -x_1(t) + 4x_2(t) + u(t) \end{aligned} \tag{1}$$

In matrix form, this can be represented as,

$$\vec{x}(t+1) = \begin{bmatrix} 1 & -2 \\ -1 & 4 \end{bmatrix} \vec{x}(t) + \begin{bmatrix} 0 \\ 1 \end{bmatrix} u(t)$$

We will know construct a block diagram representation. We will use a delay block to denote a delay of one. Refer to Figure 1.

Figure 1: A simple block diagram denoting the delay block.

We will now construct a block diagram for the above system. This is in Figure 2. Note the use of the adder blocks (the plus signs), the scaling blocks (the triangles) and the minus signs to indicate subtractions.

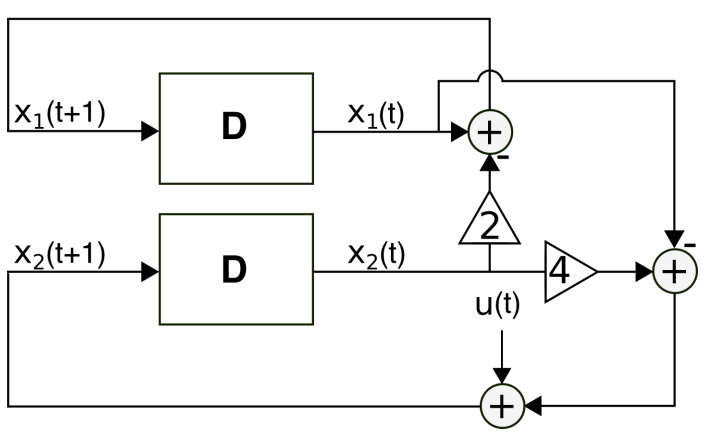

Figure 2: A block diagram denoting the system (1).

Continuous Time

It is a similar story in continuous time. The only difference is that instead of a delay block, we use an integrator block (denoted $\int$ or $\int_{-\infty}^{t}$). This is in Figure 3.

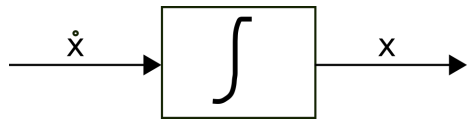

Figure 3: A block diagram denoting an integrator.

Feedback Control

Open Loop System

Consider the following discrete time system and its block diagram representation.

$$\vec{x}(t+1) = A_{OL}\vec{x}(t) + B\vec{u}(t)$$

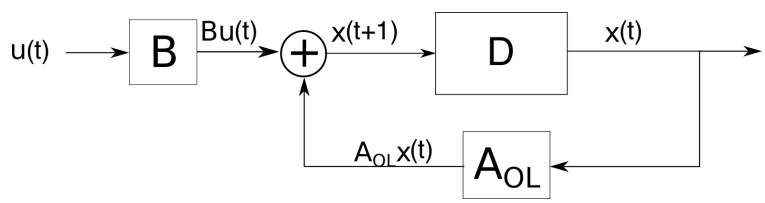

Figure 4: Open loop block diagram.

We refer to this system as the "open loop model" for a physical system. In many cases the open loop model for the system is not something we can change, i.e. the A_{OL} and B matrices are fixed. Because the A_{OL} and B matrices are physical parameters the eigenvalues of A_{OL} are not necessarily stable. To be able to use these systems effectively, we need a method of modifying the A_{OL} matrix to make the system stable, and to be able to change the system dynamics to match a desired performance.

Feedback Derivations

What we do have control over in this situation, is the control input. We also have access to the state output variable $\vec{x}(t)$ at each time step. To modify the full matrix, we can feed the output $\vec{x}(t)$ back into our input vector $\vec{u}(t)$ with some scaling matrix K. Doing this allows us to modify the effective A matrix of our system, which sets eigenvalues of the system. This can be seen graphically with the following closed loop representation of the system. Here, the $\vec{r}$ vector represents some reference input.

$$\begin{aligned}
\vec{x}(t+1) &= A_{OL}\vec{x}(t) + B\vec{u}(t) \\
&= A_{OL}\vec{x}(t) + B(K\vec{x}(t) + \vec{r}(t)) \\
&= (A_{OL} + BK)\vec{x}(t) + B\vec{r}(t) \\
&= A_{CL}\vec{x}(t) + B\vec{r}(t)
\end{aligned}$$

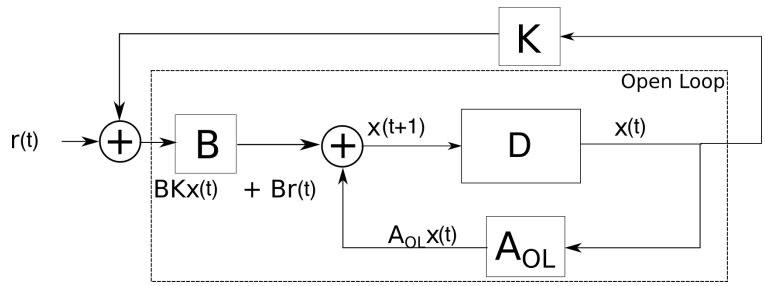

Figure 5: Closed loop block diagram.

Now the eigenvalues of our system are governed by the eigenvalues of $A_{CL} = A_{OL} + BK$. Because we took the output of our system and fed it through the K matrix, we are also able to set the values of the K matrix, and effectively the values contained within the A_{CL} matrix. This means that we have taken the previously unstable A_{OL} system and made it into a stable system. This idea of feedback is used extensively to control otherwise unstable systems, and you will be using it to control your robot car.

Note: We haven't said anything about the controllability of our original open loop system. In fact, to be able to modify all of the eigenvalues of our system, we assume that the original open loop system is controllable, i.e. A_{OL}, B are a controllable pair. This is an intuitive result, as if we are unable to control the original system with our input vector, we should not be able to change all of its eigenvalues using that original input vector.

Questions

1. Block Diagrams

(a) Create a block diagram for the system below:

$$\begin{bmatrix} s(t+1) \\ g(t+1) \\ r(t+1) \end{bmatrix} = \begin{bmatrix} 1 & 1 & 0 \\ 0 & 0 & 1 \\ 0 & 0 & 0 \end{bmatrix} \begin{bmatrix} s(t) \\ g(t) \\ r(t) \end{bmatrix} + \begin{bmatrix} 0 \\ 0 \\ 1 \end{bmatrix} u(t) + \begin{bmatrix} -1 \\ 0 \\ 0 \end{bmatrix} w(t)$$

(b) Recall the linearized state space model for the ring oscillator below. Draw a block diagram describing this system.

$$\frac{d}{dt} \begin{bmatrix} v_1(t) \\ v_2(t) \\ v_3(t) \end{bmatrix} = \begin{bmatrix} -\frac{1}{10^{-8}} & 0 & -\frac{2}{10^{-8}} \\ -\frac{2}{10^{-8}} & -\frac{1}{10^{-8}} & 0 \\ 0 & -\frac{2}{10^{-8}} & -\frac{1}{10^{-8}} \end{bmatrix} \begin{bmatrix} v_1(t) \\ v_2(t) \\ v_3(t) \end{bmatrix}$$

2. Eigenvalues Placement in Discrete Time

Consider the following linear discrete time system

$$\vec{x}(t+1) = \begin{bmatrix} 0 & 1 \\ 2 & -1 \end{bmatrix} \vec{x}(t) + \begin{bmatrix} 1 \\ 0 \end{bmatrix} u(t)$$

(a) Is this system controllable?

(b) Is the linear discrete time system stable?

(c) Derive a state space representation of the resulting closed loop system using state feedback of the form $u(t) = \begin{bmatrix} k_1 & k_2 \end{bmatrix} \vec{x}(t)$

(d) Find the appropriate state feedback constants, k_1, k_2 in order the state space representation of the resulting closed loop system to place the eigenvalues at $\lambda_1 = -\frac{1}{2}, \lambda_2 = \frac{1}{2}$

(e) Is the system now stable?

3. Eigenvalues Placement in Continuous Time

Consider a model for the position y of a vehicle

$$\ddot{y}(t) = u(t).$$

(a) Write a state space model for this system.

(b) Is this system controllable?

(c) Design a state feedback controller to put the eigenvalues of the system at $\lambda = -1 \pm j$.

(d) Now suppose that we can only measure the velocity x_2. Can we still find a control of the form $u(t) = kx_2(t)$ that stabilizes the system?