EECS 16B Designing Information Devices and Systems II
Fall 2019 UC Berkeley

HW 3

This homework is due on 09, 23, 2019, at 11:59PM.
Self-grades are due on 09, 25, 2019, at 11:59PM.

1. **RLC Responses: Initial Part**

Consider the following circuit like you saw in lecture:

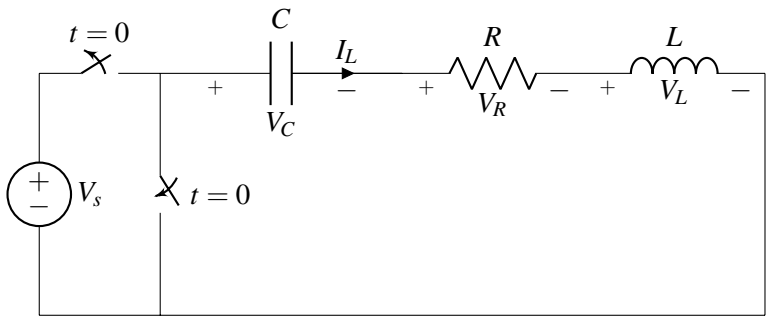

Assume the circuit above has reached steady state for $t < 0$. At time $t = 0$, the switch changes state and disconnects the voltage source, replacing it with a short.

In this problem, the current through the inductor and the voltage across the capacitor are the natural physical state variables since these are what correlate to how energy is actually stored in the system. (A magnetic field through the inductor and an electric field within the capacitor.)

(a) **Write the system of differential equations in terms of state variables $x_1(t) = I_L(t)$ and $x_2(t) = V_C(t)$ that describes this circuit for $t \geq 0$. Leave the system symbolic in terms of V_s, L, R, and C.**

(b) **Write the system of equations in vector/matrix form with the vector state variable $\vec{x}(t) = \begin{bmatrix} x_1(t) \\ x_2(t) \end{bmatrix}$.**

This should be in the form $\frac{d}{dt}\vec{x}(t) = A\vec{x}(t)$ with a 2×2 matrix A.

(c) **Find the eigenvalues of the A matrix symbolically.**
(Hint: the quadratic formula will be involved.)

(d) **Under what condition on the circuit parameters R, L, C are there going to be a pair of distinct purely real eigenvalues of A?**

(e) **Under what condition on the circuit parameters R, L, C are there going to be a pair of purely imaginary eigenvalues of A?**

(f) **Assuming that the circuit parameters are such that there are a pair of (potentially complex) eigenvalues λ_1, λ_2 so that $\lambda_1 \neq \lambda_2$, find eigenvectors $\vec{v}_{\lambda_1}, \vec{v}_{\lambda_2}$ corresponding to them.**
(HINT: Rather than trying to find the relevant nullspaces, etc., you might just want to try to find eigenvectors of the form $\begin{bmatrix} 1 \\ ? \end{bmatrix}$ where we just want to find the missing entry. Can you see from the structure of the A matrix why we might want to try that guess?)

(g) Assuming circuit parameters such that the two eigenvalues of A are distinct, let $V = [\vec{v}_{\lambda_1}, \vec{v}_{\lambda_2}]$ be a specific eigenbasis. Consider a coordinate system for which we can write $\vec{x}(t) = V\vec{\tilde{x}}(t)$. **What is the $\widetilde{A}$ so that $\frac{d}{dt}\vec{\tilde{x}}(t) = \widetilde{A}\vec{\tilde{x}}(t)$?** It is fine to have your answer expressed symbolically using λ_1, λ_2.

2. RLC Responses: Overdamped Case

Building on the previous problem, consider the following circuit with specified component values:

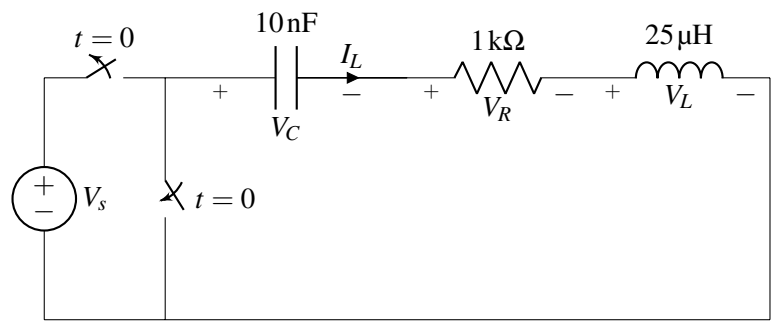

Assume the circuit above has reached steady state for $t < 0$. At time $t = 0$, the switch changes state and disconnects the voltage source, replacing it with a short.

For this problem, we use the same notations as in Problem 1.

(a) Suppose $R = 1\,\text{k}\Omega$ and the other component values are as specified in the circuit. Assume that $V_s = 1$ Volt. **Find the initial conditions for $\vec{\tilde{x}}(0)$.** Recall that $\vec{\tilde{x}}$ is in the changed "nice" eigenbasis coordinates from the first problem.

(b) Continuing the previous part, **find $x_1(t) = I_L(t)$ and $x_2(t) = V_C(t)$ for $t \geq 0$.**

Note: Because there is a lot of resistance, this is called the "overdamped" case. However, at this particular point in this problem, you probably have no intuition for what is "over" about it. That is fine. There are more problems coming to help us understand this.

3. Complex Numbers (PRACTICE)

A common way to visualize complex numbers is to use the complex plane. Recall that a complex number z is often represented in Cartesian form.

$$z = x + jy \text{ with } \text{Re}\{z\} = x \text{ and } \text{Im}\{z\} = y$$

See Figure 1 for a visualization of z in the complex plane.

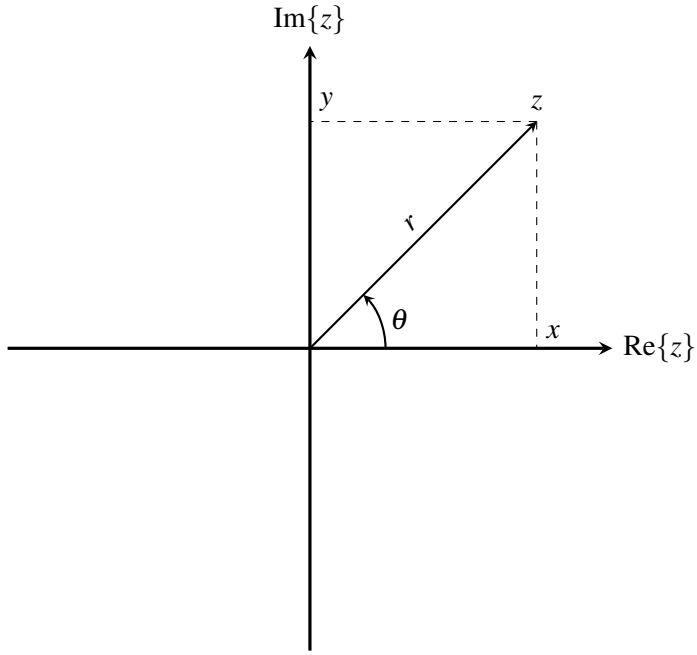

Figure 1: Complex Plane

In this question, we will derive the polar form of a complex number and use this form to make some interesting conclusions.

(a) **Calculate the length of z in terms of x and y as shown in Figure 1.** This is the magnitude of a complex number and is denoted by $|z|$ or r.

(Hint: Use the Pythagorean theorem.)

(b) **Represent x, the real part of z, and y, the imaginary part of z, in terms of r and θ.**

(c) **Substitute for x and y in z.** Use Euler's identity[1] $e^{j\theta} = \cos\theta + j\sin\theta$ to **conclude that,**

$$z = re^{j\theta}.$$

(d) In the complex plane, **sketch the set of all the complex numbers such that $|z| = 1$. What are the z values where the sketched figure intersects the real axis and the imaginary axis?**

(e) If $z = re^{j\theta}$, **prove that** $\bar{z} = re^{-j\theta}$. Recall that the complex conjugate of a complex number $z = x + jy$ is $\bar{z} = x - jy$.

(f) **Show (by direct calculation) that,**

$$r^2 = z\bar{z}.$$

4. RLC Responses: Undamped Case

Building on the previous problem, consider the following circuit with specified component values:

[1] also known as de Moivre's Theorem.

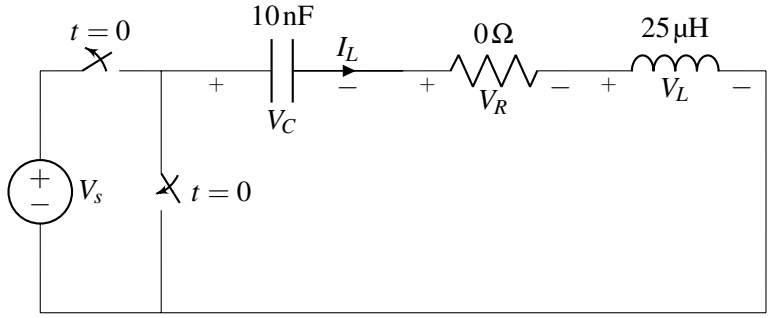

Assume the circuit above has reached steady state for $t < 0$. At time $t = 0$, the switch changes state and disconnects the voltage source, replacing it with a short.

For this problem, we use the same notations as in Problem 1.

(a) Suppose $R = 0\,\text{k}\Omega$ and the other component values are as specified in the circuit. Assume that $V_s = 1$ Volt. **Find the initial conditions for $\vec{\tilde{x}}(0)$.** Recall that $\vec{\tilde{x}}$ is in the changed "nice" eigenbasis coordinates from the first problem.

(b) Continuing the previous part, **find $x_1(t) = I_L(t)$ and $x_2(t) = V_C(t)$ for $t \geq 0$.**

(c) Continuing the previous part, **are the waveforms for $x_1(t)$ and $x_2(t)$ "transient" — do they die out with time?**

Note: Because there is no resistance, this is called the "undamped" case.

5. RLC Responses: Underdamped Case

Building on the previous problem, consider the following circuit with specified component values:

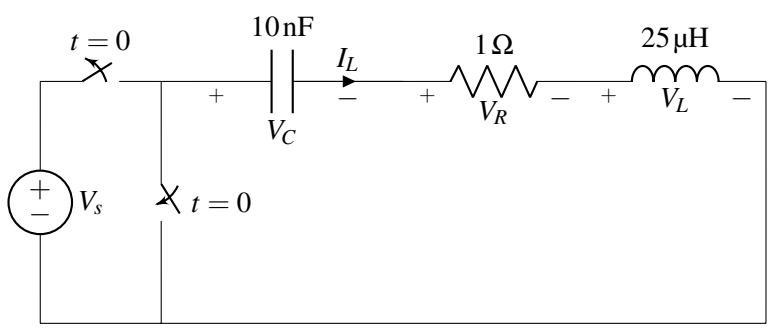

Assume the circuit above has reached steady state for $t < 0$. At time $t = 0$, the switch changes state and disconnects the voltage source, replacing it with a short.

For this problem, we use the same notations as in Problem 1.

(a) Now suppose that $R = 1\,\Omega$ and the other component values are as specified in the circuit. Assume that $V_s = 1$ Volt. **Find the initial conditions for $\vec{\tilde{x}}(0)$.** Recall that $\vec{\tilde{x}}$ is in the changed "nice" eigenbasis coordinates from the first problem.

(b) Continuing the previous part, **find $x_1(t) = I_L(t)$ and $x_2(t) = V_C(t)$ for $t \geq 0$.**
(HINT: Remember that $e^{a+jb} = e^a e^{jb}$.)

(c) Continuing the previous part, **are the waveforms for $x_1(t)$ and $x_2(t)$ "transient" — do they die out with time?**

Note: Because the resistance is so small, this is called the "underdamped" case. It is good to reflect upon these waveforms to see why engineers consider such behavior to be reflective of systems that don't have enough damping.

(d) Notice that you got answers in terms of complex exponentials. **Why did the final voltage and current waveforms end up being purely real?**

6. RLC Responses: Critically Damped Case

Building on the previous problem, consider the following circuit with specified component values: (Notice R is not specified yet. You'll have to figure out what that is.)

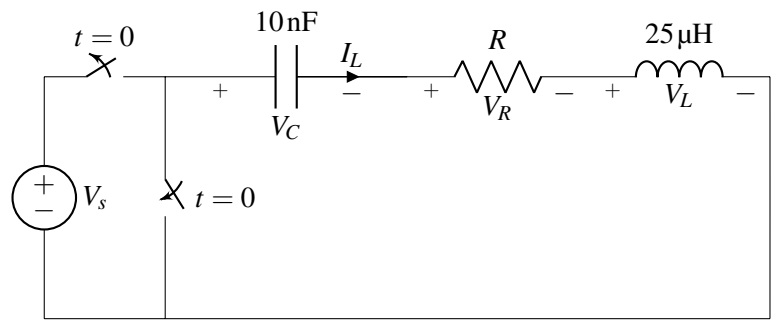

Assume the circuit above has reached steady state for $t < 0$. At time $t = 0$, the switch changes state and disconnects the voltage source, replacing it with a short.

For this problem, we use the same notations as in Problem 1.

(a) **For what value of R is there going to be a single eigenvalue of A?**

(b) **When there is a single eigenvalue of this particular matrix A, what is the dimensionality of the corresponding eigenspace?** (i.e. how many linearly independent eigenvectors can you find associated with this eigenvalue?) For this part, assume the given values for the capacitor and the inductor, as well as the critical value for the resistance R that you found in the previous part. It is easier to do the algebra with a non-symbolic matrix to work with.

(c) For a new coordinate system V, pick the first vector as being $\vec{v}_\lambda$ — the eigenvector you found for the single eigenvalue λ above. For the second vector, just pick $\vec{v}_2 = \begin{bmatrix} 0 \\ 1 \end{bmatrix}$. This implicitly defines variables $\vec{\widetilde{x}}$ in the transformed coordinates so that $\vec{x}(t) = V\vec{\widetilde{x}}(t)$. **What is the resulting $\widetilde{A}$ matrix defining the system of differential equations in the transformed coordinates?**

(d) Notice that the second differential equation for $\frac{d}{dt}\widetilde{x}_2(t)$ in the above coordinate system only depends on $\widetilde{x}_2(t)$ itself. There is no cross-term dependence. **Compute the initial condition for $\widetilde{x}_2(0)$ and write out the solution to this scalar differential equation for $\widetilde{x}_2(t)$ for $t \geq 0$.**

(e) With an explicit solution to $\widetilde{x}_2(t)$ in hand, substitute this in and **write out the resulting scalar differential equation for $\widetilde{x}_1(t)$.** This should effectively have an input in it.

Note: this is just the differential-equations counterpart to the back-substitution step that you remember from learning Gaussian Elimination in 16A, once you had done one full downward pass of Gaussian

Elimination. You went upwards and just substituted in the solution that you found to remove this dependence from the equations above. This is the exact same design pattern, except for a system of linear differential equations.

(f) **Solve the above scalar differential equation with input and write out what $\widetilde{x}_1(t)$ is for $t \geq 0$.**
(HINT: You might want to look at a problem on an earlier homework for help with this.)

(g) **Find $x_1(t)$ and $x_2(t)$ for $t \geq 0$ based on the answers to the previous three parts.**
This particular case is called the "critically damped case" for an RLC circuit. It is called this because the R value you found demarcates the boundary between solutions of the underdamped and overdamped variety.

(h) To see the impact of changing the parameters R and C, **play with the included Jupyter notebook**. See what happens above and below the critically damped condition. **Comment on what you observed.**
Note: The curve evaluation code in the included notebook has been slightly obfuscated from the approach taken in the parts above for solving the differential equations. So, it is not really going to be that useful to read those details of the code. You are, of course, free to try out your own expressions by editing the code as well as to add plots for individual parts — like separating out the contributions that are coming from each of the underlying modes for this circuit (i.e. the contribution coming from each of the eigenvalues).

7. Alternative "second order" perspective on solving the RLC circuit

Consider the following circuit like you saw in lecture, discussion, and the previous few problems:

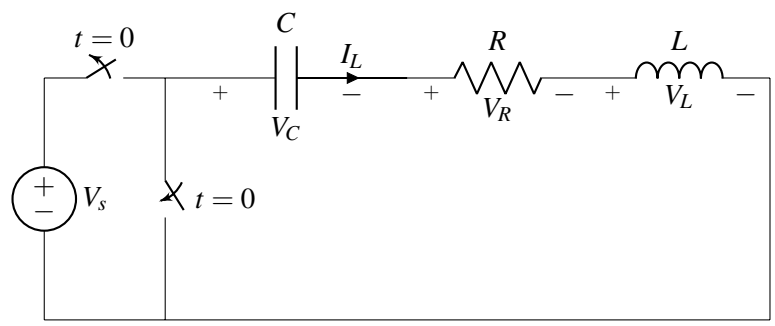

Suppose now we insisted on expressing everything in terms of one waveform $V_C(t)$ instead of two of them (voltage across the capacitor and current through the inductor). This is called the "second-order" point of view, for reasons that will soon become clear.

For this problem, use R for the resistor, L for the inductor, and C for the capacitor in all the expressions until the last part.

(a) **Write the current I_L through the inductor in terms of the voltage through the capacitor.**

(b) Now, notice that the voltage drop across the inductor involves $\frac{d}{dt}I_L$. **Write the voltage drop across the inductor in terms of the second derivative of V_C.**

(c) For this part, treat $V_s(t)$ as a generic input waveform — don't necessarily view the switch as being thrown, etc.
Now write out a differential equation governing $V_C(t)$ in the form of

$$\frac{d^2}{dt^2}V_C(t) + a \cdot \frac{d}{dt}V_C(t) + b \cdot V_C(t) + c(t) = 0. \tag{1}$$

where a, b and $c(t)$ are terms you need to figure out by analyzing the circuit.

(HINT: The $c(t)$ needs to involve $V_s(t)$ in some way.)

(d) We don't know how to solve equations like Eq. (1). To reduce this to something we know how to solve, we define $X(t)$ as an additional state, with $X(t) = \frac{d}{dt}V_C(t)$. Note that this directly gives us one equation: $\frac{d}{dt}V_C(t) = X(t)$. This leaves us needing an equation for $\frac{d}{dt}X(t)$. **Express $\frac{d}{dt}X(t)$ in terms of $X(t)$, $V_C(t)$, and $V_s(t)$. Write a matrix differential equation in terms of $V_C(t)$ and $X(t)$.** Your answer should be in the form:

$$\frac{d}{dt}\begin{bmatrix} X(t) \\ V_C(t) \end{bmatrix} = \underbrace{\begin{bmatrix} ? & ? \\ ? & ? \end{bmatrix}}_{A} \begin{bmatrix} X(t) \\ V_C(t) \end{bmatrix} + \begin{bmatrix} ? \\ ? \end{bmatrix} \cdot V_s(t). \tag{2}$$

(e) **Find the eigenvalues and eigenvectors of the matrix A from Eq.** (2)**.**

(Hint: use the same trick you did in problem 1. Don't do this the hard way.)

(f) **Revisit Problems 2 and 5, and use the values of R, L, C, and the same initial conditions to solve for V_C.** Did you get the same answer as in problems 2 and 5?

8. A toy model for a solar cell (PRACTICE)

In 16A's imaging labs, you used an electronic component that responded to light in a way that could be detected electrically. To truly properly understand such things, you need to take courses like EE130 and EE134. However, in this problem, we will walk you through the modeling of a heavily simplified caricature of such a device.

In Figure 2, we illustrate what is effectively one-half of a solar cell. In simple English, what is happening is that light is striking the device and constantly causing free electron/hole pairs to be created (think of this as a kind of puddle of free charge carriers). On one side (depicted here), the electrons end up diffusing through the material until they reach a metal wire, at which point they run through the (not shown) attached circuit to meet their counterpart holes on the other side of the solar cell. The other half is symmetric, except dealing with holes. EECS 16B is a course without Physics prerequisites, and so the detailed nature of the physics here is out of scope. However, we would like to see the connection between the density of charge carriers being created by the light and the current that flows out of the solar cell.

Again, this problem is a vastly simplified caricature of what is going on in the real world, but it allows us to both get a feeling for what is happening as well as practice many core skills in 16B.

The most fundamental thing in this problem is to look at the steady state distribution of free charge carriers in the following setup, depicted in Figure 2.

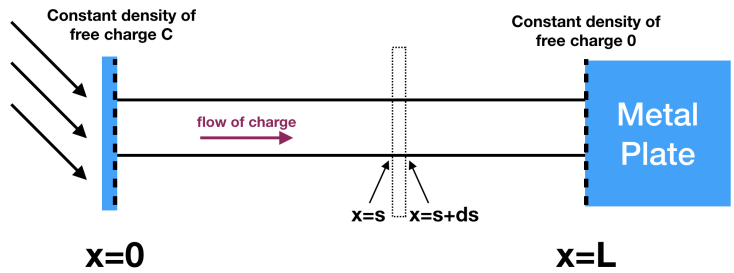

Figure 2: A hypothetical half of a toy model for a solar cell. At $x = 0$, where the light is liberating charge, the density q of free charge carriers is held constant at C which depends on the intensity of the incident light. Meanwhile, at $x = L$, the density of free charge carriers is held constant at 0 because they get whisked away by the conducting metal wire — to race around the circuit to be reunited with their separated partners.

Let us define $q(x,t)$ as the density of charge at point x at time t.

Although we are interested in the steady-state behavior where things are going to end up not depending on t, the potential dependence on t is important to understand the differential equations that govern the behavior of the system.

In the above figure (Fig. 2), a plate with special material at $x = 0$ generates free charge carriers from light [2]. The plate is exposed to a constant light source so that the charge density $q(0,t)$ is held constant at C. On the rightmost end ($x = L$), a metal plate connected to a circuit that loops back to the other side of the solar cell forces the charge density at $x = L$ to be $q(L,t) = 0$ at all times.

Our goal is to understand what happens for the rest of $q(x,t)$ for $0 < x < L$.

To do so, we need to understand the dynamics that govern the behavior of charge density in the middle of this material. Physically, what is going on? What's happening is that the free charge carriers are just wandering around randomly in the material. In our simplified toy model here, they have no reason to prefer moving right or left and any individual free charge carrier is just as likely to move in one direction as the other. Such random motion is called diffusion. How can we translate this into a differential equation with some predictive power?

To understand this, let's see what happens in the hypothetical small box between lengths $x = s$ and $x = s + ds$ at time t. It turns out that an important quantity that we would like to understand is the *gradient* $g(x,t)$ of charge density at position x at time t,

$$g(x,t) = \frac{d}{dx} q(x,t). \tag{3}$$

Due to the nature of random motion, in a small time dt, the amount of charge flowing into the box from the left $x = s$ side is equal to $-K \cdot g(s,t) \cdot dt$. Here, the constant K depends on various physical constraints. You can think of it as how freely the free charge carriers are allowed to run around in the material. (Why the minus sign? Because the random flow of charge opposes the gradient of charge density — it wants to make things more level. Think of shaking a pile of sand, it will want to become less uneven by randomly flowing down the pile, not up the pile.) Meanwhile, the amount of charge entering the box from the right side $x = s + ds$ is equal to $K \cdot g(s + ds, t) \cdot dt$. Hence, the change in the amount of charge that the small box gets is equal to

$$\big(-K \cdot g(s,t) \cdot dt\big) + \big(K \cdot g(s + ds, t) \cdot dt\big) \approx K \cdot \left(\frac{d}{dx} g(x,t)|_{x=s} \right) \cdot ds \cdot dt.$$

[2] An example is an appropriate PN junction for a solar cell. Take 130 and/or 134 for more information!

On the other hand, in a small amount of time dt, the change in the amount of charge in the box is also $\left(\frac{d}{dt}q(x,t)|_{x=s}\right)\cdot dt\cdot ds$. These must be the same, and so we can equate the two expressions to get:

$$K\cdot\left(\frac{d}{dx}g(x,t)|_{x=s}\right)=\frac{d}{dt}q(x,t)|_{x=s}.$$

Since this holds for all s and all times t, it follows that

$$\frac{d}{dt}q(x,t)=K\frac{d}{dx}g(x,t) \tag{4}$$

for some constant K that depends on the material and other physics constants.

As we can see, our knowledge of differential equations allows us to write down such a model. Equation (4) is sometimes referred to as the *heat equation* since it also models heat flow. (The role of the charge density is played by the temperature.)

In this problem, we are only interested in the steady-state case, i.e., we are going to assume that $q(x,t)$ does not change over time. That implies $\frac{d}{dt}q(x,t)=0$ and using that, we can simplify our expression of $q(x,t)$ and write it as $q(x)$. Consequently, we can also simplify $g(x,t)$ to $g(x)$. Now, solving Equations (3) and (4) is equivalent to solving something we are familiar with:

$$\frac{d}{dx}q(x)=g(x), \tag{5}$$

$$\frac{d}{dx}g(x)=0. \tag{6}$$

This is a system of differential equations of the type we know how to handle. So let's solve for both $q(x)$ and $g(x)$ from Equations (5) and (6).

(a) **Write out the differential equation in matrix/vector form:**

$$\frac{d}{dx}\begin{bmatrix} q(x) \\ g(x) \end{bmatrix}=\underbrace{\begin{bmatrix} ? & ? \\ ? & ? \end{bmatrix}}_{A}\cdot\begin{bmatrix} q(x) \\ g(x) \end{bmatrix}$$

Here, the "?" in the expression above simply represent the entries of the A matrix. That's what you need to fill in.

(b) **Find the eigenvalues and eigenvectors of A.**

(c) Assume that we know both $q(0)$ and $g(0)$. **Solve for $q(x)$ and $g(x)$ in terms of these initial conditions.** *(Hint: think about what you did for the critically damped case for the RLC circuit.)*

(d) The challenge is that the physical story does not tell us anything immediately about $g(0)$. Instead, we just know about the free carrier density at both endpoints. **Solve for $q(x)$ and $g(x)$ with boundary conditions $q(0)=C$ and $q(L)=0$ instead.**

(Hint: If you knew $g(0)$, what would $q(L)$ be in terms of $q(0)$ and $g(0)$? But you know $q(L)$ so what does that imply?)

(e) The gradient $g(L)$ is related to the current flowing from the wire into the metal plate. **What is $g(L)$?**

(f) The above is an extremely simplified model of what happens in a solar cell. To be more realistic, you could also model the random recombination of free charge carriers within the medium itself. This recombination is proportional to the local density of free charge carriers themselves and thus modifies (4) to instead be $\frac{d}{dt}q(x,t) = K\frac{d}{dx}g(x,t) - K_2 q(x,t)$. Because we still want $\frac{d}{dt}q(x,t) = 0$, this changes (6) to be $\frac{d}{dx}g(x) = \frac{K_2}{K}q(x)$ where $K_2 > 0$ is another physical constant that depends on the material. **What is your solution for $q(x)$ in this case?**

(HINT: It is convenient here to avoid having to calculate the eigenvectors at all. You know that the solution will have two terms to it — one corresponding to each of the distinct eigenvalues. Just get the eigenvalues and then fit to the boundary conditions.)

9. Op-Amp Integrators: A continuation from the previous HW (PRACTICE)

In this question we will continue on from our analysis in Homework 2 and look at the eigenvalues of the integrator circuit (refer to Figure 5) in both non-ideal and ideal situations.

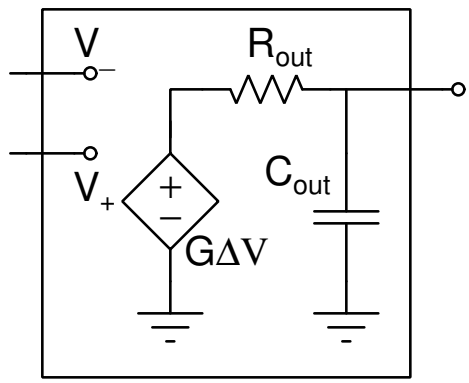

Figure 3: Op-amp model: $\Delta V = V_+ - V_-$

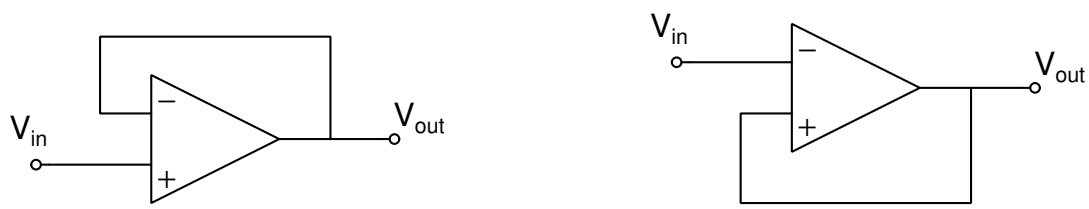

a Buffer in negative feedback

b "Buffer" in positive feedback that doesn't actually work as a buffer.

Figure 4: Op-amp in buffer configuration

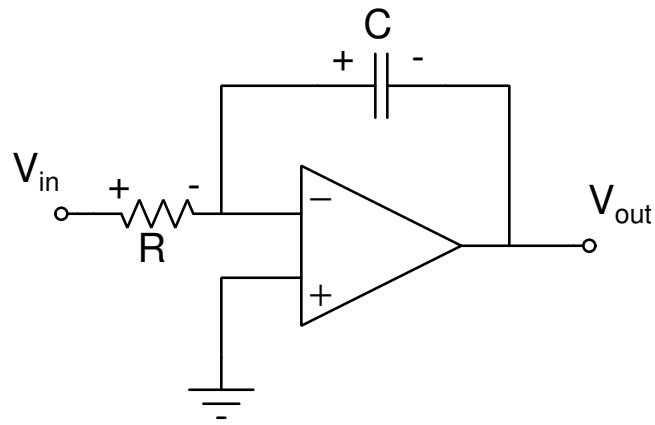

Figure 5: Integrator circuit

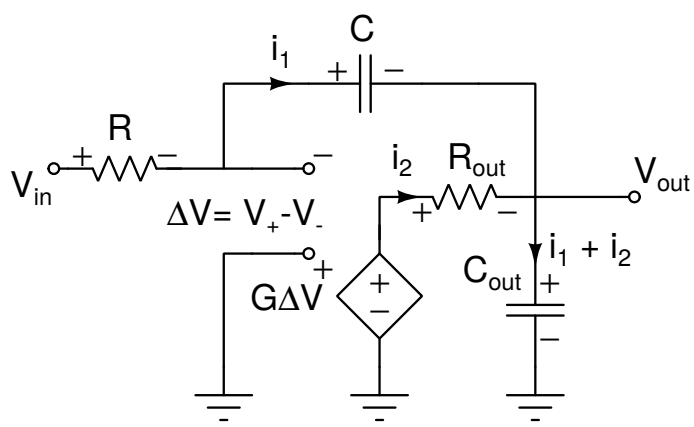

Figure 6: Integrator circuit with Op-amp model

(a) Recall from Homework 2 we had the following analysis to the integrator circuit shown in Figure 6.

$$\frac{d}{dt}\begin{bmatrix} V_{out} \\ V_C \end{bmatrix} = \begin{bmatrix} -\left(\frac{G+1}{R_{out}C_{out}} + \frac{1}{RC_{out}}\right) & -\left(\frac{1}{RC_{out}} + \frac{G}{R_{out}C_{out}}\right) \\ -\frac{1}{RC} & -\frac{1}{RC} \end{bmatrix} \begin{bmatrix} V_{out} \\ V_C \end{bmatrix} + \begin{bmatrix} \frac{1}{RC_{out}} \\ \frac{1}{RC} \end{bmatrix} V_{in} \tag{7}$$

Solve for the eigenvalues for the matrix/vector differential equation in Eq. (7).

For simplicity, assume $C_{out} = C = 0.01F$ and $R = 1\Omega$ and looking at the datasheet for the TI LMC6482 (the op-amps used in lab), we have $G = 10^6$ and $R_{out} = 100\Omega$.

Feel free to assume $G + 1 \approx 10^6$ when you finally need to plug in values, but do not make any other approximations. (Of course, such an approximation is not valid if you have a $G + 1 - G$ term showing up somewhere.) Feel free to use a scientific calculator or Jupyter to find the eigenvalues.

You should see that one eigenvalue corresponds to a slowly dying exponential and is close to 0. The other corresponds to a much faster dying exponential. The very slowly dying exponential is what corresponds to the desired integrator-like behavior. This is what lets it "remember." (If you don't understand why, think back to the HW problem you saw in a previous HW where you proved the uniqueness of the integral-based solution to a scalar differential equation with an input waveform.)

(b) Again, assume we have an ideal op-amp, *i.e.*, $G \to \infty$. **Find the eigenvalues under this limit.** Feel free to make any reasonable approximations.

Here, you should see that the eigenvalue that used to be a slowly dying exponential stops dying out at all — corresponding to the ideal integrator's behavior of remembering forever.

10. Write Your Own Question And Provide a Thorough Solution.

Writing your own problems is a very important way to really learn material. The famous "Bloom's Taxonomy" that lists the levels of learning is: Remember, Understand, Apply, Analyze, Evaluate, and Create. Using what you know to create is the top level. We rarely ask you any homework questions about the lowest level of straight-up remembering, expecting you to be able to do that yourself (e.g. making flashcards). But we don't want the same to be true about the highest level. As a practical matter, having some practice at trying to create problems helps you study for exams much better than simply counting on solving existing practice problems. This is because thinking about how to create an interesting problem forces you to really look at the material from the perspective of those who are going to create the exams. Besides, this is fun. If you want to make a boring problem, go ahead. That is your prerogative. But it is more fun to really engage with the material, discover something interesting, and then come up with a problem that walks others down a journey that lets them share your discovery. You don't have to achieve this every week. But unless you try every week, it probably won't ever happen.

11. Homework Process and Study Group

Citing sources and collaborators are an important part of life, including being a student! We also want to understand what resources you find helpful and how much time homework is taking, so we can change things in the future if possible.

(a) **What sources (if any) did you use as you worked through the homework?**

(b) **Who did you work on this homework with?** List names and student ID's. (In case of homework party, you can also just describe the group.)

(c) **How did you work on this homework?** (For example, *I first worked by myself for 2 hours, but got stuck on problem 3, so I went to office hours. Then I went to homework party for a few hours, where I finished the homework.*)

(d) **Roughly how many total hours did you work on this homework?**

Contributors:

- Anant Sahai.
- Jaijeet Roychowdhury.
- Sanjeet Batra.
- Aditya Arun.
- Alex Devonport.
- Regina Eckert.
- Kuan-Yun Lee.
- Siddharth Iyer.
- Sayeef Salahuddin.

