EE16B: DESIGNING INFORMATION DEVICES AND SYSTEMS II

LECTURE NOTES

Resonant Circuits and MEMS

Consider the equivalent circuit of a crystal oscillator:

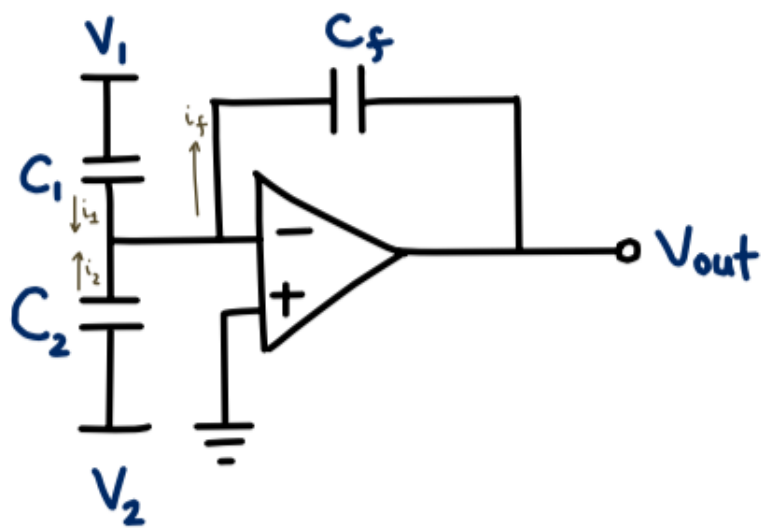

We want to express the output voltage as a function of the input voltage. We can say that:

$$i_1 + i_2 = i_f$$

This equation can be expressed in terms of voltages and capacitances:

$$\frac{V_1}{\frac{1}{j\omega c_1}} + \frac{V_2}{\frac{1}{j\omega c_2}} = \frac{-V_{out}}{\frac{-1}{j\omega c_f}}$$

$$\longrightarrow -\left(\frac{C_1}{C_f}V_1 + \frac{C_2}{C_f}V_2\right) = V_{out}$$

Date: April 15, 2016.

If we say that some C_o is the average of C_1 and C_2, then,

$$C_1 = C_o + \Delta C$$
$$C_2 = C_o - \Delta C$$

Our equation for V_{out} then becomes:

$$-\frac{(C_o + \Delta C)}{C_f} V_1 - \frac{(C_o - \Delta C)}{C_f} V_2 = V_{out}$$
$$\longrightarrow -\frac{C_o}{C_f} V_1 - \frac{\Delta C}{C_f} V_1 - \frac{C_o}{C_f} V_2 + \frac{\Delta C}{C_f} V_2 = V_{out}$$

If we choose $V_1 = -V_2$ and say that this voltage is V_{in}, then the first and third terms cancel each other out, so then the equation for V_{out} becomes:

$$V_{out} = -\frac{2V_{in}}{C_f} \Delta C$$