EE16B Lecture 2

Tuesday, August 9, 2016 1:00 PM

Now that we know how simple CMOS gates operate, we could ask many questions:

- how fast do they switch?
- how much energy do they consume when switching (or even when <u>not</u> switching)?
- how much space do they take up?

We can tackle the first question, but first, a review.

IIa. Capacitors

Any time we have two conductors separated by a dielectric (i.e. an insulator), we have the potential to separate charge across the two conductors.

This: 1) is called a capacitance (the device is a capacitor)
2) phenomenon stores energy

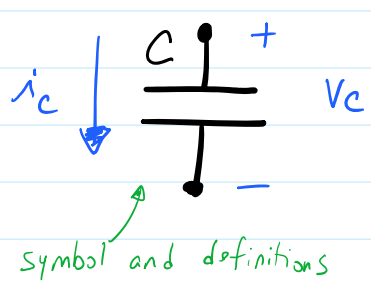

The following is always true:

1) $i_c(t) = C \dfrac{dv(t)}{dt}$ [Amps]

2) $v_c(t)$ can never change instantly (i.e. it

can never be discontinuous). To see why, examine 1). If $v_c(t)$ is discontinuous, then $\frac{dv_c}{dt} \to \infty$ at the discontinuity and $i_c \to \infty$.

3) The energy stored in a capacitor at any instant in time is

$$U = \frac{1}{2} C v_c^2(t) \qquad [\text{Joules}]$$

IIb. Capacitances and transistors

It turns out that whenever we make a transistor, there are <u>always</u> capacitances associated with the nodes. This is unavoidable and largely unwanted and arises from solid state physics.

In this class, we will model those capacitances as a single capacitor between V_{out} and GND.

This is a simple model, but it works surprisingly well.

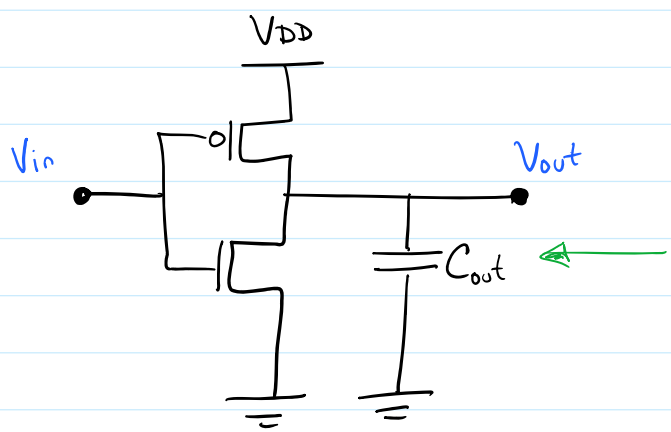

We are not telling you how you calculate what C_{out} is if given transistors, that is for another semester. We just "lump" all capacitive effects into one C_{out}.

IIc. The RC circuit

- Let's look at the inverter more carefully now.

- Let's assume $V_{in} = 0$ and thus $V_{out} = V_{DD}$ and the transistor has been in this condition a long time (since $t = -\infty$).

- Now, at $t=0$, we instantly switch V_{in} to V_{DD}. We know, eventually, $V_{out} = 0$. If there were no C, the output would change instantly because the equations have no concept of time. But with a C, things slow down. Let's see why.

- For $t>0$

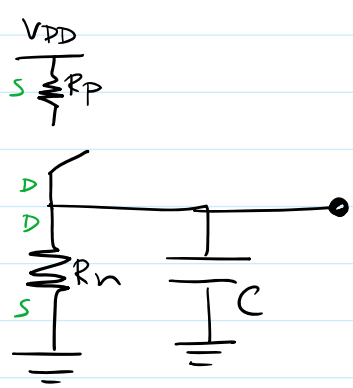

PMOS is off so let's ignore it $\Longrightarrow$

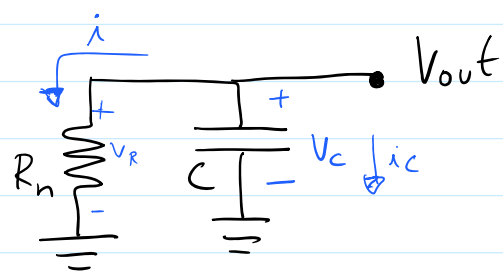

Notice $v_c(t) = V_{out}(t)$ and $i = -i_c = -C\dfrac{dv_c}{dt}$

this is from the definition of C's above

Use KVL:

$$v_c = v_R$$

$$v_c - v_R = 0$$

$$v_c - iR = 0$$

$$v_c - \left(-C\frac{dv_c}{dt}\right)R = 0$$

$$V_c + RC\frac{dv_c}{dt} = 0$$

664128293

equivalently:

$$\boxed{V_{out} + RC\frac{dv_{out}}{dt} = 0}$$

This is a <u>first order differential equation</u>.

The general form is

$$\frac{dx}{dt} + ax = 0$$

Because, in this form, the R.H.S. $= 0$, it is a homogenous 1st order D.E.

(I sometimes use a shorthand whereby $\frac{dx}{dt} = \dot{x}$ and $\frac{d^2x}{dt^2} = \ddot{x}$ and so on.)

$$\boxed{\dot{V}_{out} + \frac{V_{out}}{RC} = 0}$$

IMPORTANT!!!

You will discuss how to solve this class of equations in <u>DISCUSSION</u> using linear algebra concepts. Learn the method!!!

linear algebra concepts. Learn the method!!!

The solution to $\frac{dV_{out}}{dt} + \frac{V_{out}}{RC} = 0$

for $t > 0$ is

$$V_{out}(t) = V_{out}(0)\, e^{-t/RC}$$

This is also called τ (tau). $\tau = RC$ and determines how fast the exponential decays

this is the voltage across C at $t=0$. Remember, for $t<0$, $V_{out} = V_{DD}$ and the voltage across a capacitor can never change instantly. Thus,

$$V_{out}(0) = V_{DD}$$

For our transistor problem, then:

$$V_{out}(t) = V_{DD}\, e^{-t/\tau} \quad \text{where } \tau = RC$$

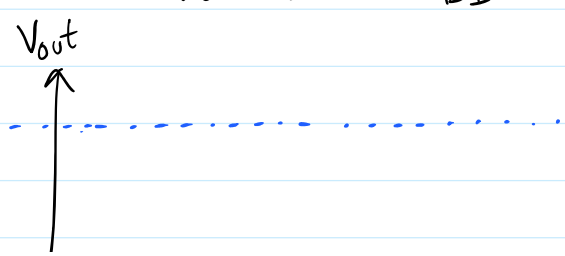

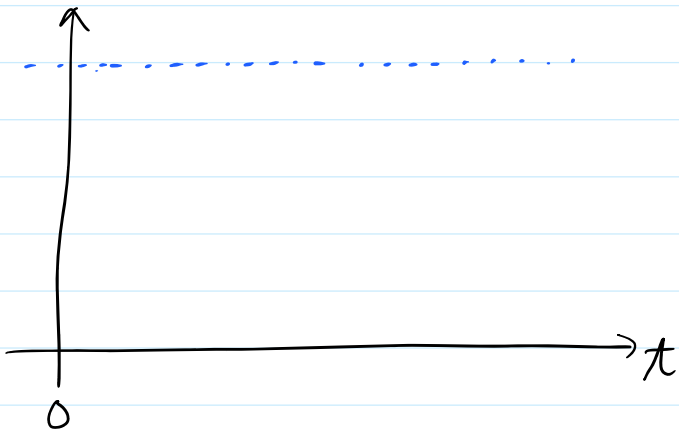

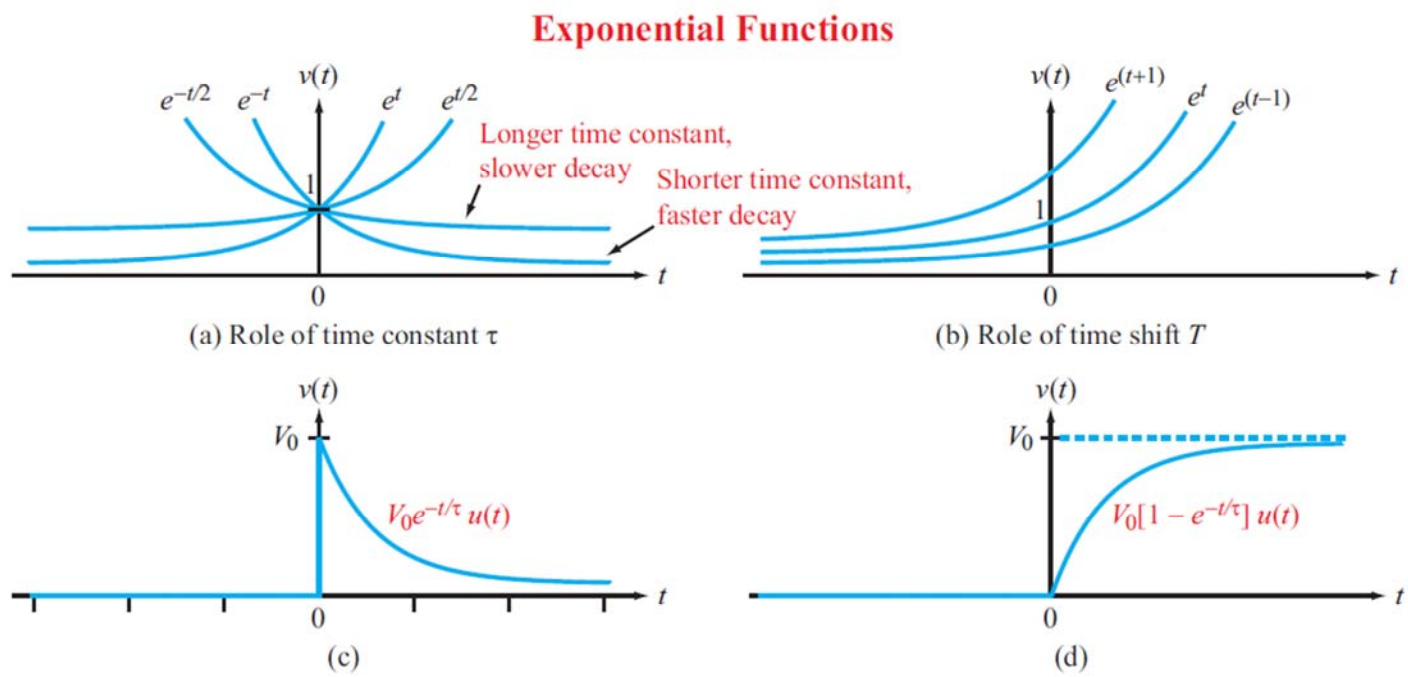

II d. Natural Response of a Charged Capacitor

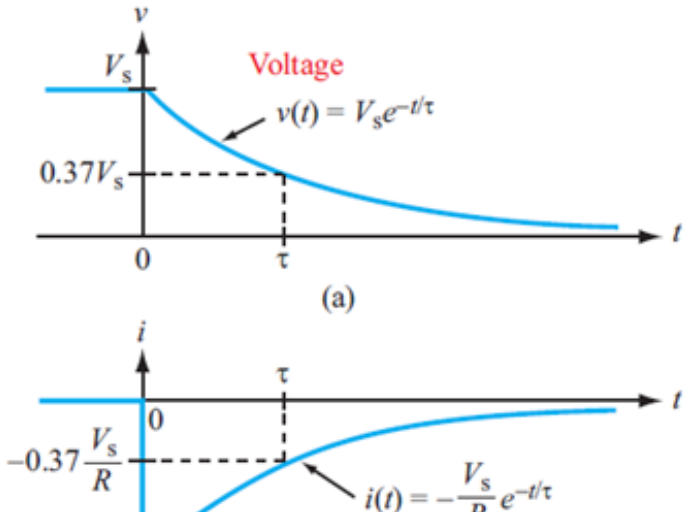

$$i(t) = C\frac{dv}{dt} = C\frac{d}{dt}\left(V_s e^{-t/\tau}\right)$$

$$= -C\frac{V_s}{\tau} e^{-t/\tau}$$

$$\boxed{= \frac{-V_s}{R} e^{-t/\tau} \quad (t>0)}$$

$$i(t) = \cdots = -\left(-V_s \; {}^{-t/\tau}\right)\left(V_s \; {}^{-t/\tau}\right)$$

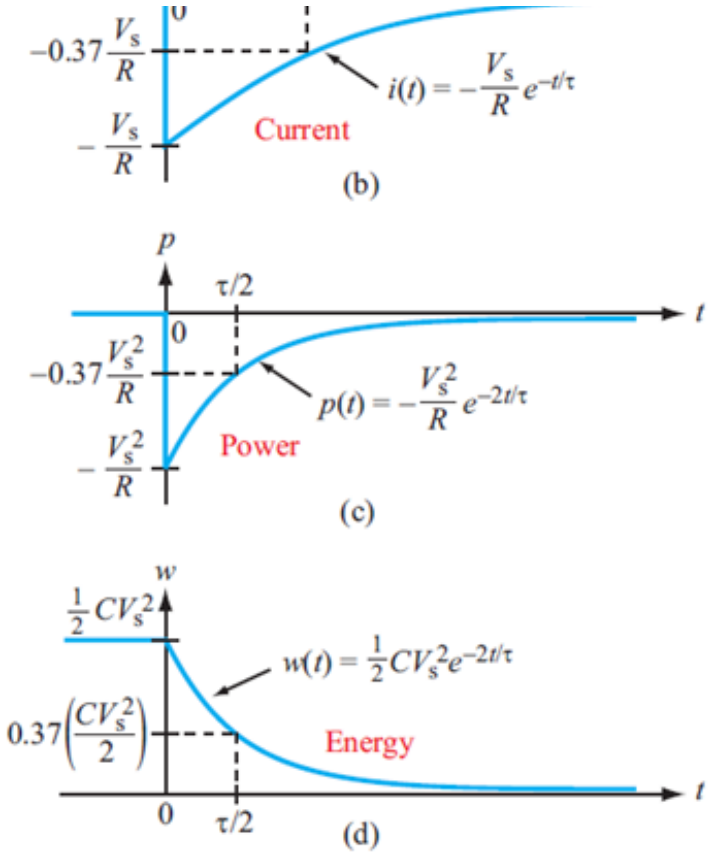

$$p(t) = iv = \left(\frac{-V_s}{R}e^{-t/\tau}\right)\left(V_s e^{-t/\tau}\right)$$

$$\boxed{= \frac{-V_s^2}{R}e^{-2t/\tau}}$$

$$w(t) = \frac{1}{2}C\,V(t)^2$$

$$\boxed{= \frac{1}{2}C\,V_s^2 \cdot e^{-2t/\tau}}$$

II e. What about a general solution for RC circuits w/ DC sources?

This is the case we saw:

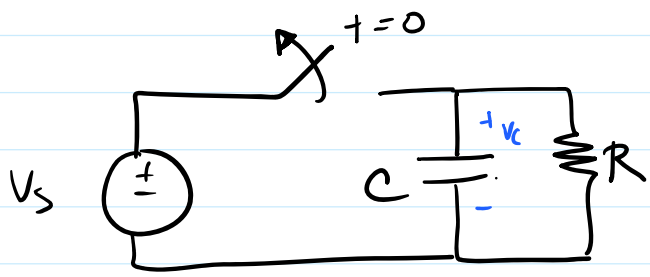

for $t \geq 0$:

$$V_c + RC\frac{dv_c}{dt} = 0$$

$$v_c(t) = V_s e^{-t/\tau}$$

Consider this:

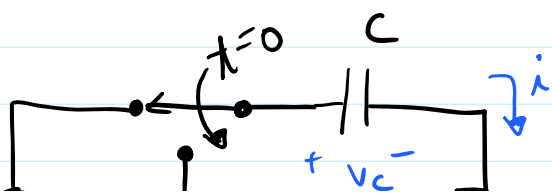

$$V_c(0) = V_{S1}$$

KVL for $t > 0$

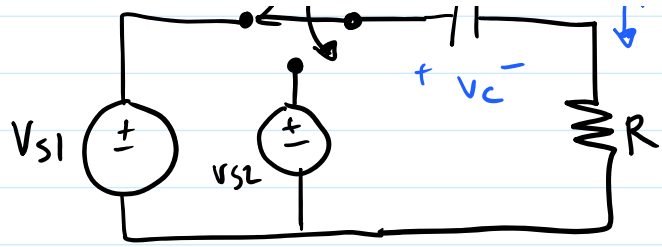

KVL for $t > 0$

$$-V_{S2} + iR + v_c = 0$$

$$i = C\frac{dv_c}{dt}$$

$$-V_{S2} + RC\frac{dv_c}{dt} + v_c = 0$$

$$v_c + RC\frac{dv_c}{dt} = V_{S2}$$

$$\boxed{\frac{dv_c}{dt} + \frac{v_c}{RC} = \frac{V_{S2}}{RC}}$$

general form of the inhomogenous ODE

$$\boxed{\dot{v}_c + a v_c = b}$$

$$a = \frac{1}{RC} \qquad b = \frac{V_{S2}}{RC}$$

What is the solution to this general ODE?

Two ways to write the solution:

I. $$\boxed{v_c(t) = v_c(0)\, e^{-t/RC} + \frac{b}{a}\left(1 - e^{-t/RC}\right)}$$

this is the decaying exponential of the initial voltage "discharging"

this is the exponential of the capacitor charging up to V_{S2}

Note that $\frac{b}{a} = V_{s2} = v_c(\infty)$

Notice that at $t \to \infty$, the capacitor will look like an open (because there is only a DC source) so by KVL $v_c(\infty) = V_{s2}$

In other words, the solution is the linear superposition of the initial charge of the capacitor discharging and the V_{s2} supply charging up to V_{s2}.

$V_{s2}(1 - e^{-t/RC})$ looks like

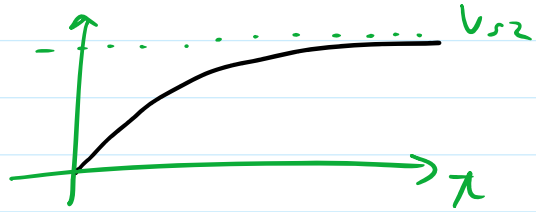

$$\text{II.} \quad \boxed{v_c(t) = v_c(\infty) + \left[v(0) - v(\infty)\right] e^{-t/RC}}$$

This is equivalent to I. but is often faster to write if you know $v_c(0)$, $v_c(\infty)$ and RC.

All three of these are sometimes discoverable by inspection.

Just to be complete with terminology $\Rightarrow$

$v_c(\infty)$ is the <u>steady state</u>

and

$\left[v(0) - v(\infty)\right] e^{-t/RC}$ is the <u>transient</u>

transient