Discussion 1B

1. Linear Algebra Review

For the following matrices, find the following properties:

i. **What is the column space of the matrix?**

ii. **What is the null space of the matrix?**

iii. **What are the eigenvalues and corresponding eigenspaces for the matrix?**

(a) $\begin{bmatrix} 2 & 4 \\ 0 & 3 \end{bmatrix}$

Solution:

i. $\mathbb{R}^2$. Inspection: the columns of the matrix cannot be written as multiples of each other, so they are linearly independent. Since these vectors are in $\mathbb{R}^2$ and there are 2 linearly independent vectors, these are enough to span $\mathbb{R}^2$, which must then be the column space.

ii. $\{\vec{0}\}$. The linear independence of the columns also implies $\{\vec{0}\}$ as the solution set of $A\vec{x} = \vec{0}$ where A is the matrix, and thus the null space is $\{\vec{0}\}$.

iii. $\lambda_1 = 2$ has the corresponding eigenspace: $\text{Span}\left(\begin{bmatrix} 1 \\ 0 \end{bmatrix}\right)$

$\lambda_2 = 3$ has the corresponding eigenspace: $\text{Span}\left(\begin{bmatrix} 4 \\ 1 \end{bmatrix}\right)$

(b) $\begin{bmatrix} 1 & -2 \\ 2 & -4 \end{bmatrix}$.

Solution:

i. $\text{Span}\left(\begin{bmatrix} 1 \\ 2 \end{bmatrix}\right)$. If proceeding by inspection, note that the matrix columns are multiples, so their span is equivalent to the span of one column. Note that it does not matter which column is chosen. Thus the column space can be written as the span of one column from the matrix.

ii. $\text{Span}\left(\begin{bmatrix} 2 \\ 1 \end{bmatrix}\right)$. Since the columns are integer multiples of each other, a solution to $A\vec{x} = \vec{0}$ can be constructed, and then extrapolated to the null space.

iii. $\lambda_1 = -3$ has the corresponding eigenspace: $\text{Span}\left(\begin{bmatrix} \frac{1}{2} \\ 1 \end{bmatrix}\right)$

$\lambda_2 = 0$ has the corresponding eigenspace: $\text{Span}\left(\begin{bmatrix} 2 \\ 1 \end{bmatrix}\right)$

2. KVL/KCL Review

Use Kirchhoff's Laws on the circuit below to find V_x in terms of $V_{\text{in}}, R_1, R_2, R_3$.

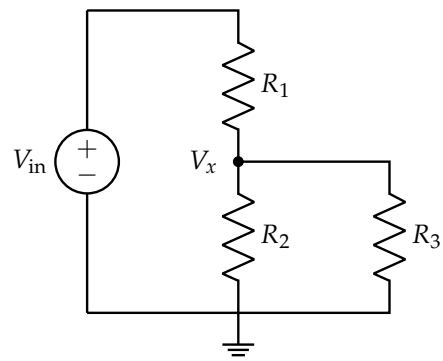

Figure 1: Example Circuit

(a) Recall Node Voltage Analysis (NVA). Determine V_x by labeling the circuit and writing equations to solve a system of equations in node voltages.

Solution:

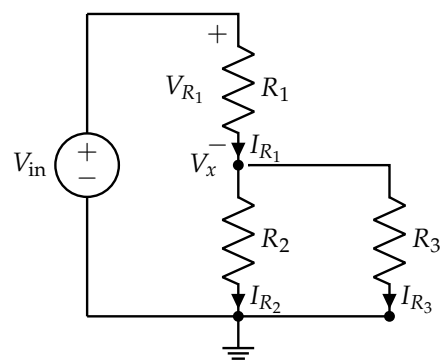

Figure 2

Applying KCL to the node at V_x, we get

$$\frac{V_{\text{in}} - V_x}{R_1} - \frac{V_x - 0}{R_2} - \frac{V_x - 0}{R_3} = 0 \tag{1}$$

Solving this equation for V_x yields

$$V_x = V_{\text{in}} \frac{R_2 R_3}{R_1 R_2 + R_1 R_3 + R_2 R_3} \tag{2}$$

(b) In EECS16A, you learned you can simplify analysis by replacing series or parallel resistors with equivalents and memorizing common circuit design blocks. Determine V_x by leveraging resistor equivalence and recognition of a design block.

Solution: Observe that R_2 and R_3 are in parallel. We can replace them with a single resistor of value $R_{\text{eq}} = R_2 \parallel R_3 = \frac{R_2 R_3}{R_2 + R_3}$ in between the ground and the node with node voltage V_x.

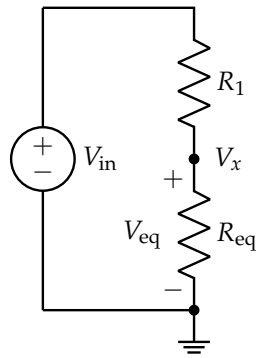

Figure 3

This circuit is a voltage divider. We can determine V_{eq} as a function of the resistances and the source, then relate V_x to V_{eq}.

$$V_{\text{eq}} = \frac{R_{\text{eq}}}{R_1 + R_{\text{eq}}} V_{\text{in}} \tag{3}$$

$$V_{\text{eq}} = V_x - 0 \tag{4}$$

$$V_x = \frac{\frac{R_2 R_3}{R_2 + R_3}}{R_1 + \frac{R_2 R_3}{R_2 + R_3}} V_{\text{in}} \tag{5}$$

$$V_x = \frac{R_2 R_3}{R_1 R_2 + R_1 R_3 + R_2 R_3} V_{\text{in}} \tag{6}$$

(c) As a check, as $R_3 \to \infty$, what is V_x for what you found in (a) and (b)? The V_x's of each part should approach the same value. What is the name we used for this type of circuit?

Solution: The expressions we show above for (a) and (b) are identical. However, if they do not appear identical without simplification, the limit can be a way to verify that both solution methods inform us of the correct circuit behavior and are consistent with each other. As $R_3 \to \infty$, the $R_1 R_2$ term on the denominator will become insignificant, simplifying our expression.

$$\begin{aligned}
\lim_{R_3 \to \infty} V_x &= \lim_{R_3 \to \infty} V_{\text{in}} \frac{R_2 R_3}{R_1 R_2 + R_1 R_3 + R_2 R_3} \\
&= \lim_{R_3 \to \infty} V_{\text{in}} \frac{R_2}{\frac{R_1 R_2}{R_3} + R_1 + R_2} \\
&= V_{\text{in}} \frac{R_2}{R_1 + R_2}
\end{aligned}$$

When $R_3 \to \infty$, it effectively becomes an open circuit, which makes the rest of the circuit a resistive voltage divider.

3. Current Sources And Capacitors

(Adapted from EECS16A Fall 20 Disc 9A.)

(HINT: Recall charge has units of Coulombs. (C), and capacitance is measured in Farads. (F). Also, $1\,\mathrm{F} = \frac{1\,\mathrm{C}}{1\,\mathrm{V}}$*. It may also help to note metric prefix examples:* $3\,\mu\mathrm{F} = 3 \times 10^{-6}\mathrm{F}$*.)*

Given the circuit in fig. 4, **find an expression for** $v_{\text{out}}(t)$ **in terms of** I_S**,** C**,** V_0**, and** t, where V_0 is the initial capacitor voltage at $t = 0$.

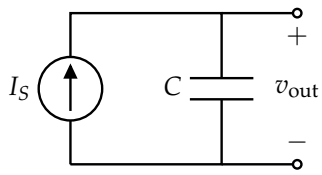

Figure 4: A current source attached to a capacitor.

Then **plot the function** $v_{\text{out}}(t)$ **over time on the graph below for each set of conditions, detailed below.**

Use the values $I_S = 1\,\mathrm{mA}$ and $C = 2\,\mu\mathrm{F}$.

(1) Capacitor is initially uncharged $V_0 = 0$ at $t = 0$.

(2) Capacitor has been charged with $V_0 = 1.5\,\mathrm{V}$ at $t = 0$.

(3) **(PRACTICE)** Swap this capacitor for one with half the capacitance $C = 1\,\mu\mathrm{F}$, which is initially uncharged $V_0 = 0$ at $t = 0$.

(HINT: Recall the calculus identity $\int_a^b f'(x)\,\mathrm{d}x = f(b) - f(a)$*, where* $f'(x) = \frac{\mathrm{d}f}{\mathrm{d}t}$*.)*

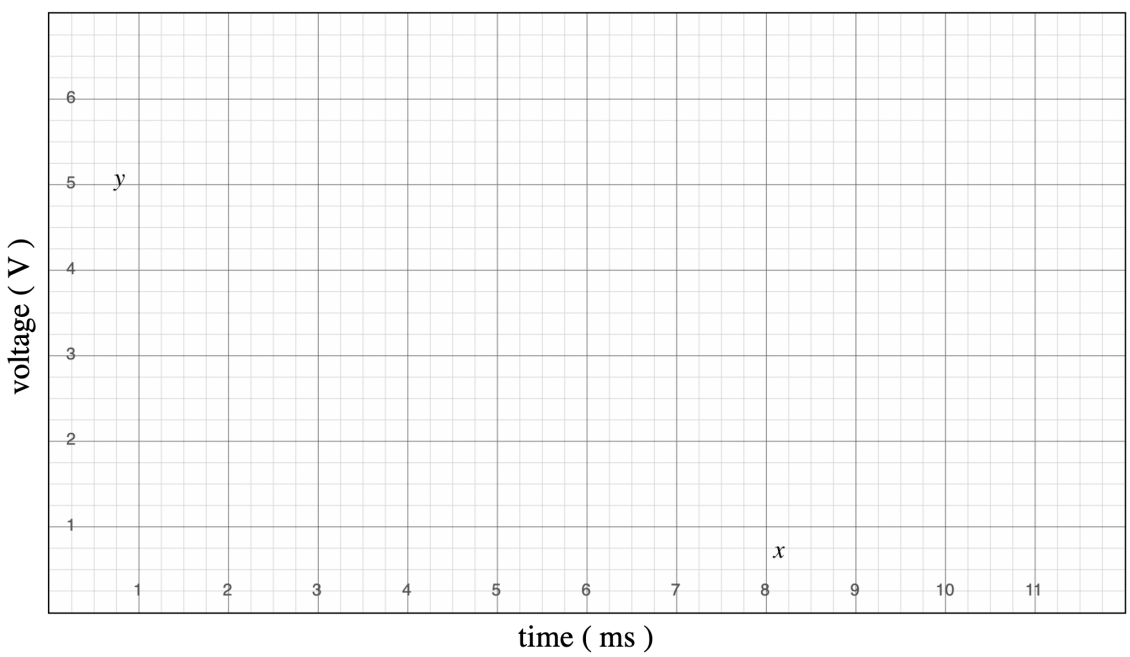

Solution: The key here is to exploit the capacitor equation by taking its time-derivative.

$$Q = Cv_{\text{out}} \longrightarrow \frac{\mathrm{d}Q}{\mathrm{d}t} \equiv I_C = I_s = C\frac{\mathrm{d}v_{\text{out}}}{\mathrm{d}t}. \tag{7}$$

From here we can rearrange and show that:

$$\frac{\mathrm{d}v_{\text{out}}}{\mathrm{d}t} = \frac{I_s}{C} \tag{8}$$

Thus the voltage has a constant slope!

Our solution is

$$v_{\text{out}}(t) = V_0 + \left(\frac{I_s}{C}\right)t \tag{9}$$

Formally, we are solving a differential equation that happens to return a linear function for $v_{\text{out}}(t)$:

$$\frac{\mathrm{d}v_{\text{out}}}{\mathrm{d}t} = \frac{I_s}{C} \tag{10}$$

$$\int_0^t \frac{\mathrm{d}v_{\text{out}}}{\mathrm{d}t}\,\mathrm{d}t = v_{\text{out}}(t) - v_{\text{out}}(0) \tag{11}$$

$$\int_0^t \frac{I_s}{C}\,\mathrm{d}t = \frac{I_s}{C}\int_0^t 1\,\mathrm{d}t \equiv \frac{I_s}{C}t \tag{12}$$

Thus we arrive at the same statement as seen earlier: $v_{\text{out}}(t) = v_{\text{out}}(0) + \left(\frac{I_s}{C}\right)t$.

From this stage we can compute the slope of $v_{\text{out}}(t)$ in each scenario.

$$\frac{I_s}{C} = \frac{1\,\text{mA}}{2\,\mu\text{F}} = \frac{1000\,\frac{\mu\text{C}}{\text{s}}}{2\,\frac{\mu\text{C}}{\text{V}}} = 500\,\frac{\text{V}}{\text{s}} = 0.5\,\frac{\text{V}}{\text{ms}} \tag{13}$$

For part (c):

$$\frac{I_s}{C} = \frac{1\text{mA}}{1\mu\text{F}} = \frac{1000\,\frac{\mu\text{C}}{\text{s}}}{1\,\frac{\mu\text{C}}{\text{V}}} = 1000\,\frac{\text{V}}{\text{s}} = 1\,\frac{\text{V}}{\text{ms}} \tag{14}$$

When plotting, make sure to recall (a) and (c) start at the origin, while (b) has initially charged plates by $V_0 = 1.5V$. Results are shown below:

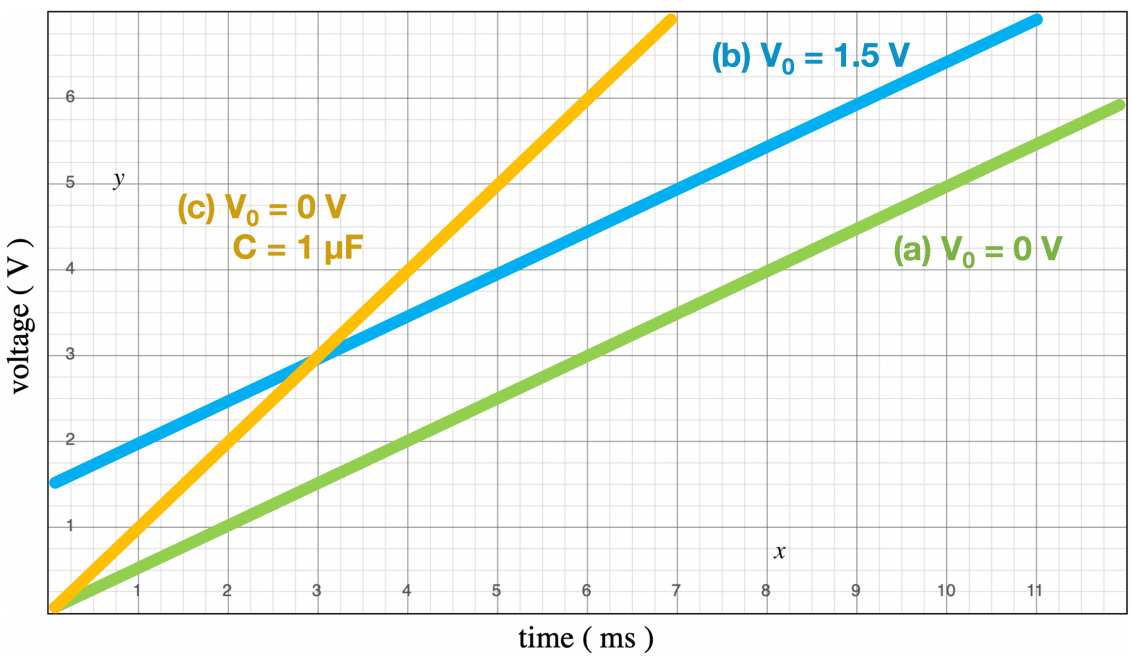

4. (OPTIONAL) Op-Amp Summer

Consider the following circuit (assume the op-amp is ideal):

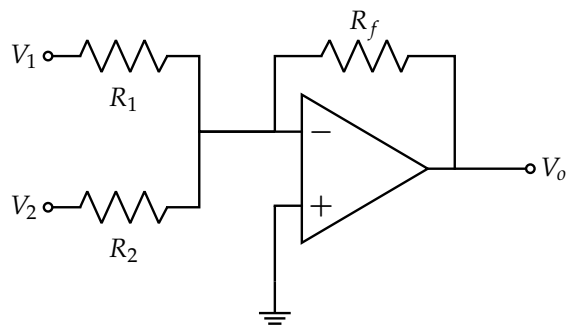

Figure 5: Op-amp Summer

What is the output V_o in terms of V_1 and V_2? You may assume that R_1, R_2, and R_f are known.

Solution:

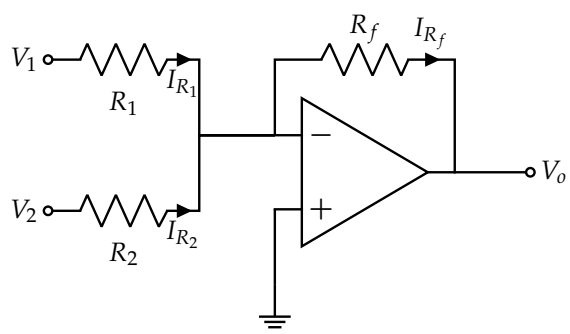

Figure 6

Let I_- be the current flowing into the (-) terminal of the op-amp

$$I_{R_f} + I_- = I_{R_1} + I_{R_2} \tag{15}$$

$$I_{R_f} + 0 = I_{R_1} + I_{R_2} \tag{16}$$

$$\frac{0V - V_o}{R_f} + 0A = \frac{V_1 - 0}{R_1} + \frac{V_2 - 0}{R_2} \tag{17}$$

$$V_o = -\left(\frac{R_f}{R_1} \cdot V_1 + \frac{R_f}{R_2} \cdot V_2\right) \tag{18}$$