EECS192 Lecture 1
Jan. 16, 2018

- What is Mechatronics?
- Project Description
- Autonomous system example
- Course Organization
- ARM Cortex M4 overview
- FreeRTOS
- Electronic Components

What is Mechatronics?

- Moore's Law for electronics
- Moore's Law for mechanics(?)

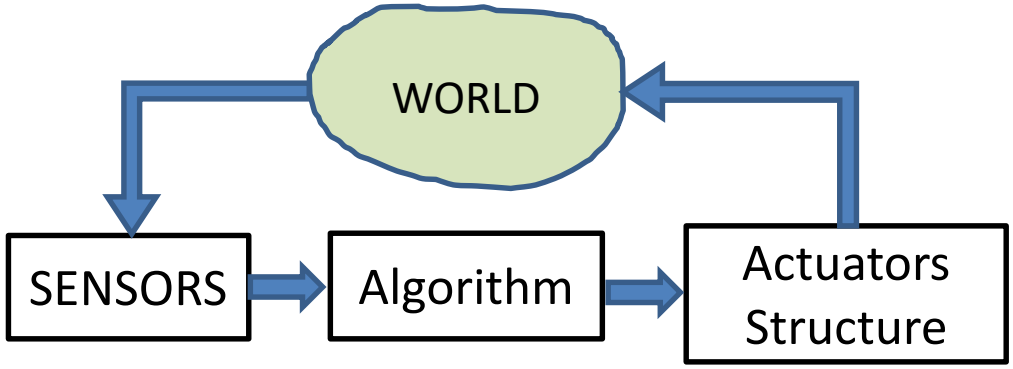

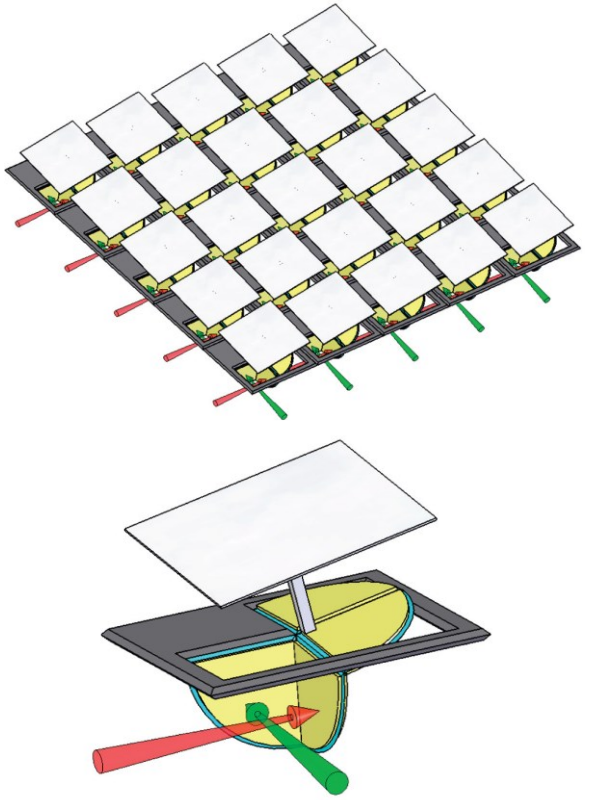

Folded mirror array

Key Technologies for Mechatronics:

- Signal processing
- Control
- …

Project Description

- Design Autonomous Race Car
- Unknown track
- Follow track without hitting cones.
- Stop at end of track.
- Winning speed: 3.3 m/sec (Spring 2017 Natcar winner)
- Learning allowed (though only have 5 minutes total for best run)

- Tues Lecture -> Wed/Thurs Lab Demo -> 8 days -> Fri checkoff hour (tba)

Hardware

Thrun et al Stanley 2005

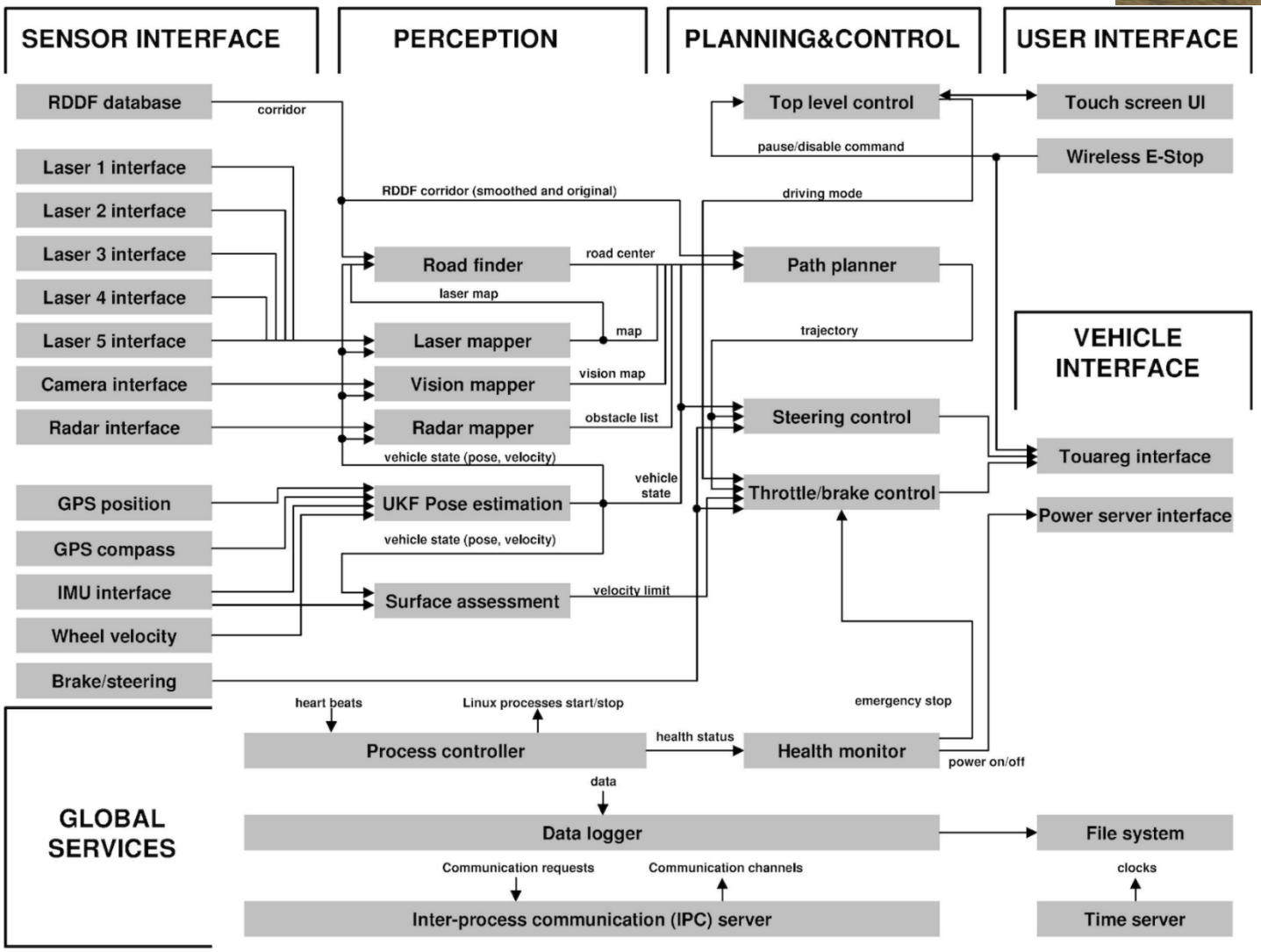

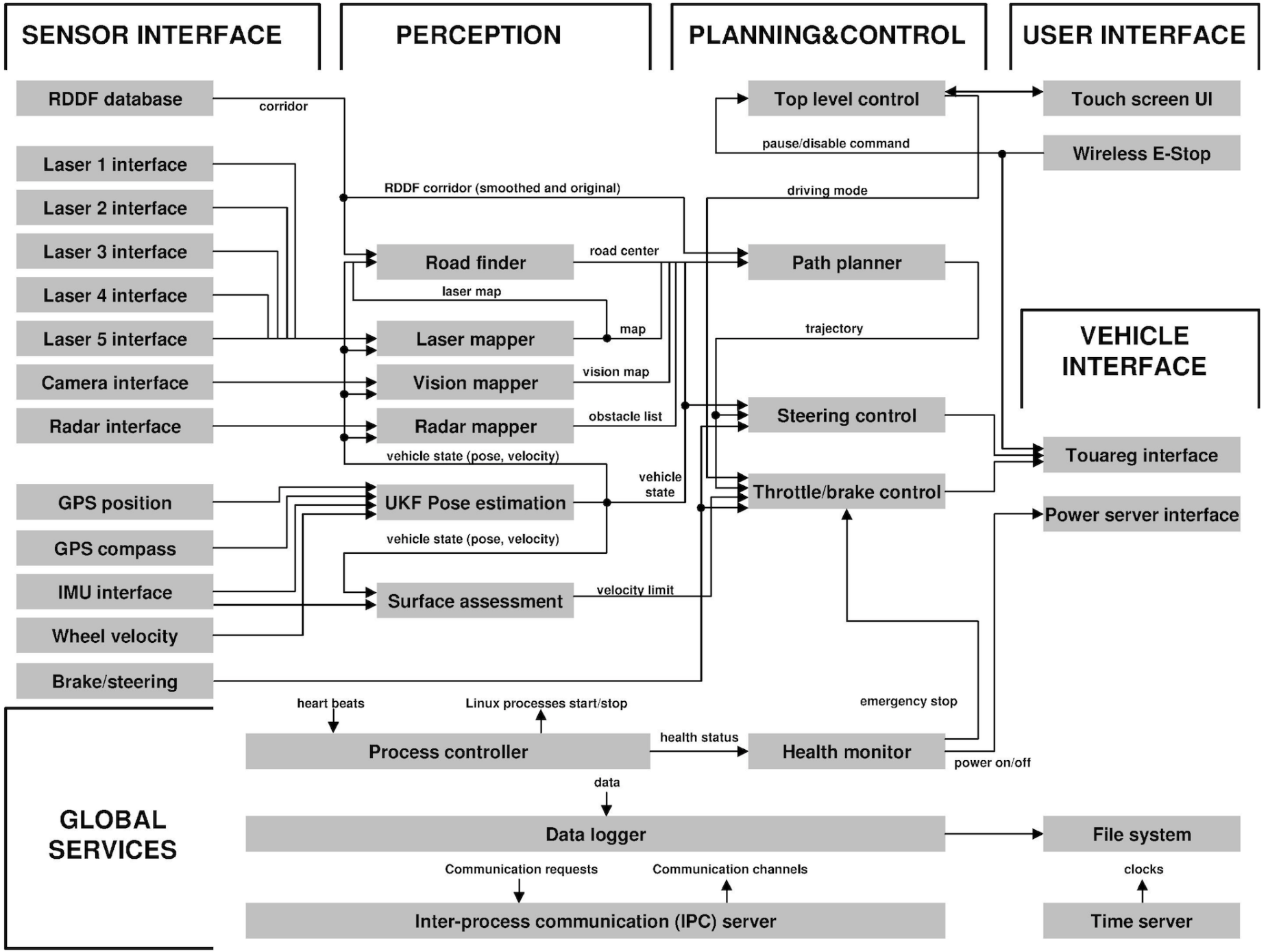
SENSOR INTERFACE
PERCEPTION
PLANNING&CONTROL
USER INTERFACE
RDDF database
corridor
Laser 1 interface
Laser 2 interface
Laser 3 interface
Laser 4 interface
Laser 5 interface
Camera interface
Radar interface
GPS position
GPS compass
IMU interface
Wheel velocity
Brake/steering
RDDF corridor (smoothed and original)
Road finder
road center
laser map
Laser mapper
map
Vision mapper
vision map
Radar mapper
obstacle list
vehicle state (pose, velocity)
UKF Pose estimation
vehicle state
vehicle state (pose, velocity)
Surface assessment
velocity limit
Top level control
pause/disable command
driving mode
Path planner
trajectory
Steering control
Throttle/brake control
Touch screen UI
Wireless E-Stop
VEHICLE INTERFACE
Touareg interface
Power server interface
emergency stop
power on/off
GLOBAL SERVICES
heart beats
Linux processes start/stop
Process controller
health status
Health monitor
data
Data logger
File system
Communication requests
Communication channels
clocks
Inter-process communication (IPC) server
Time server

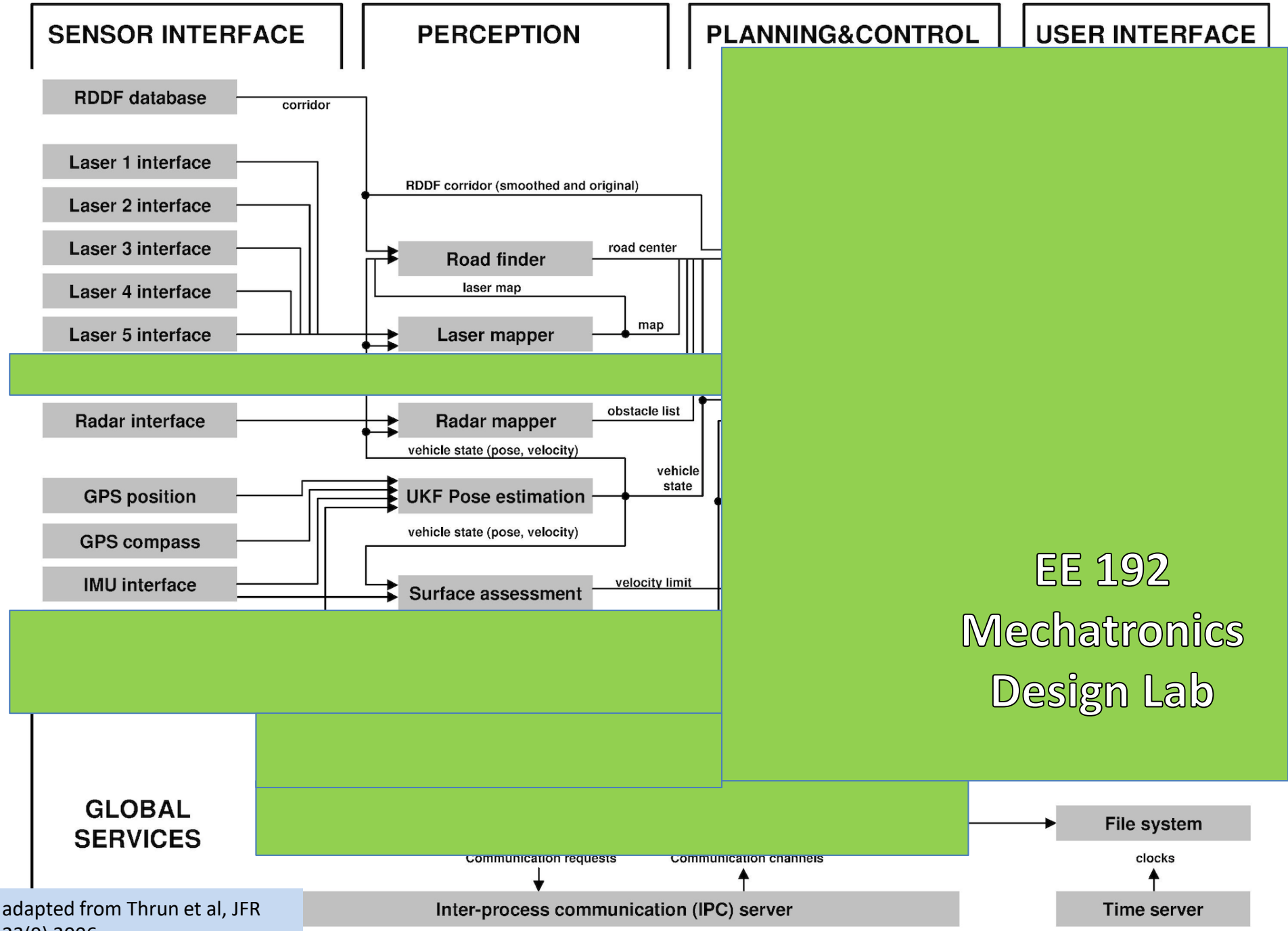

adapted from Thrun et al, JFR 23(9) 2006

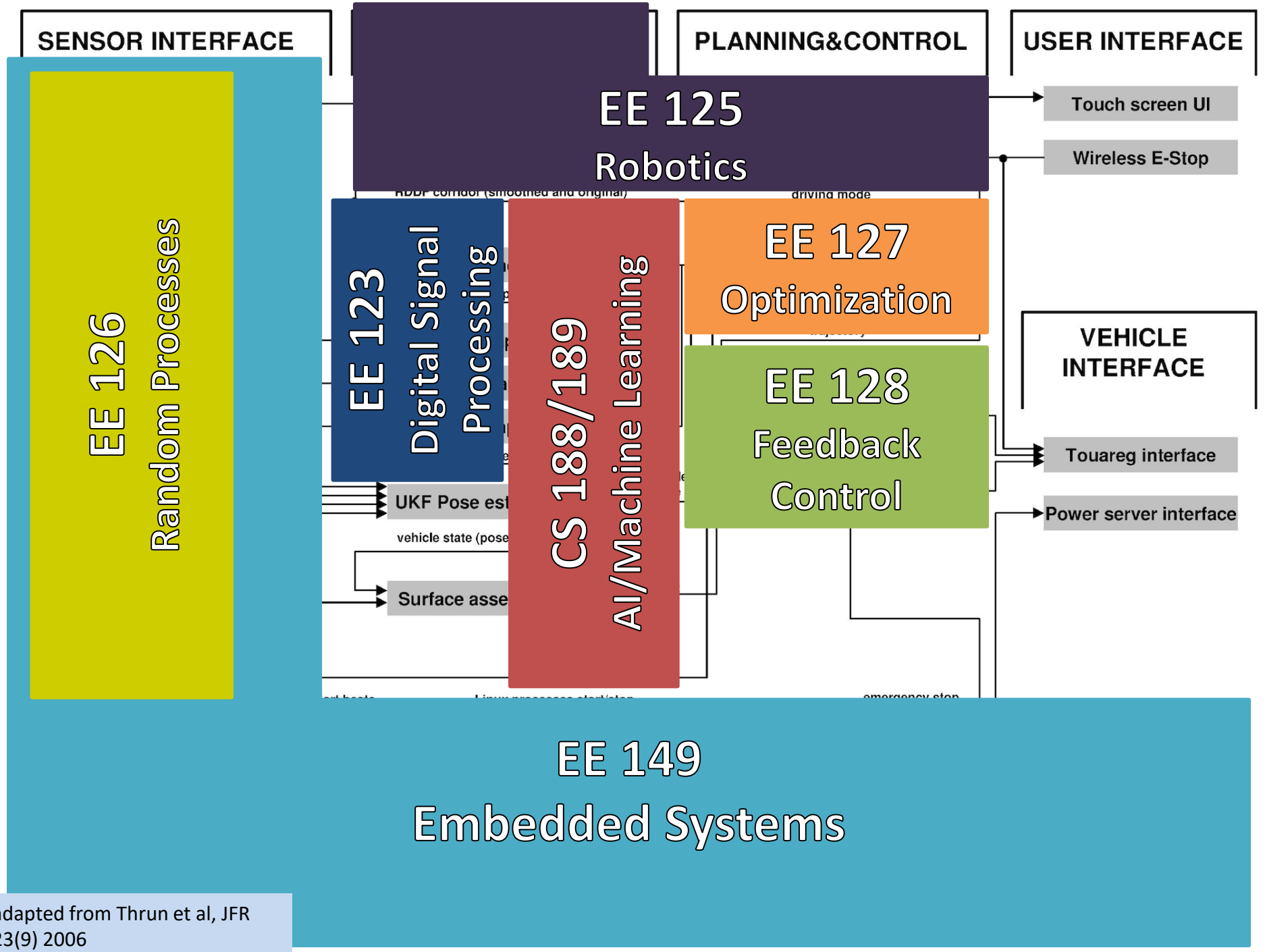

adapted from Thrun et al, JFR 23(9) 2006

Course Organization

- Tues Lecture -> Wed/Thurs Lab Demo -> 8 days -> Fri checkoff hour (tba)
- Partners: 3 ideal. Only have 12 teams, so priority to teams of 3. $300 deposit for car+CPU+battery+camera+motor+servo
- Checkoffs ``better is enemy of good''- robustness: needs to work in a window
- Checkpoint sequence:
- CPU -> drive motor+servo -> power supply -> line sense ->line follow/fig 8 -> velocity control -> CalDay/Round 1/Round2/NatCAR

Course Organization (cont)

- Emphasis: robustness, simplicity.
  Design/Simulate/Build/Test
- Goal: 10 hours per week per team member.

- What about Complexity?
- Reliability of the overall system $(90\%)^N$

(connectors, power supply, heat sinks, solder joints, CPU stack, car mechanics, camera mount, control stability, lighting robustness,…)

ARM Cortex M4 Overview

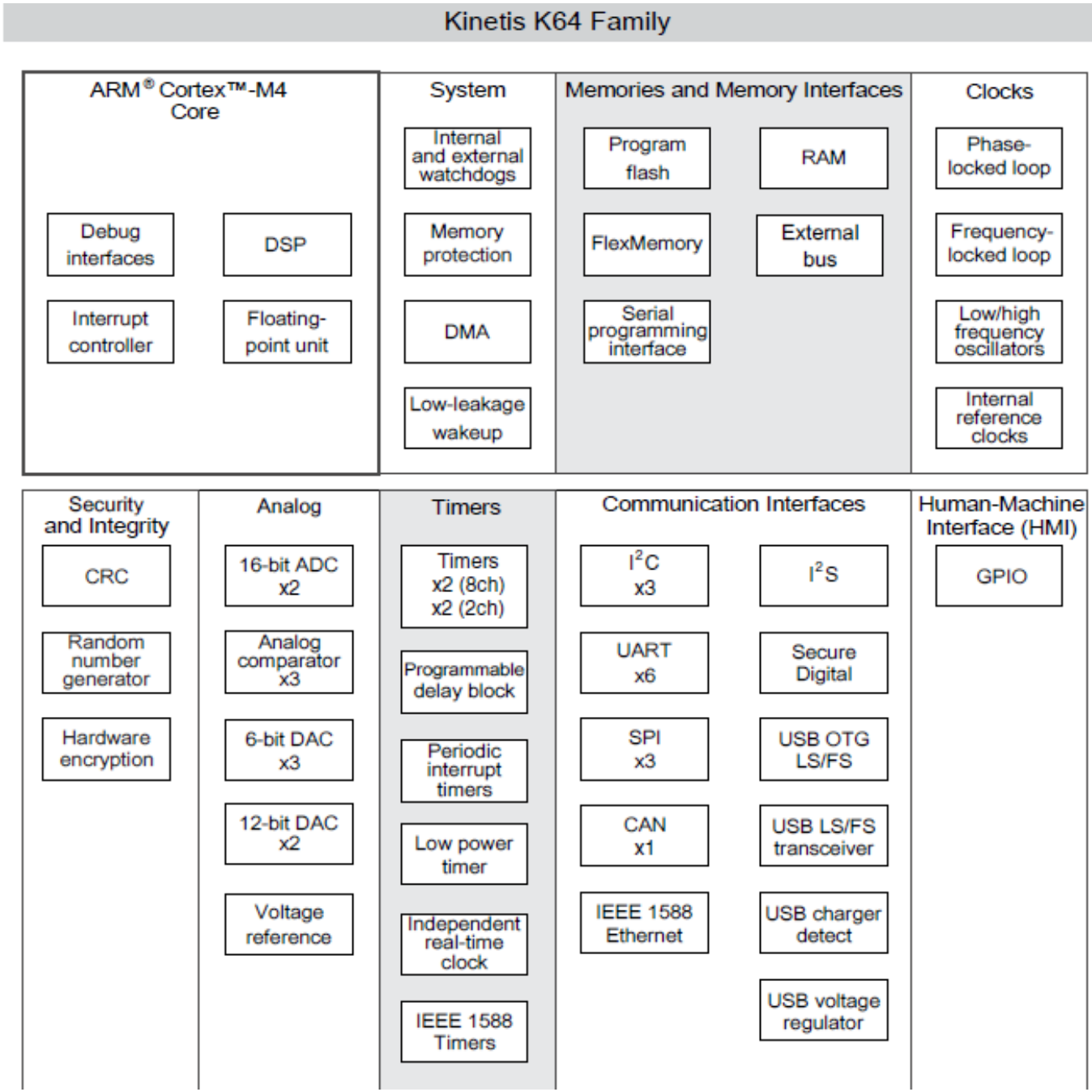

ARM Cortex M4
1 MB Flash
256 KB RAM
32 bit ARM 7 core
120 MHz
A/D, D/A
3x SPI
Timers

FRDM-K64F

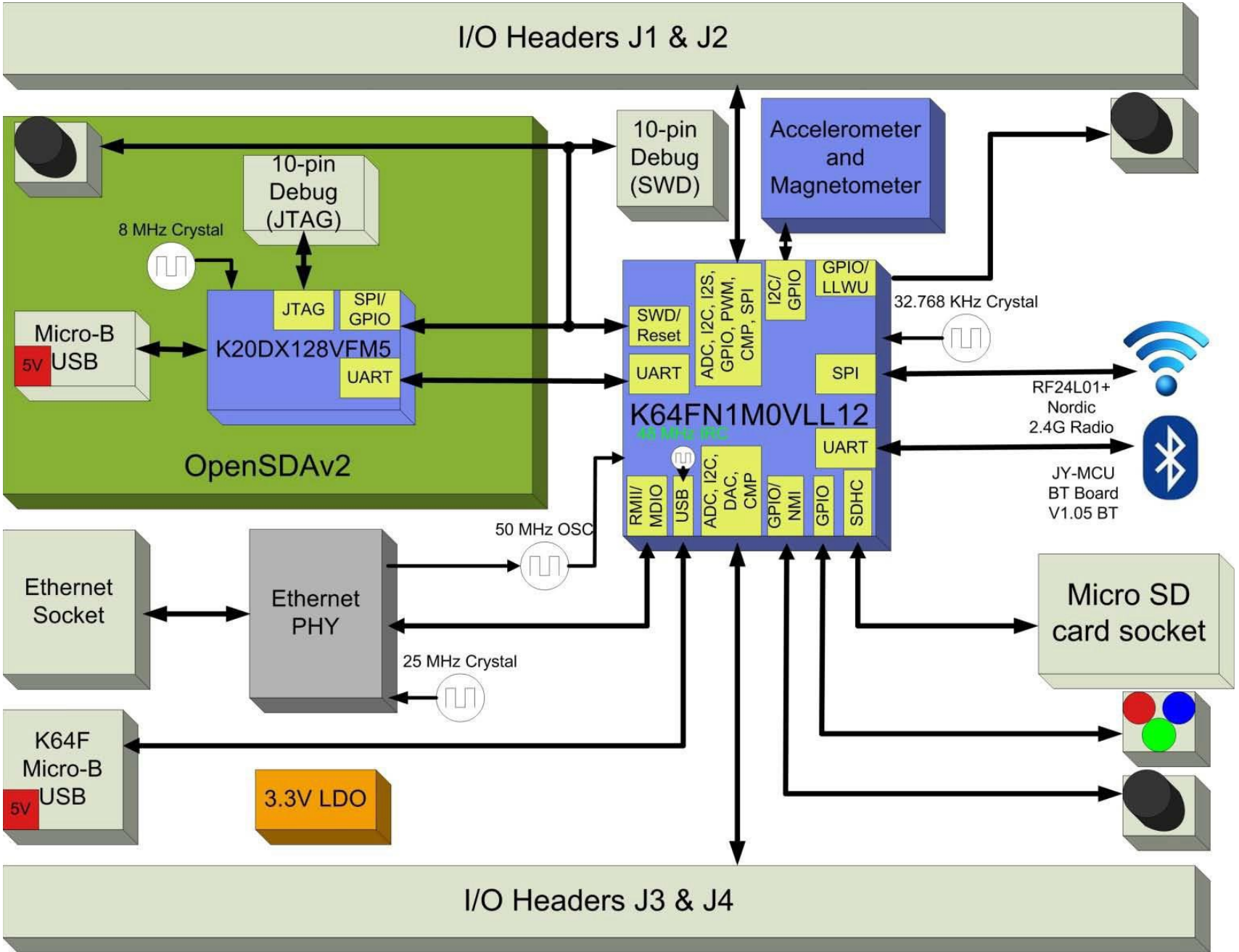
I/O Headers J1 & J2
10-pin Debug (JTAG)
8 MHz Crystal
JTAG
SPI/ GPIO
UART
K20DX128VFM5
Micro-B USB
5V
OpenSDAv2
10-pin Debug (SWD)
Accelerometer and Magnetometer
SWD/ Reset
UART
ADC, I2C, I2S, GPIO, PWM, CMP, SPI
I2C/ GPIO
GPIO/ LLWU
SPI
32.768 KHz Crystal
RF24L01+ Nordic 2.4G Radio
JY-MCU BT Board V1.05 BT
K64FN1M0VLL12
48 MHz IRC
UART
RMII/ MDIO
USB
ADC, I2C, DAC, CMP
GPIO/ NMI
GPIO
SDHC
50 MHz OSC
Ethernet Socket
Ethernet PHY
25 MHz Crystal
Micro SD card socket
K64F Micro-B USB
5V
3.3V LDO
I/O Headers J3 & J4

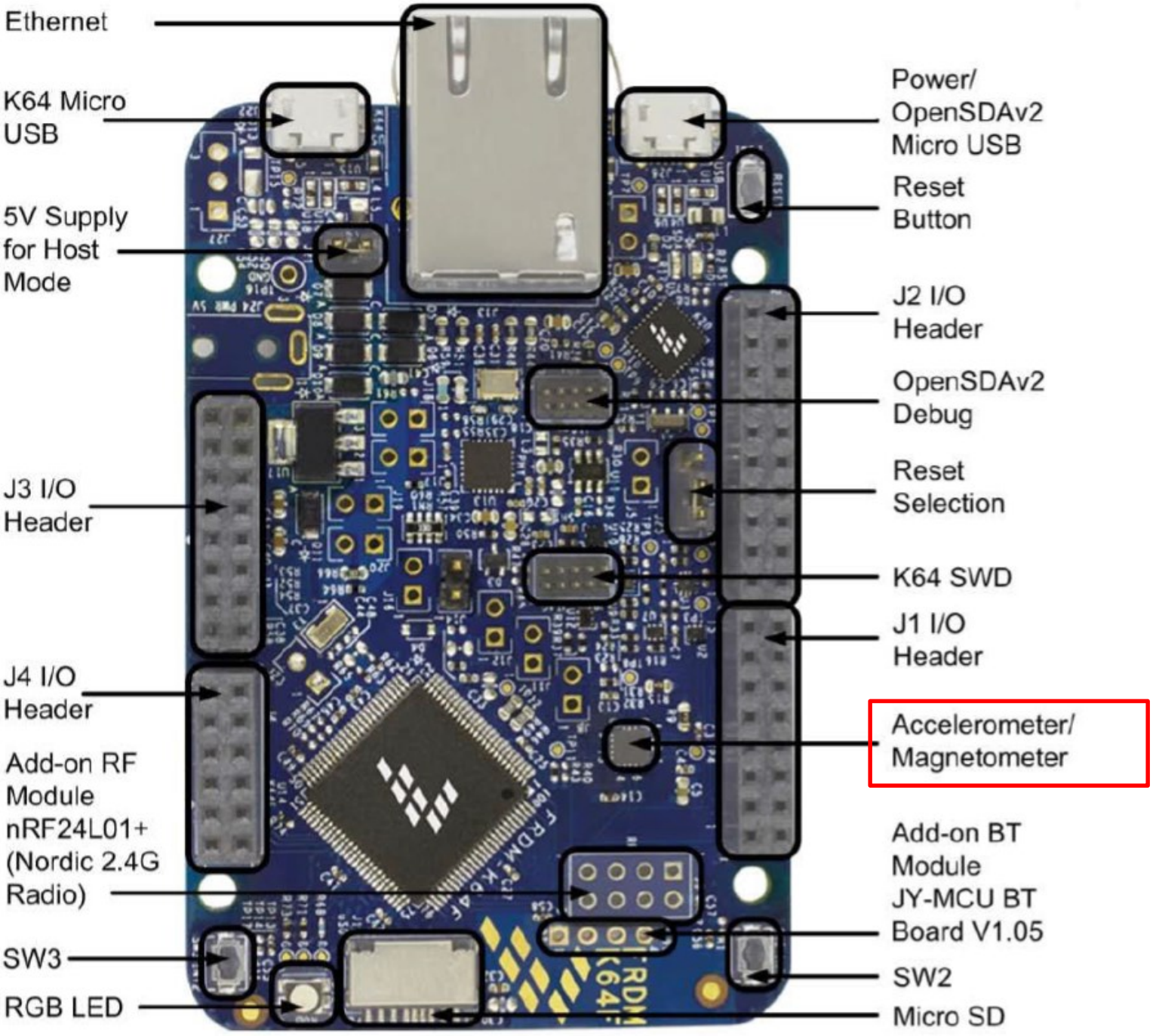
Ethernet
K64 Micro USB
5V Supply for Host Mode
J3 I/O Header
J4 I/O Header
Add-on RF Module nRF24L01+ (Nordic 2.4G Radio)
SW3
RGB LED
Power/ OpenSDAv2 Micro USB
Reset Button
J2 I/O Header
OpenSDAv2 Debug
Reset Selection
K64 SWD
J1 I/O Header
Accelerometer/ Magnetometer
Add-on BT Module JY-MCU BT Board V1.05
SW2
Micro SD

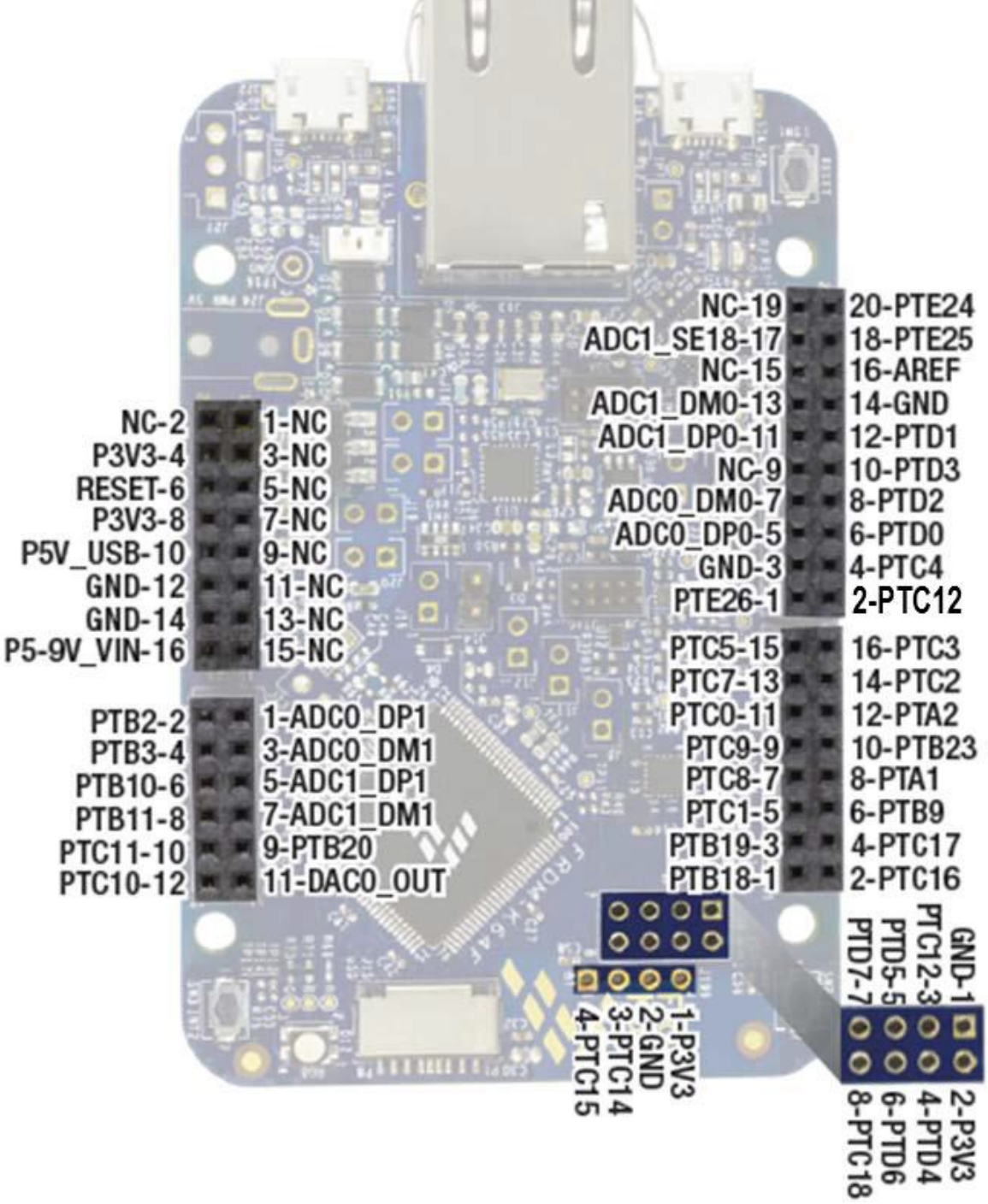
NC-2
1-NC
P3V3-4
3-NC
RESET-6
5-NC
P3V3-8
7-NC
P5V_USB-10
9-NC
GND-12
11-NC
GND-14
13-NC
P5-9V_VIN-16
15-NC
PTB2-2
1-ADC0_DP1
PTB3-4
3-ADC0_DM1
PTB10-6
5-ADC1_DP1
PTB11-8
7-ADC1_DM1
PTC11-10
9-PTB20
PTC10-12
11-DAC0_OUT
NC-19
20-PTE24
ADC1_SE18-17
18-PTE25
NC-15
16-AREF
ADC1_DM0-13
14-GND
ADC1_DP0-11
12-PTD1
NC-9
10-PTD3
ADC0_DM0-7
8-PTD2
ADC0_DP0-5
6-PTD0
GND-3
4-PTC4
PTE26-1
2-PTC12
PTC5-15
16-PTC3
PTC7-13
14-PTC2
PTC0-11
12-PTA2
PTC9-9
10-PTB23
PTC8-7
8-PTA1
PTC1-5
6-PTB9
PTB19-3
4-PTC17
PTB18-1
2-PTC16
1-P3V3
2-GND
3-PTC14
4-PTC15
GND-1
PTC12-3
PTD5-5
PTD7-7
2-P3V3
4-PTD4
6-PTD6
8-PTC18

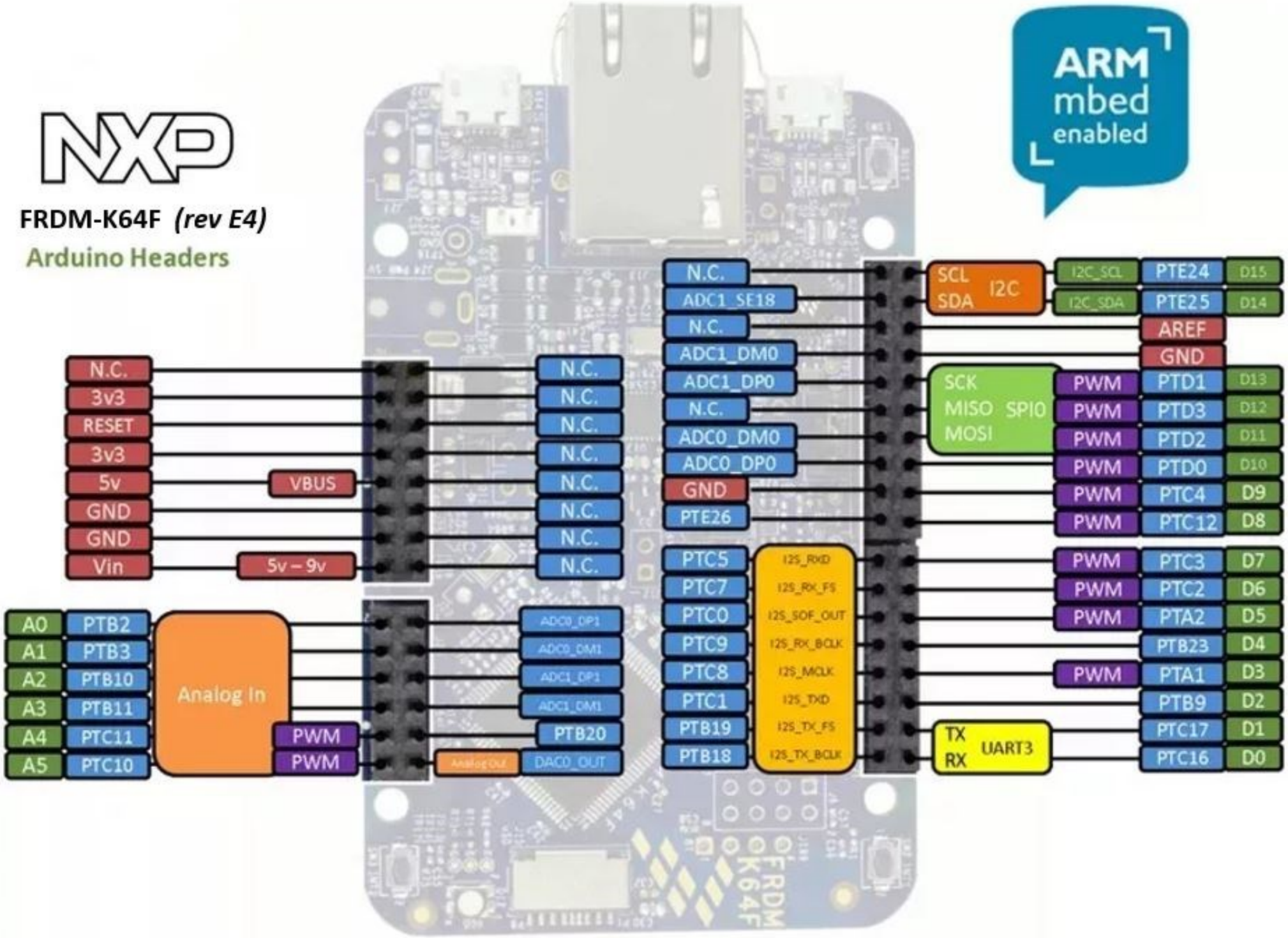
NXP
FRDM-K64F (rev E4)
Arduino Headers
ARM mbed enabled
N.C.
3v3
RESET
3v3
5v
GND
GND
Vin
VBUS
5v – 9v
N.C.
N.C.
N.C.
N.C.
N.C.
N.C.
N.C.
N.C.
A0 PTB2
A1 PTB3
A2 PTB10
A3 PTB11
A4 PTC11
A5 PTC10
Analog In
PWM
PWM
ADC0_DP1
ADC0_DM1
ADC1_DP1
ADC1_DM1
PTB20
Analog Out
DAC0_OUT
N.C.
ADC1_SE18
N.C.
ADC1_DM0
ADC1_DP0
N.C.
ADC0_DM0
ADC0_DP0
GND
PTE26
PTC5
PTC7
PTC0
PTC9
PTC8
PTC1
PTB19
PTB18
I2S_RXD
I2S_RX_FS
I2S_SOF_OUT
I2S_RX_BCLK
I2S_MCLK
I2S_TXD
I2S_TX_FS
I2S_TX_BCLK
SCL
SDA
I2C
I2C_SCL
I2C_SDA
PTE24 D15
PTE25 D14
AREF
GND
SCK
MISO
MOSI
SPI0
PWM PTD1 D13
PWM PTD3 D12
PWM PTD2 D11
PWM PTD0 D10
PWM PTC4 D9
PWM PTC12 D8
PWM PTC3 D7
PWM PTC2 D6
PWM PTA2 D5
PTB23 D4
PWM PTA1 D3
PTB9 D2
PTC17 D1
PTC16 D0
TX
RX
UART3

K64F Power Supply

5-9 volt input

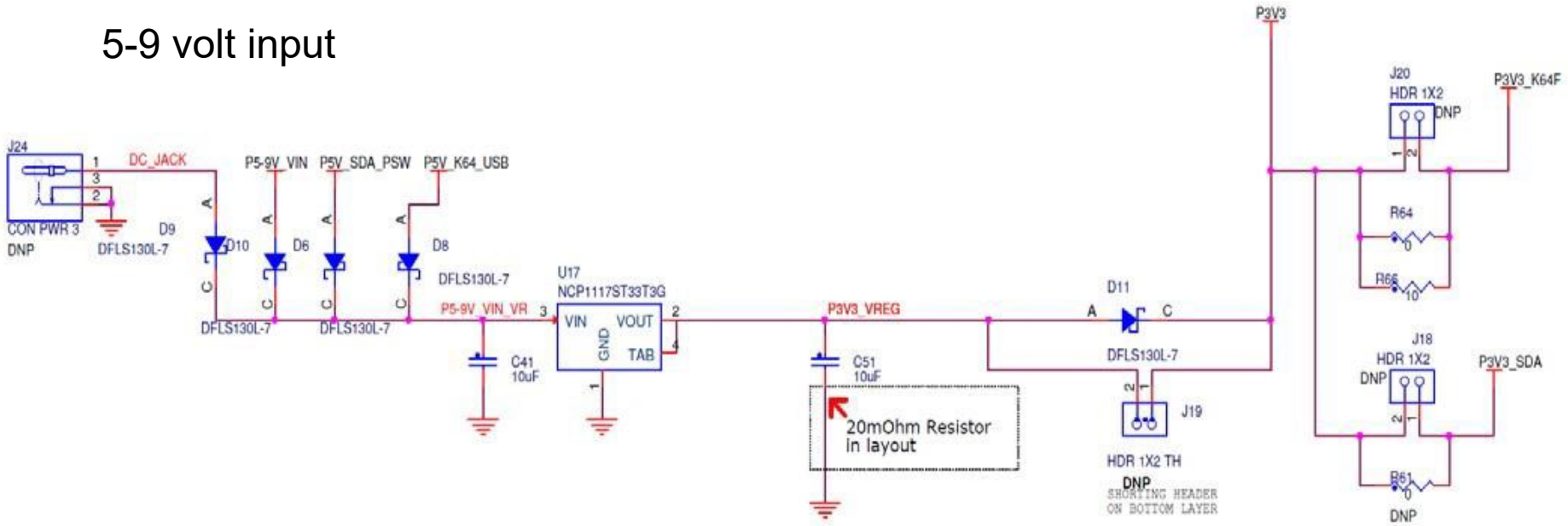

FreeRTOS

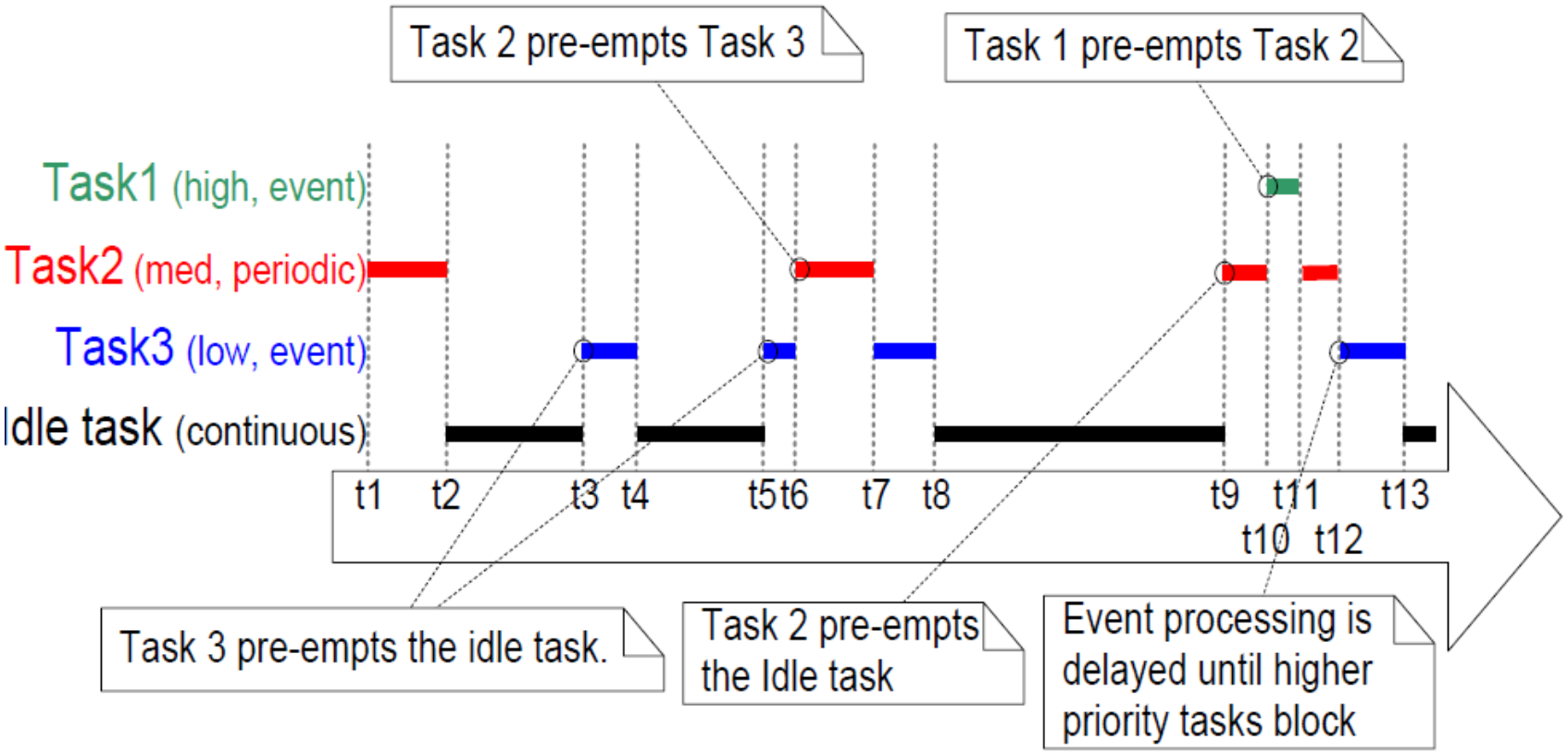

26. Execution pattern highlighting task prioritization and pre-emption in a hypothetical application in which each task has been assigned a unique priority

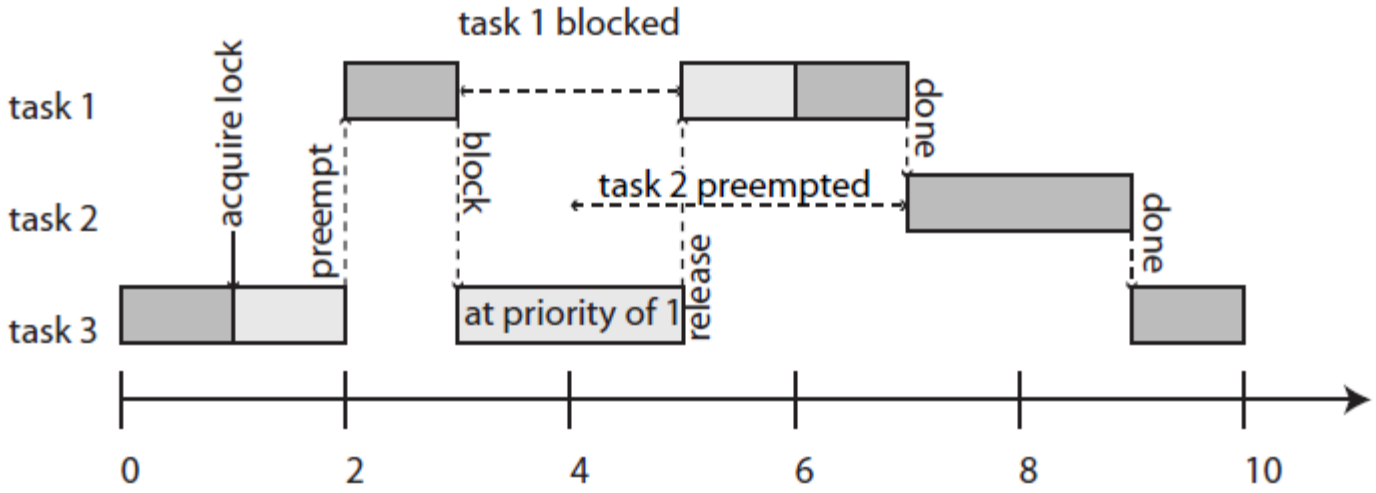

Figure 12.10: Illustration of the priority inheritance protocol. Task 1 has highest priority, task 3 lowest. Task 3 acquires a lock on a shared object, entering a critical section. It gets preempted by task 1, which then tries to acquire the lock and blocks. Task 3 inherits the priority of task 1, preventing preemption by task 2.

Electronic Components

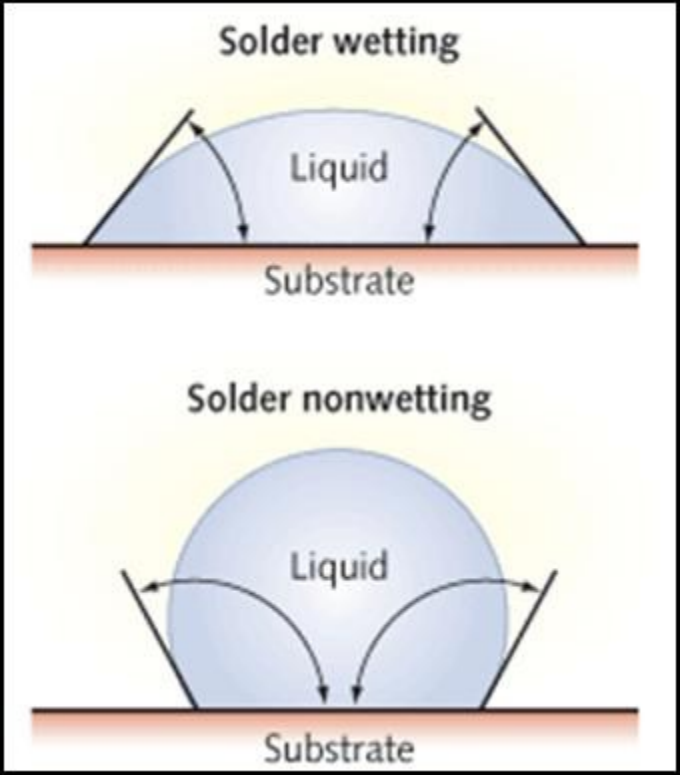

From:
http://solutions.palomartechnologies.com/Portals/60069/images//Wetting%20vs%20non-wetting%20conditions-resized-600.JPG

EE192- Soldering Notes

- Oxide has lower energy than clean metal
- Higher energy surfaces attract molten solder
- Oxides have higher melting points than metals
- Oxides have lower thermal conductivity than metals
- Flux helps to prevent oxide formation, but is an insulator

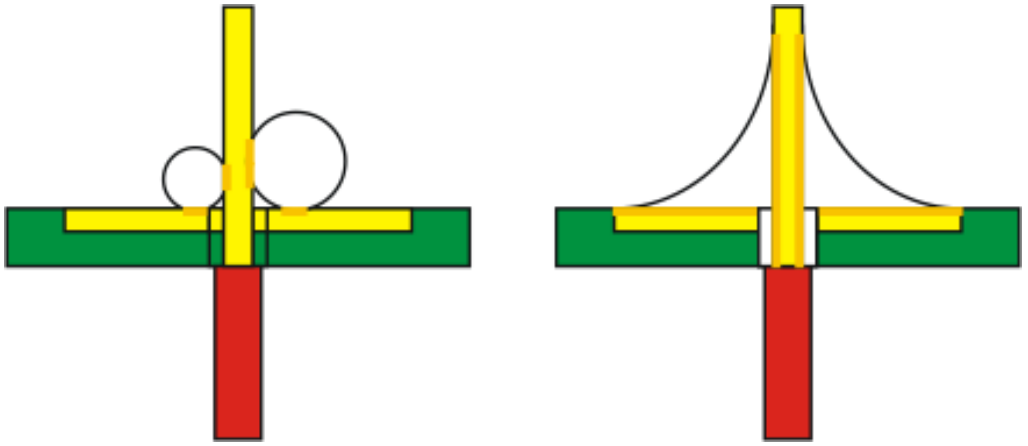

From:http://www.slagcoin.com/joystick/pcb_wiring/bond.png

Resistor Color Code

From:
http://www.hep.fsu.edu/~wahl/phy3802/expinfo/electronics/res-color-code.gif

		Multiplier
BLACK	0	_____
BROWN	1	_____0
RED	2	_____00
ORANGE	3	____000
YELLOW	4	__0, 000
GREEN	5	_00, 000
BLUE	6	000, 000
VIOLET	7	
GRAY	8	
WHITE	9	

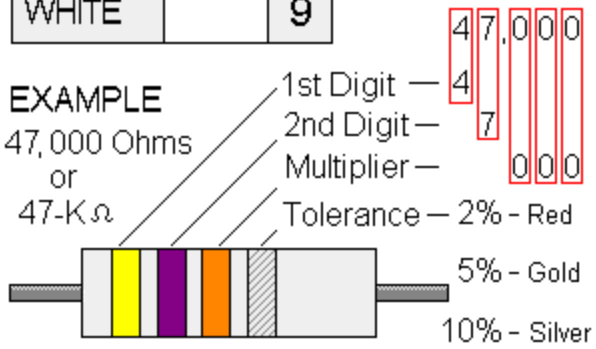

Yellow | violet | orange| gold

Capacitor Codes

From:http://www.applefritter.com/sites/default/meta/replicacreation/images/fige-10.png

VALUE	CODE
10 pF	100
100 pF	101
1000 pF	102
.001 µF	102
.01 µF	103
.1 µF	104

MULTILAYER (270 pF)

CERAMIC DISCS (.001 µF) (0.1 µF)

ELECTROLYTIC 1 µF

Better be right or your great big venture goes west…

Capacitor Types-ceramic

CAP CER 0.1UF 50V X7R RADIAL

0.1µF ±20% 50V Ceramic Capacitor Z5U Radial

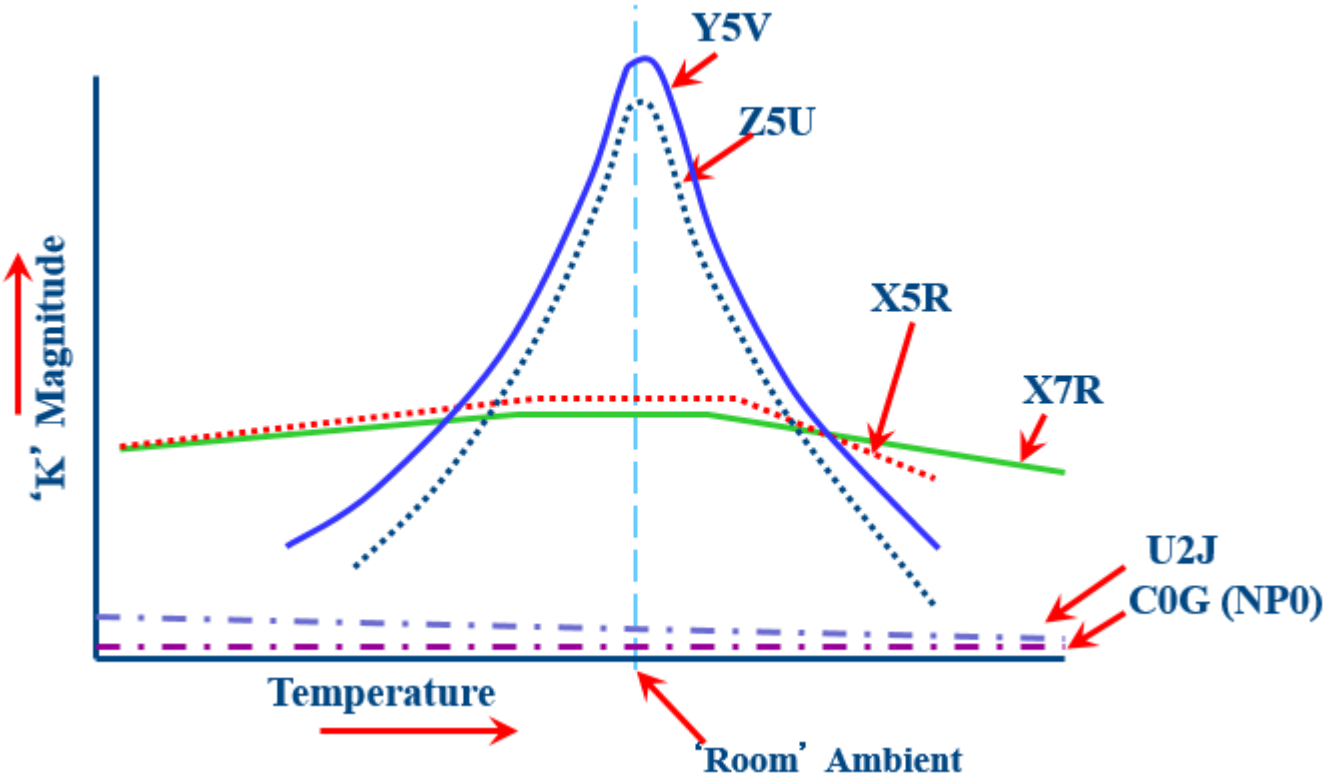

https://ec.kemet.com/wp-content/uploads/2015/12/ceramic-dielectric-comparison-chart.png

CAP CER 0.1UF 630V X7R RADIAL

CAP CER 0.1UF 50V X7R 0805

Capacitor Types- 47 uF 50V

Ripple Current
600mA

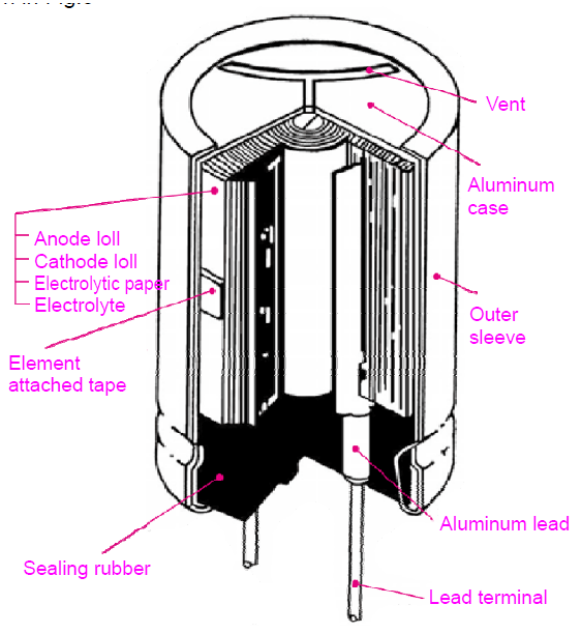

Eletrolytic Ripple Current
169mA @ 120Hz

https://industrial.panasonic.com

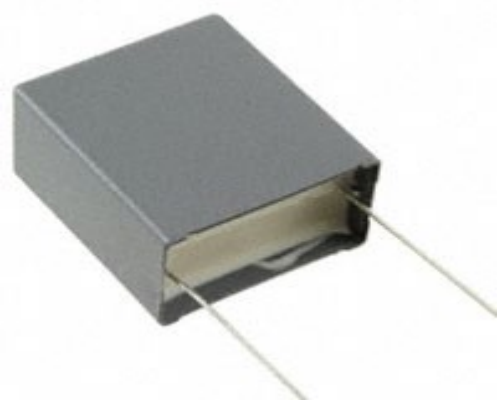

Metalized film

CAP TANT 22UF 50V
20% 2917

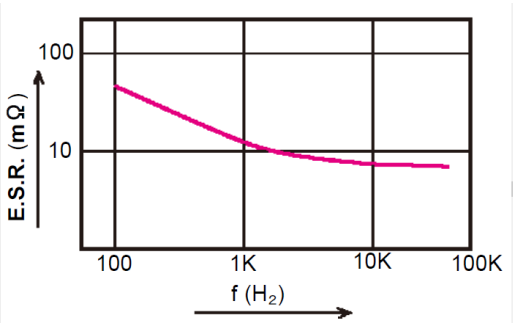

Fig.13 ESR vs frequency