EECS192 Lecture 9
Mar. 13, 2018

Notes:

1. Check off-
    1. 3/16 open loop figure 8 drop and run
    2. 3/23 closed loop figure 8 drop and run
    3. Setup courtyard track
2. Progress Report due Tues 4/3 in class
3. HW 2 due Fri Mar 23, 6 pm in bcourses
4. CalDay Sat. April 21 @ UCB

Topics

- Quiz 4
- Feedback control overview: P, PI control
- Bicycle steering model
- V-rep steering simulator
- Software notes for embedded control

Control overview

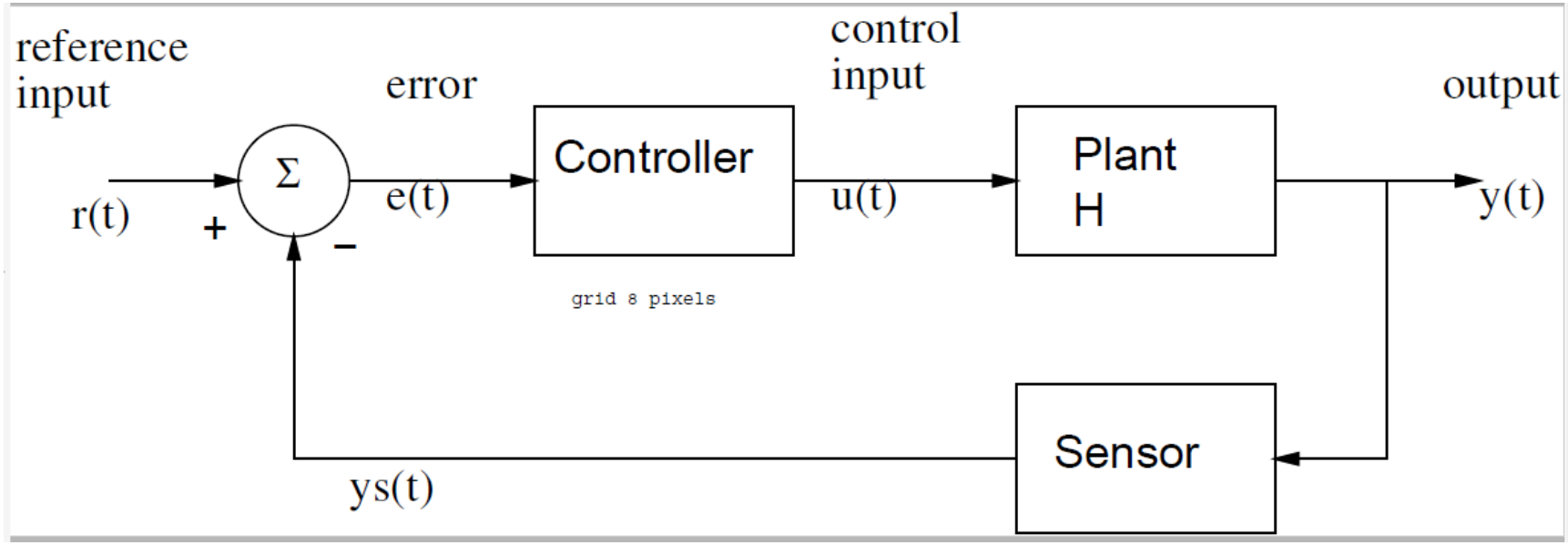

On board…

Proportional control:

U = kp*e = kp* (r-y);

Proportional + integral control

```
U = kp*e + ki * e_sum;
e_sum = e_sum + e;
```

Bicycle Steering Model

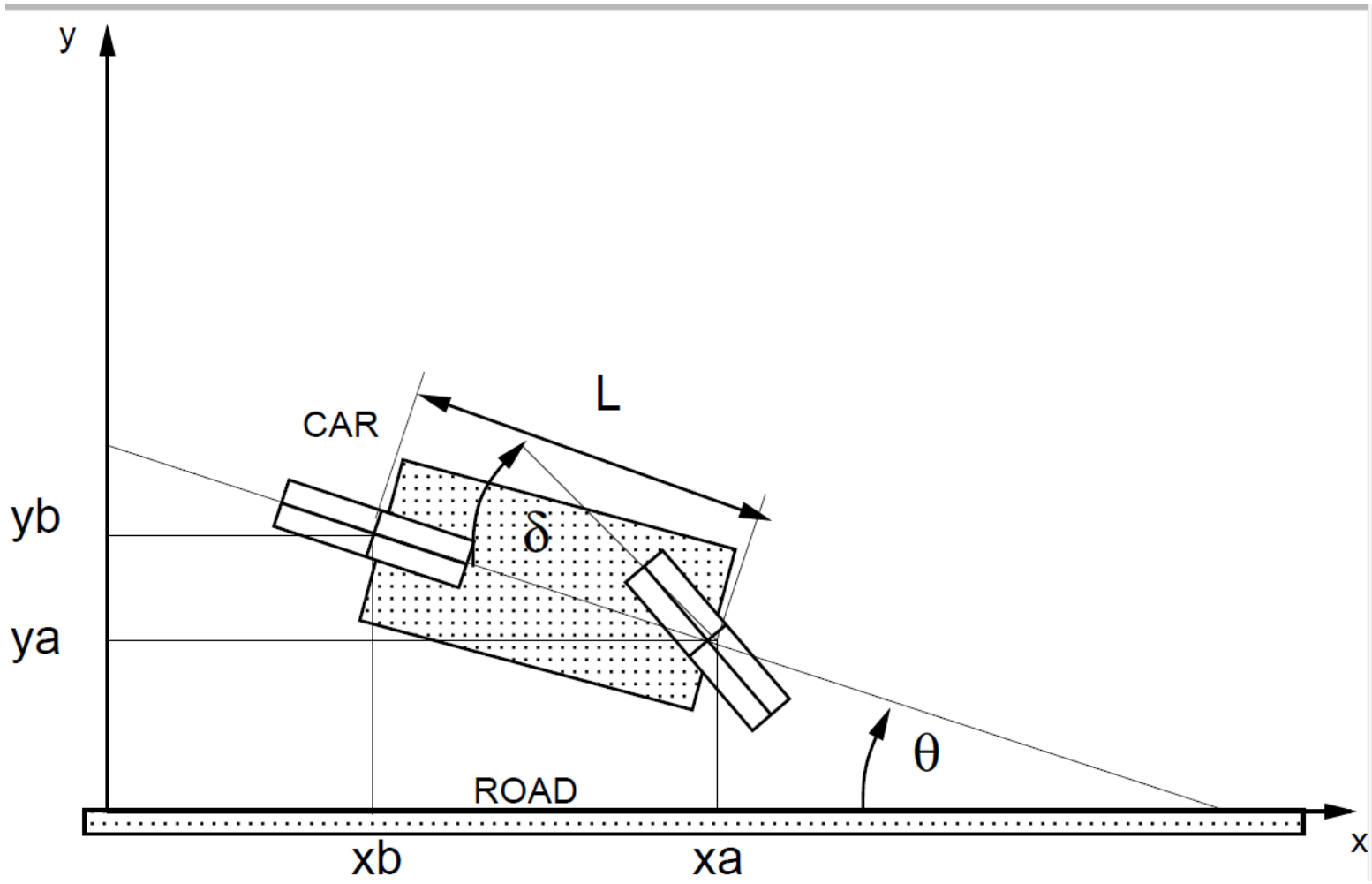

On board

Bicycle Steering Control

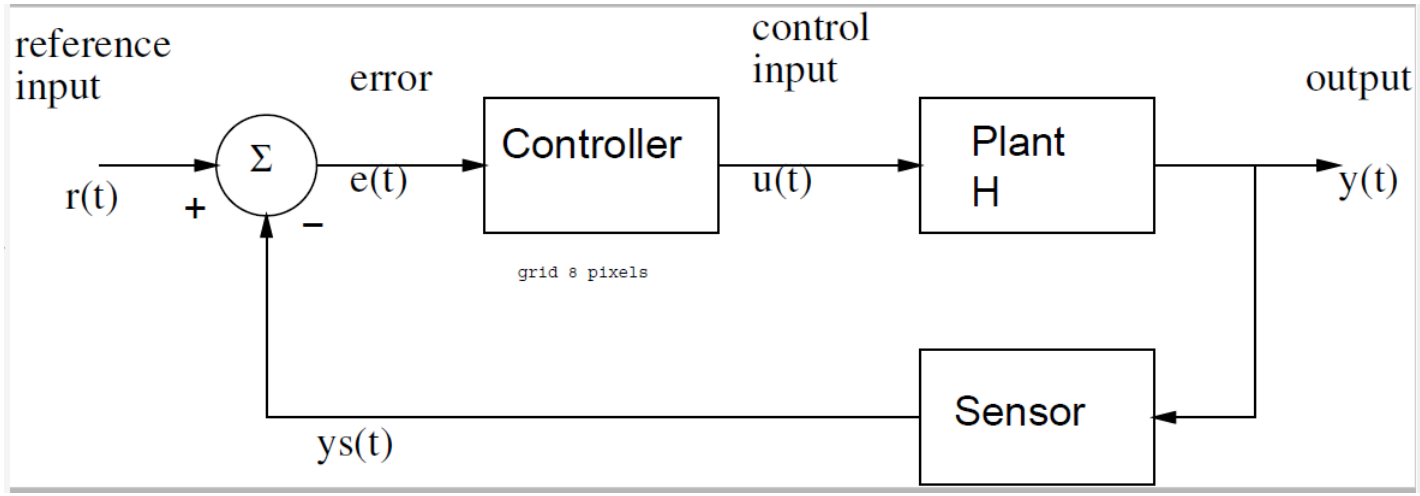

Note steady state error:
car follows larger radius

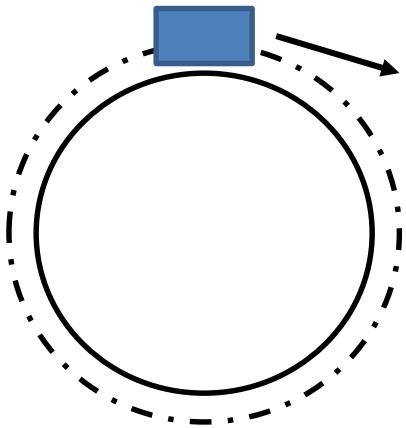

Proportional control:
r = 0 (to be on straight track)
$\delta = u = kp*e$

On board

V-rep simulation

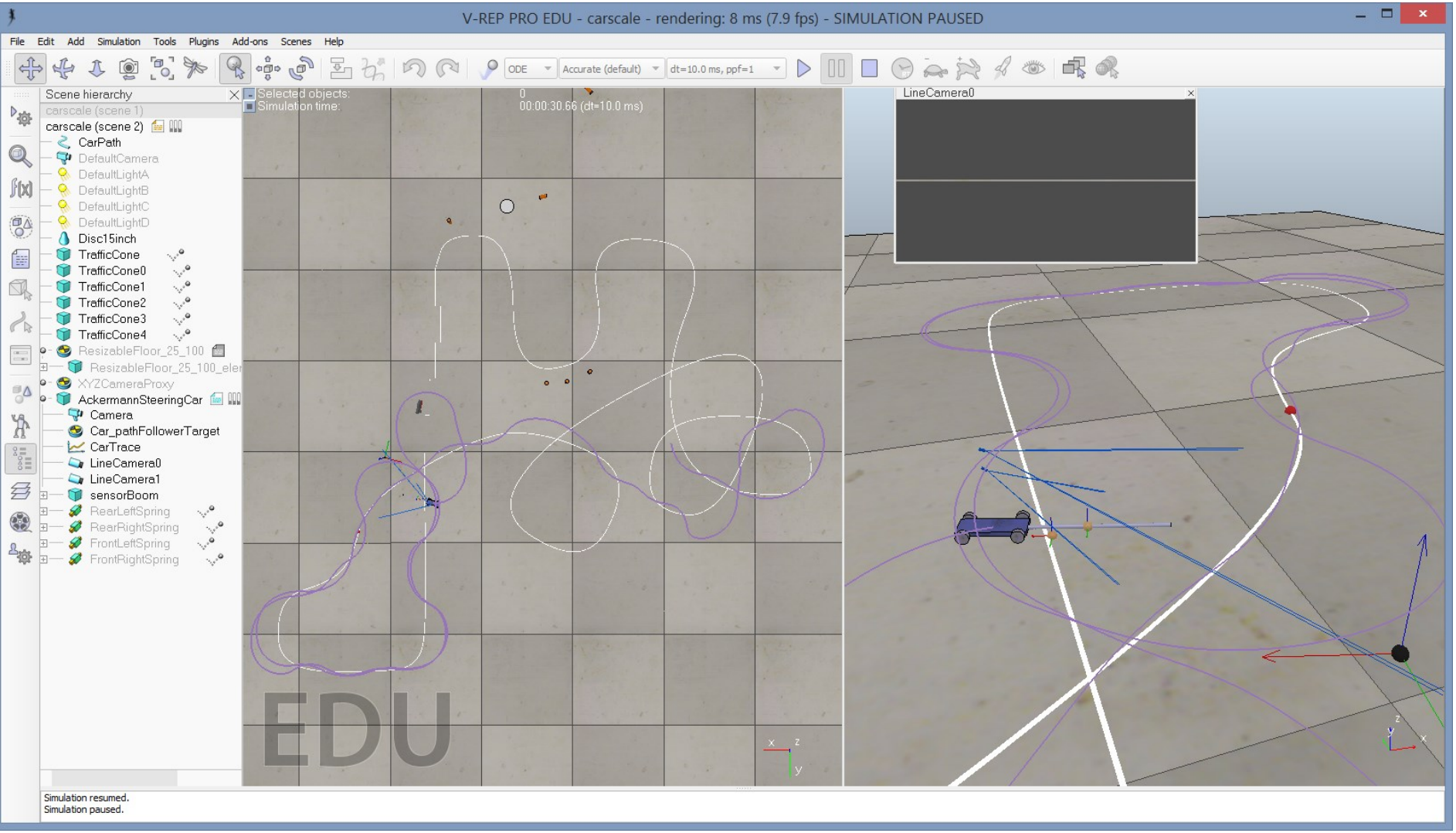

demo

Software Notes