EECS192 Lecture 4
Feb. 12, 2019

Notes:
Check off-
- 2/15: Motor drive/stall, steering servo
- Quiz 2: power MOSFET/motor drive Tues 2/19

Topics
- Polarized capacitor
- Project proposal feedback
- Quiz 1
- Driving MOSFETs and motor (conclusion)
  - MC33883 MOSFET driver
  - H bridge
- PWM and motor drive (conclusion)
- RC servo notes
- Power supplies and Wiring
- Linear Regulator
- Buck Converter

47uF, 16V electrolytic, **polarized**
Not all same- ESR…

Project proposal feedback: Motor Driver

Schematic

- Estop: what to switch?
- G_EN = 5V not 3.3V.
- Snubbing capacitors and diode
- Drive/brake/enable/dir- shoot through protection
- Need accel/coast/brake to avoid burning out motor/transistors
- Connectors- battery, motor, IO connections+ground
- Make sure capacitors on MC33883 are connected (needed for charge pump) and appropriate Vcc.
- Watch out for RC time constant on gate.
  Ciss Input Capacitance =8970pF.

Circuit Layout

- Mounting holes
- Big wires, short distances
- QFN vs SOIC package, SMD vs through hole
- Heat sinks- horizontal transistor is more robust
- Estop switch
- Signal connectors- include ground
- Power connectors

Project proposal feedback:

2.2 Mechanical Mount

- Encoder location: find easily accessible location, not in suspension
- Materials: 3D printed parts, and acrylic: heavy and brittle. Consider Styrofoam or thin-wall tube

3.1 IO Lines

- PWM? GPIO line won't be real time. Need PWM hardware, or PRU. PWM0 is available on ``GPS'' connector through librobotcontrol.

- Encoder? GPIO line is not setup to count edges and may miss fast samples. QEP avail if using quadrature (maybe hack with delay for using single detector). Could also use PRU and a GPIO input line. (PRU0 already setup for Chan 4 quad encoding).
  - Maybe use timer 7 to latch event of rising edge of signal (ch 20)
  - Maybe use eCAP to catch rising edge (Ch 15)

Driving MOSFETs and motor

H-Bridge Gate Driver IC

The 33883 is an H-bridge gate driver (also known as a full-bridge pre-driver) IC with integrated charge pump and independent high and low side gate driver channels. The gate driver channels are independently controlled by four separate input pins, thus allowing the device to be optionally configured as two independent high side gate drivers and two independent low side gate drivers. The low side channels are referenced to ground. The high side channels are floating.

The gate driver outputs can source and sink up to 1.0 A peak current pulses, permitting large gate-charge MOSFETs to be driven and/or high pulse- width modulation (PWM) frequencies to be utilized. A linear regulator is incorporated, providing a 15 V typical gate supply to the low side gate drivers.

This device powered by SMARTMOS technology.

Features

- V_{CC} operating voltage range from 5.5 V up to 55 V
- V_{CC2} operating voltage range from 5.5 V up to 28 V
- CMOS/LSTTL compatible I/O
- 1.0 A peak gate driver current
- Built-in high side charge pump
- Under-voltage lockout (UVLO)
- Over-voltage lockout (OVLO)
- Global enable with <10 μA Sleep mode
- Supports PWM up to 100 kHz

33883

H-BRIDGE GATE DRIVER IC

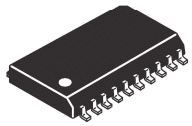

EG SUFFIX (PB-FREE)
98ASB42343B
20-PIN SOICW

ORDERING INFORMATION		
Device (Add R2 Suffix for Tape and Reel)	**Temperature Range (T_A)**	**Package**
MC33883HEG	-40 °C to 125 °C	20 SOICW

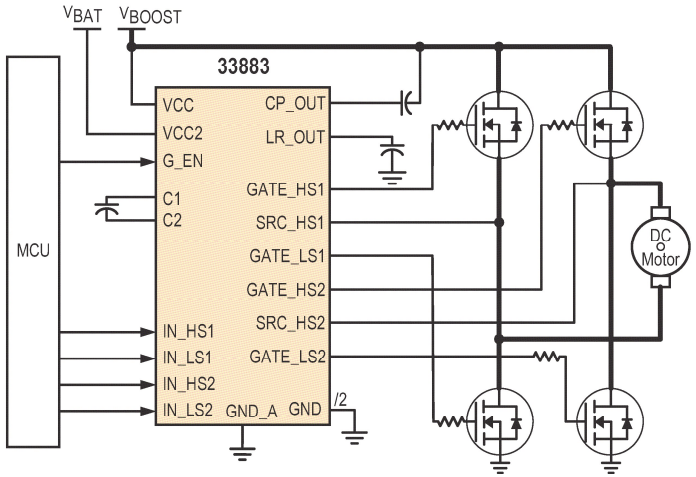

Figure 1. 33883 Simplified Application Diagram

Driving MOSFETs and motor

MC33883 + H bridge

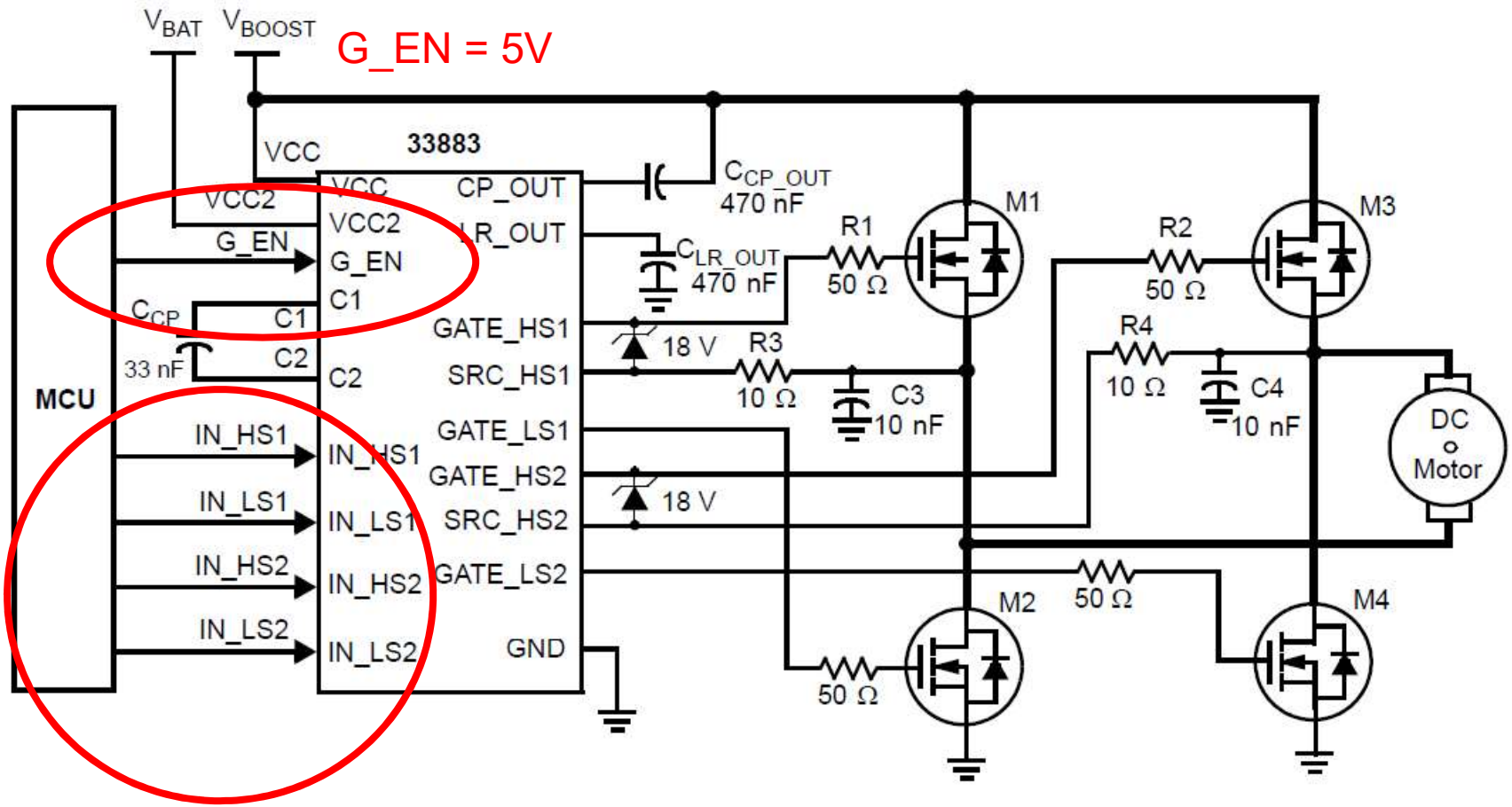

Figure 14. Application Schematic with External Protection Circuit

!!!!CAUTION!!!!
Software fries hardware….
Need protection logic- 74HCxxx
Estop?

PWM on BeagleBone Blue

Manual with details: inst.eecs.berkeley.edu/~ee192/sp19/files/am3359-pwm.pdf

Figure 15-27. Up-Down-Count Mode Symmetrical Waveform

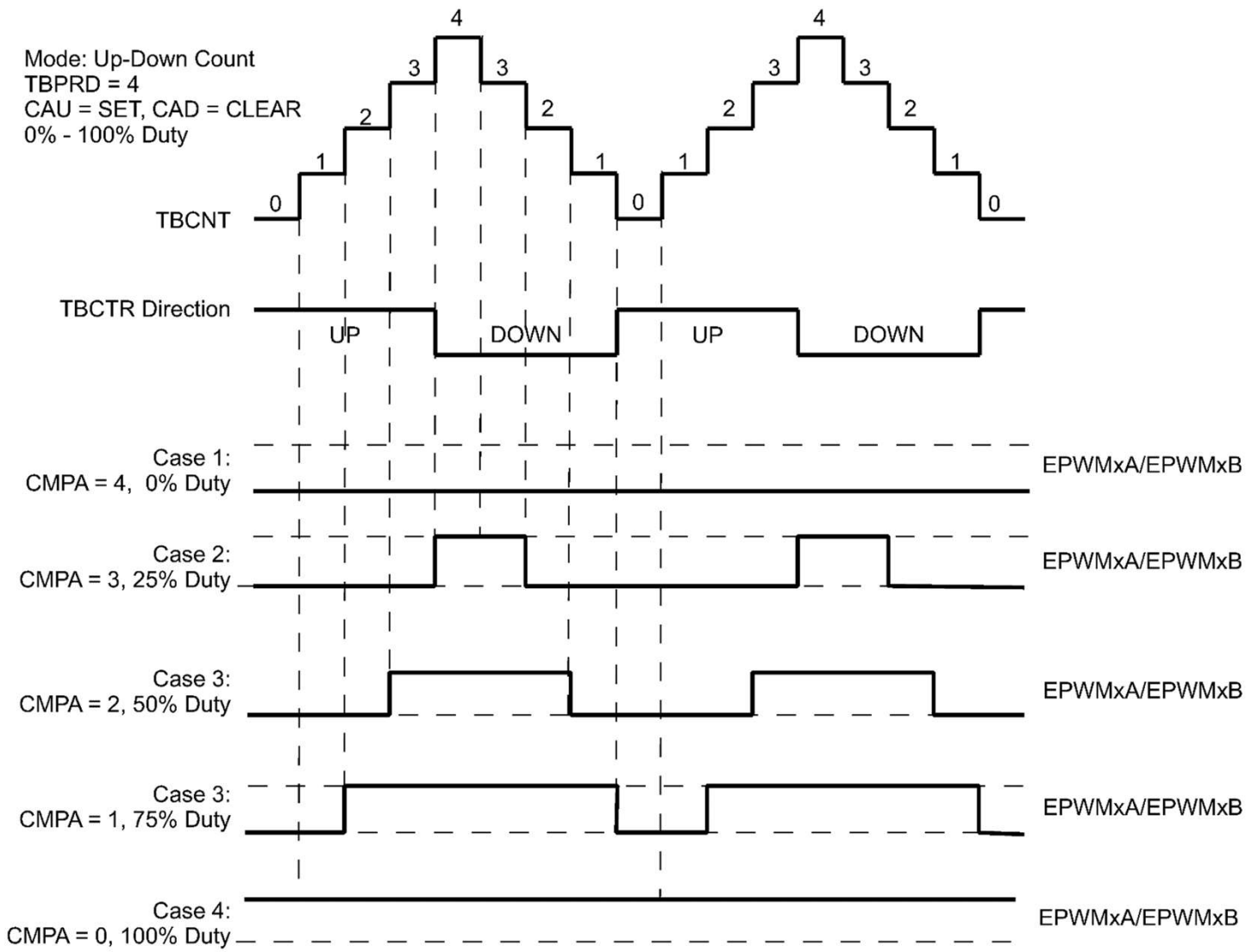

PWM for Main Motor control

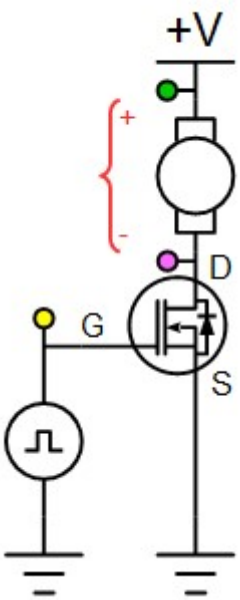

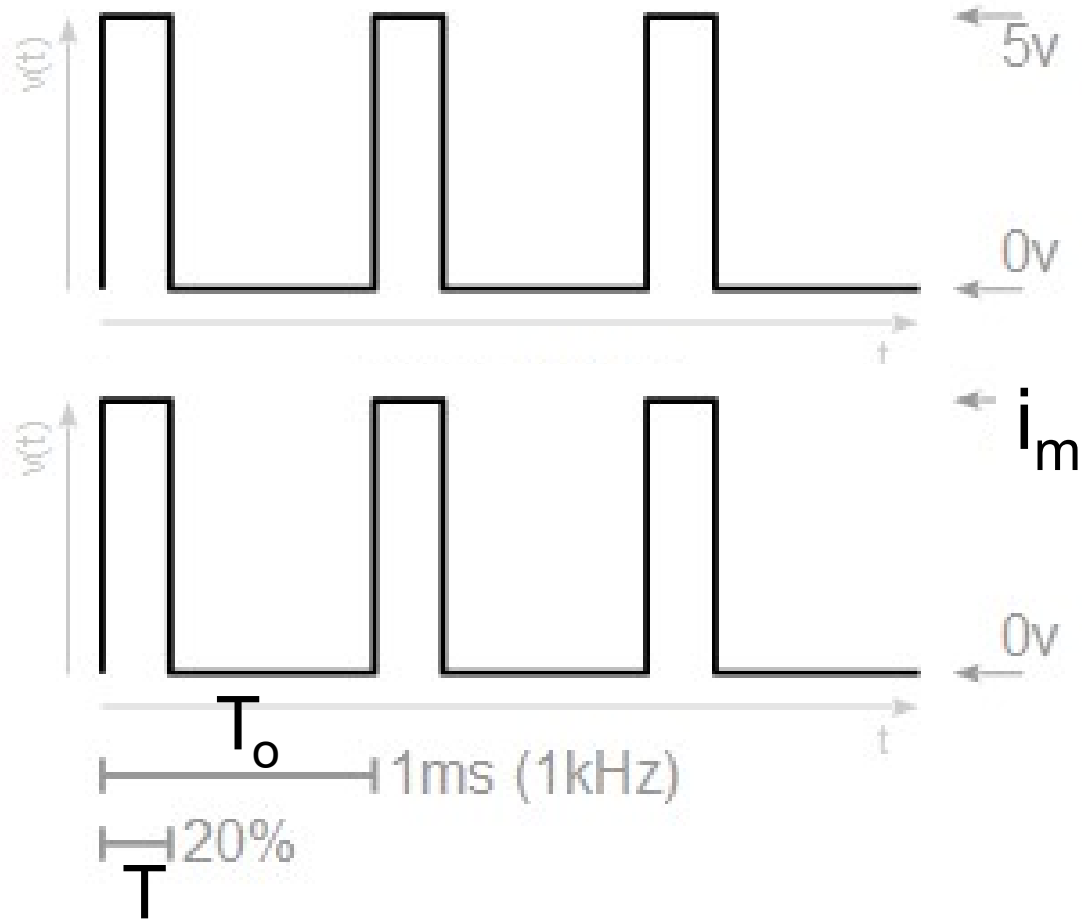

$\langle i_m \rangle = (T/T_o)\, i_{max}$

Is i_{max} constant?

Motor Electrical Model

Motor Electrical Model
Back EMF
Motor electromechanical behavior

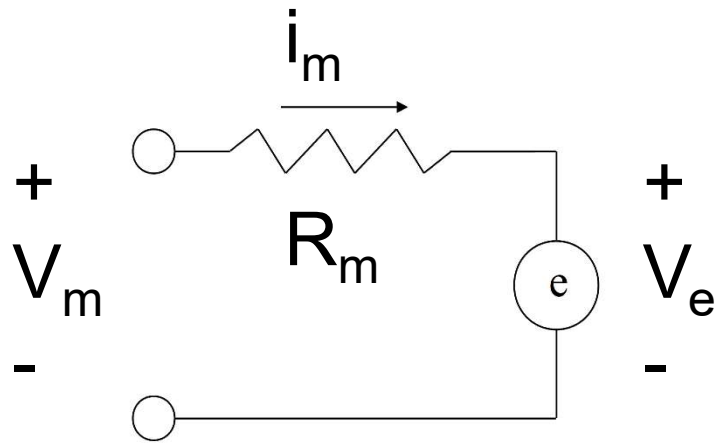

Also- see motor worksheet……

$$i_m = \frac{V_{BAT} - k_e \dot{\theta}_m}{R_m}$$

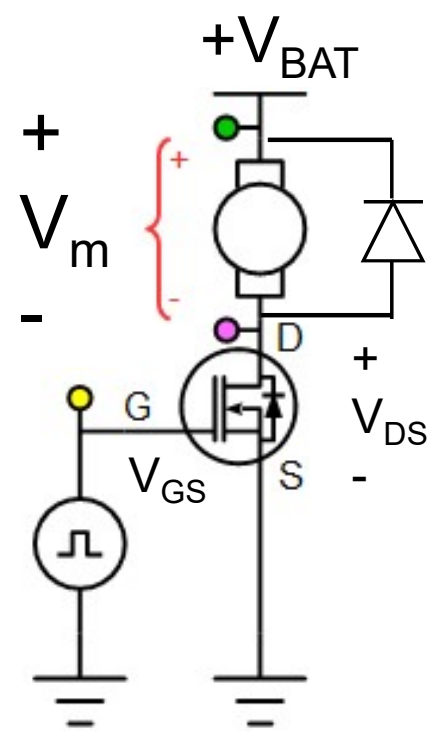

Motor Resistance?
Peak current?

Conclusion:
$\langle i_m \rangle = ?$

RC Servo notes

PWM for Steering Servo

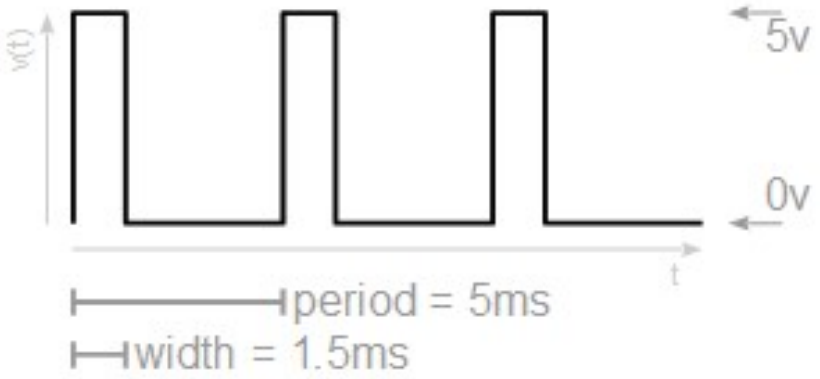

Gotchas:

- 4.8 or 6V, (Not 7.2V! or 11V!!!!!)
- max current 2A
- May be sensitive to noise on supply line
- Performance depends on voltage

Power supplies and Wiring

Power supply wiring- BAD!

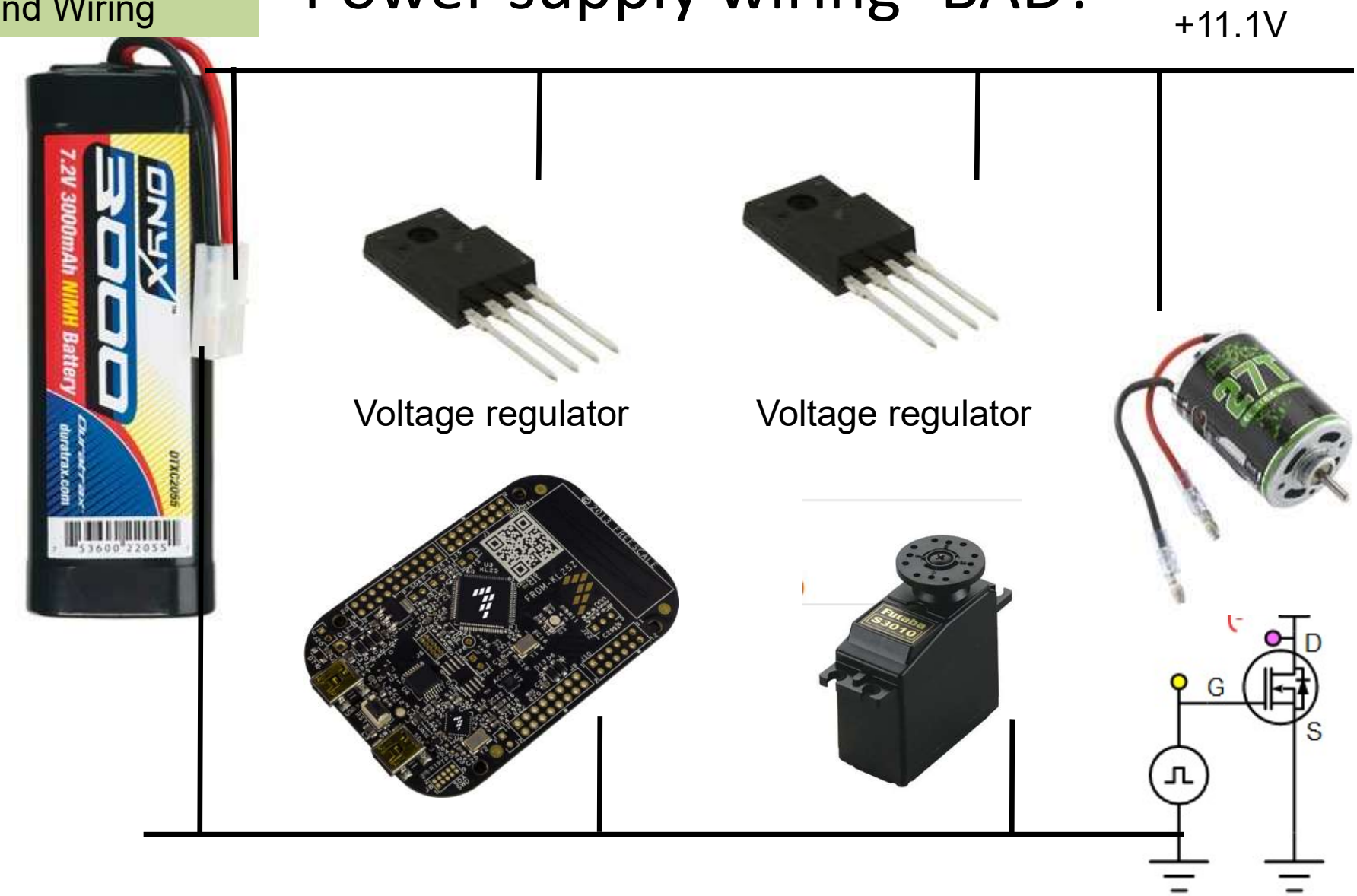

On board: what does this look like electrically (as a schematic)?

Power supplies and Wiring

Power supply wiring- Star is better!

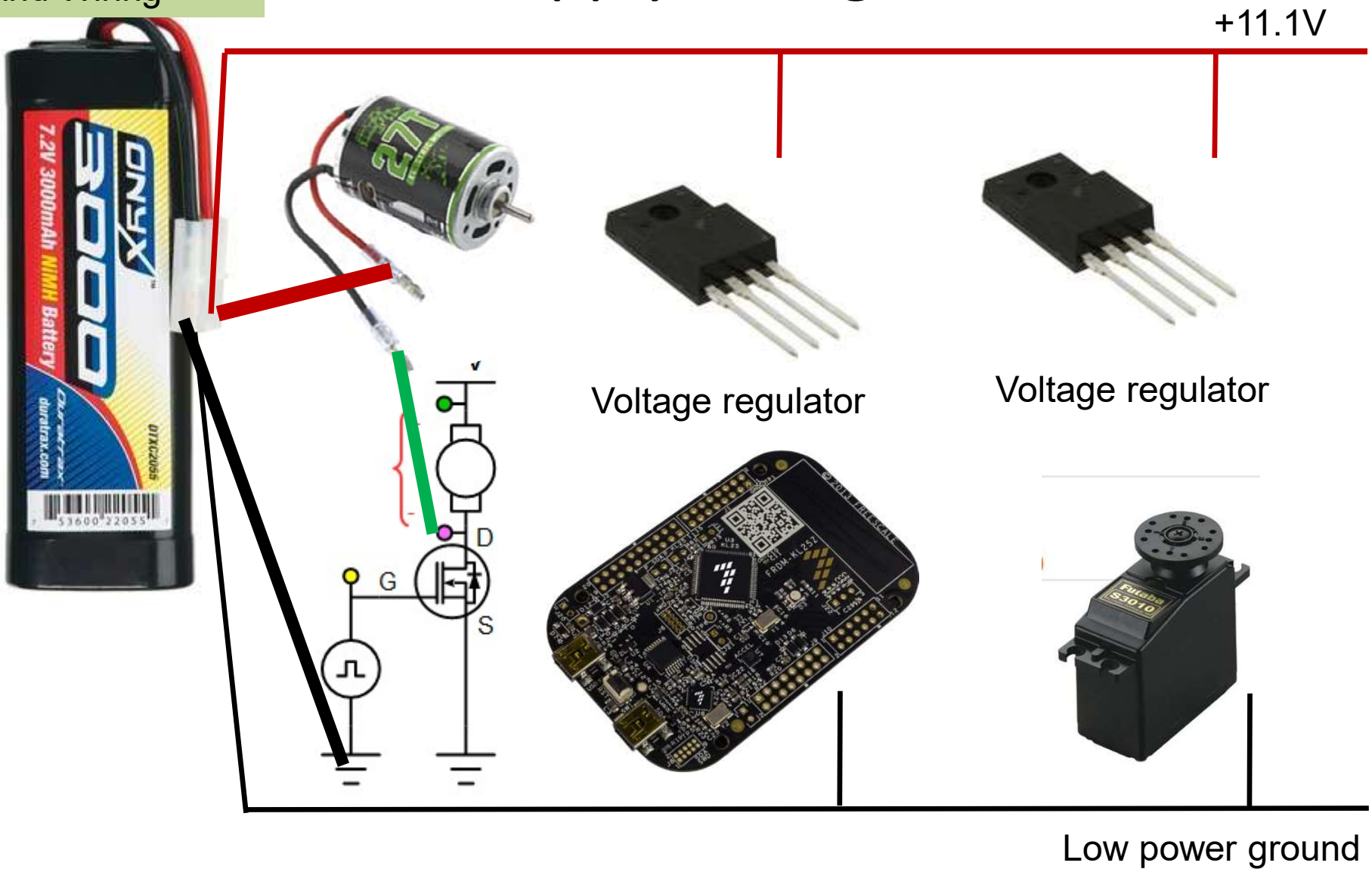

On board: what does this look like electrically (as a schematic)?

Ohms/square

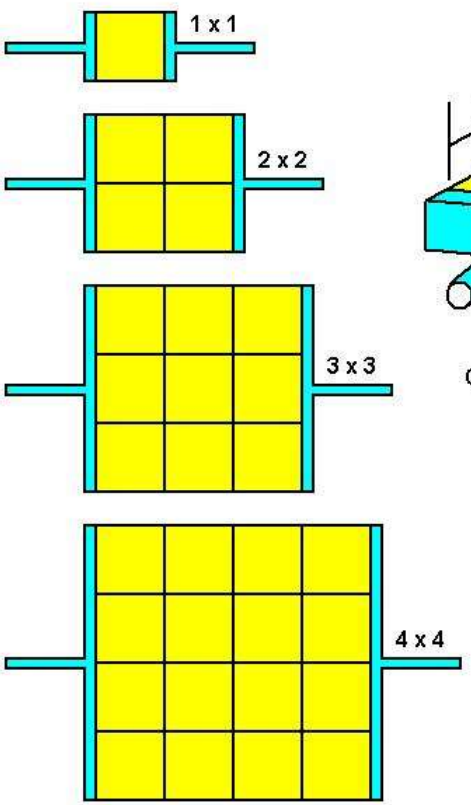

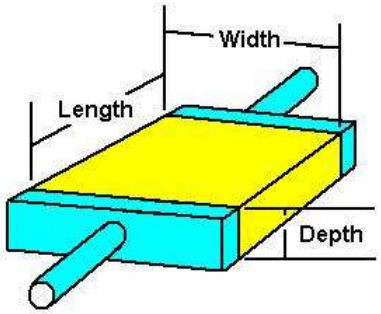

$$\text{Ohms} = \frac{\text{Resistivity x Length}}{\text{Width x Depth}}$$

For some given depth, resistance is directly in proportion to length and inversely proportional to width.

Therefore, we can rate the resistive material of constant depth in terms of ohms per square.

Cu Weight oz.	Thickness mm(mils)	mΩ/Square 25°C	mΩ/Square 100°C
1/2	.02 (0.7)	1.0	1.3
1	.04 (1.4)	0.5	0.65
2	.07 (2.8)	0.25	0.36
4	.13 (5.3)	0.13	0.18

http://www.edn.com/design/components-and-packaging/4411971/Counting-squares--A-method-to-quickly-estimate-PWB-trace-resistance

MC33883 burn out protection

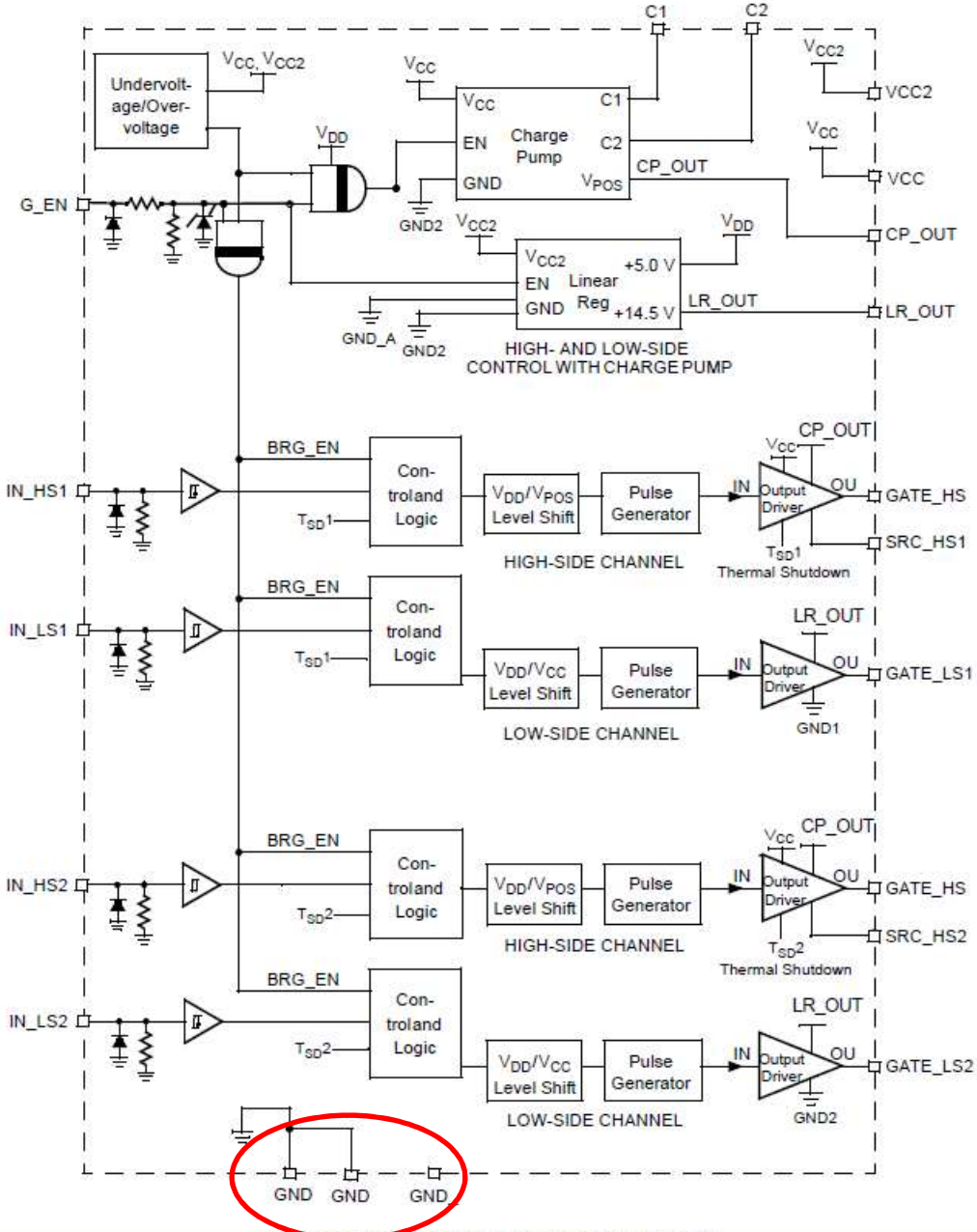

Figure 2. 33883 Simplified Internal Block Diagram

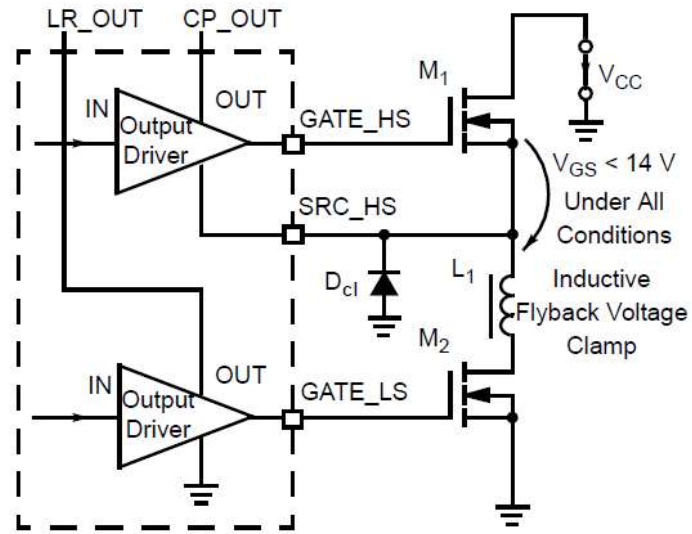

Figure 12. Gate Protection and Flyback Voltage Clamp

Caution: don't run motor current through here

Power supplies and Wiring

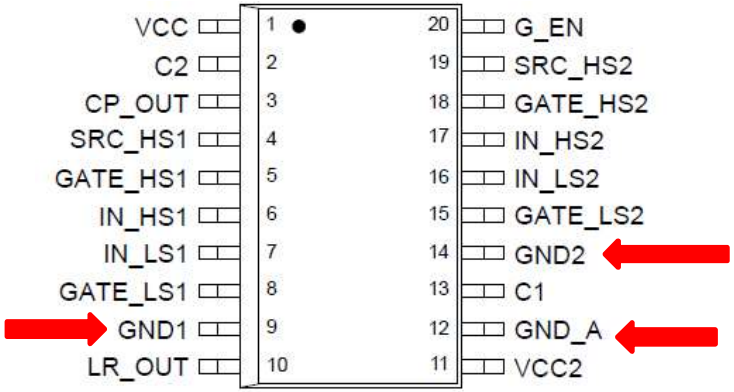

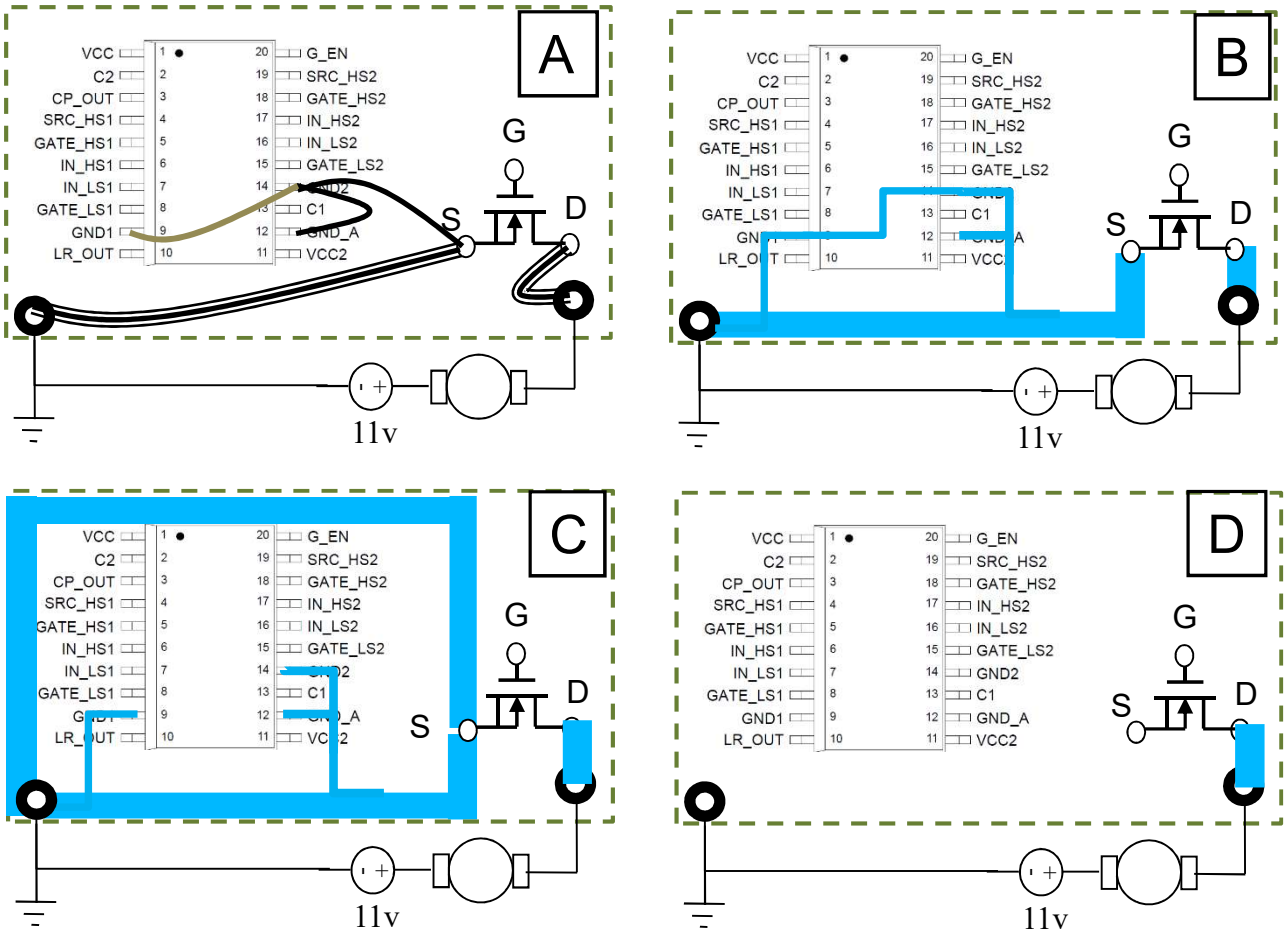

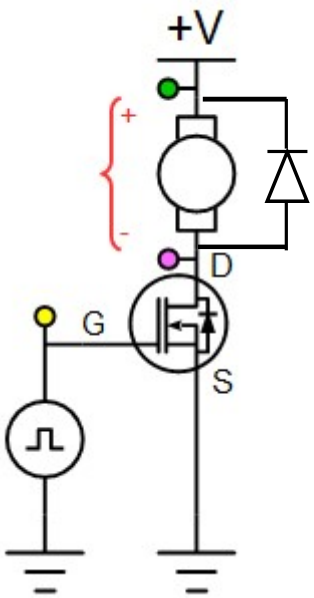

Linear Voltage Regulator

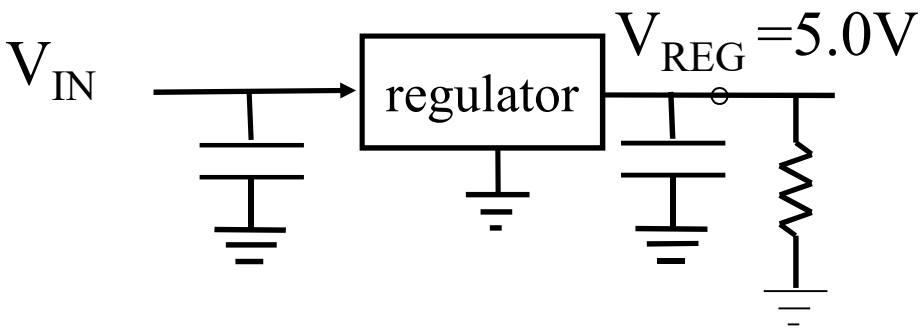

0.5 ohm
(equiv. for 1 amp load)

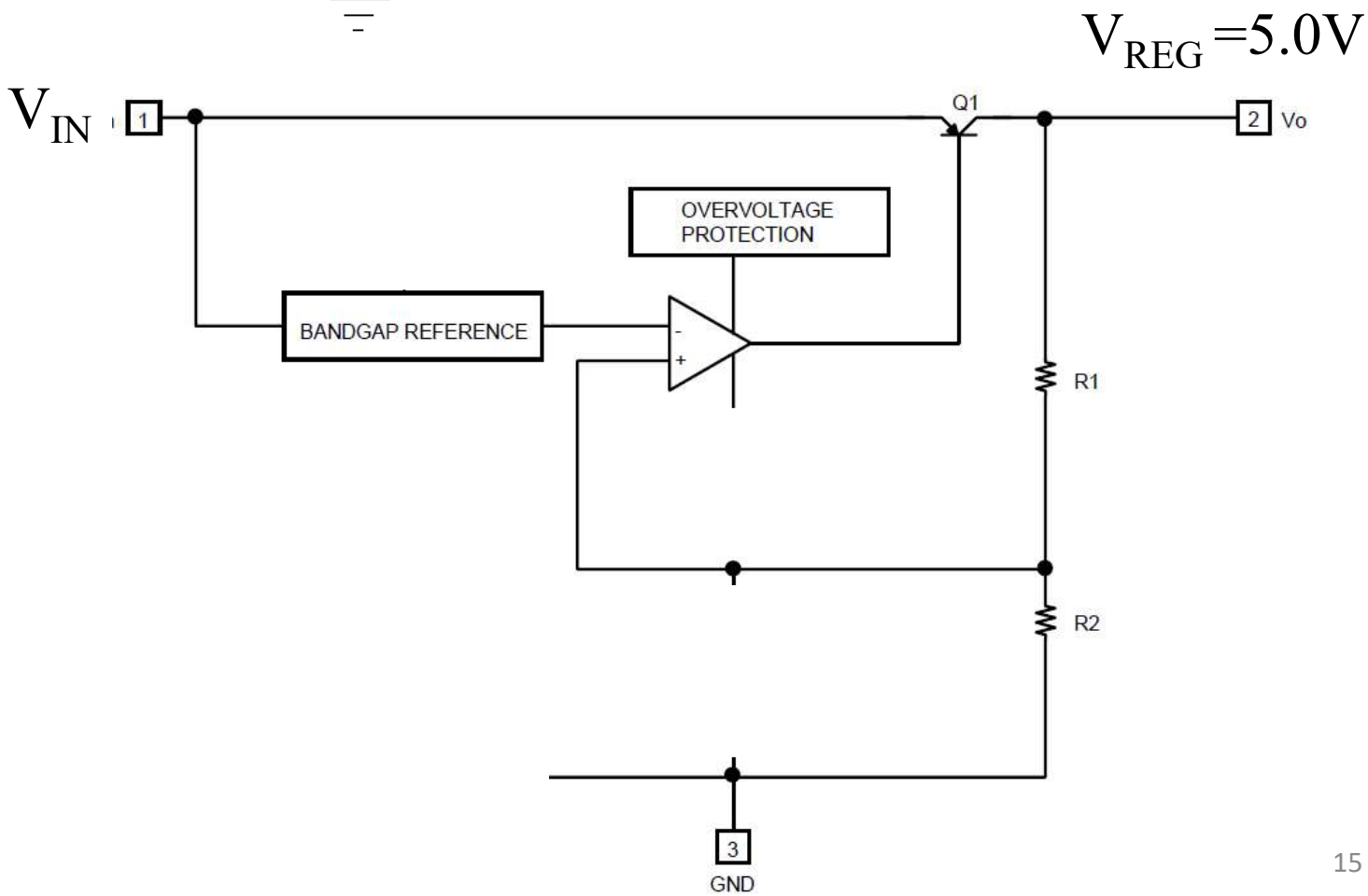

Linear Regulator for RC servo power

- Power limit? Heat….

Caution: caps required for stability for some voltage regulators

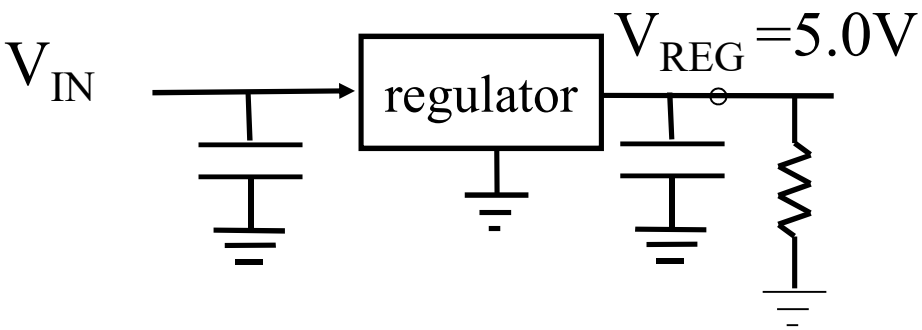

5 ohm
(equiv. for 1 amp load)

P_{diss} =?

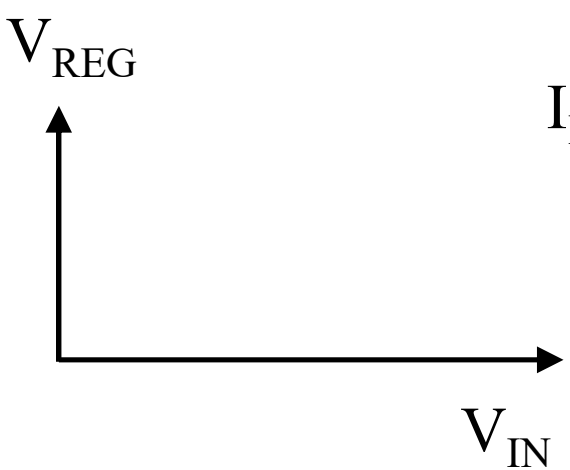

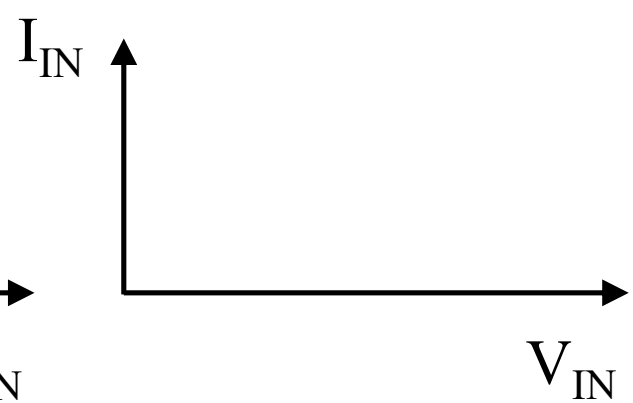

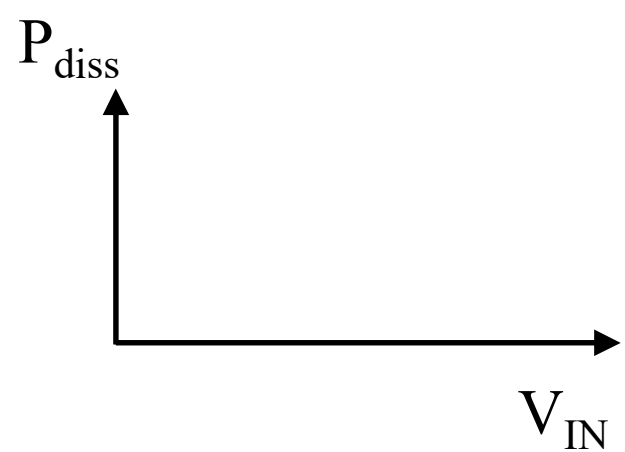

Buck Voltage Convertor

Buck Converter- DC-DC

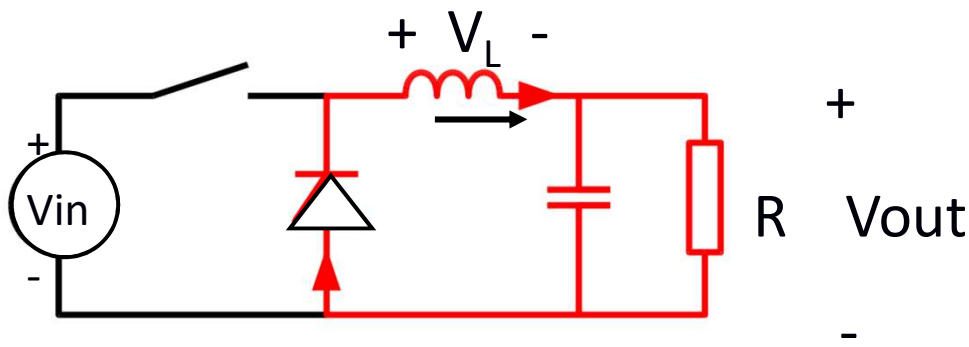

Why? Efficiency ~90%

Waveforms on board (also see buck converter notes.)
Buck: high to low. Boost: low-to-high)

Buck Voltage Convertor

Buck Converter LM2678

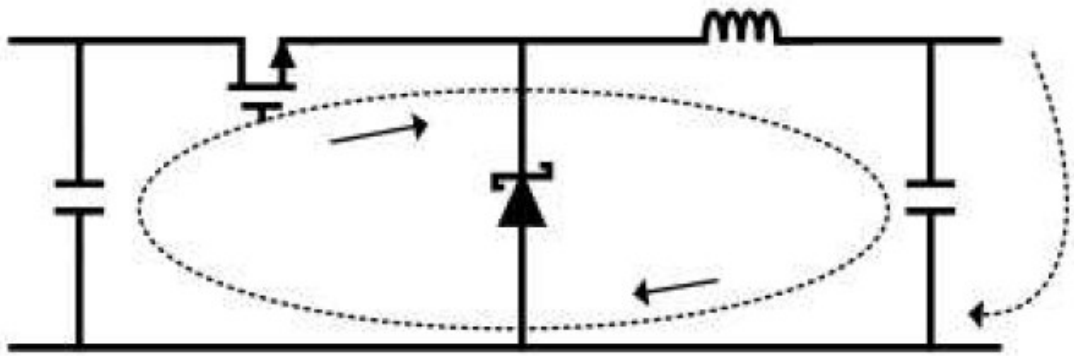

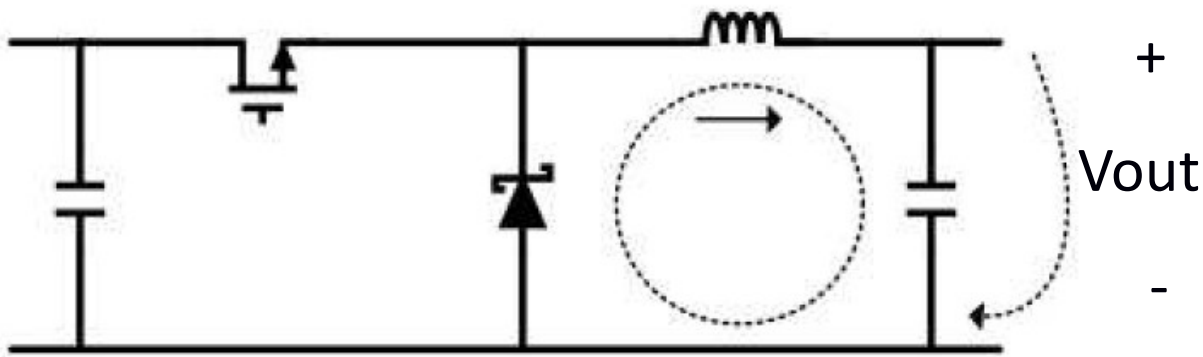

Typical Application

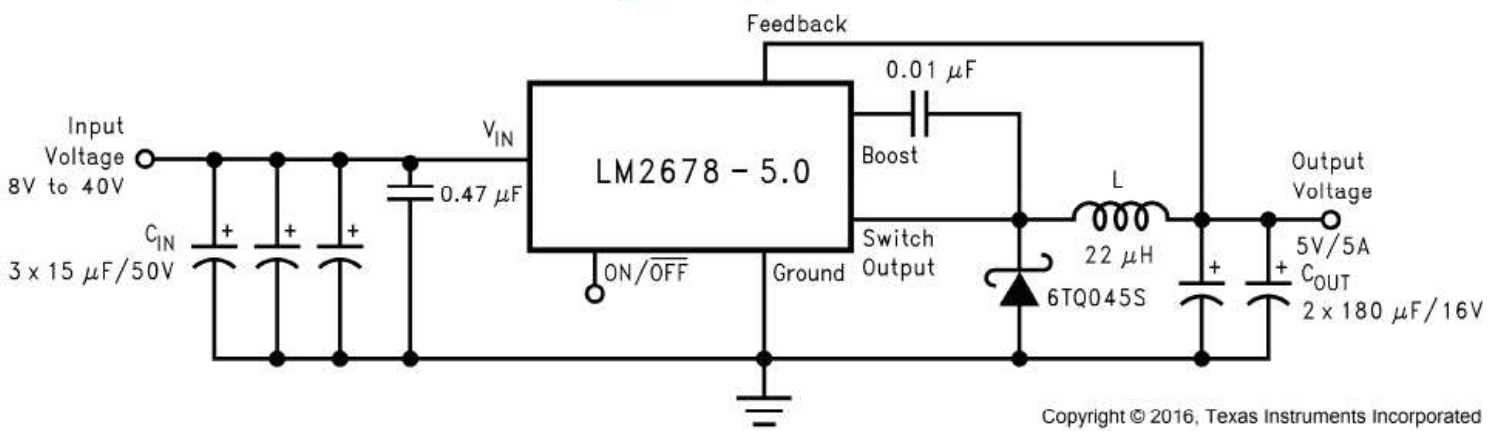

Buck Voltage Convertor

Buck Converter

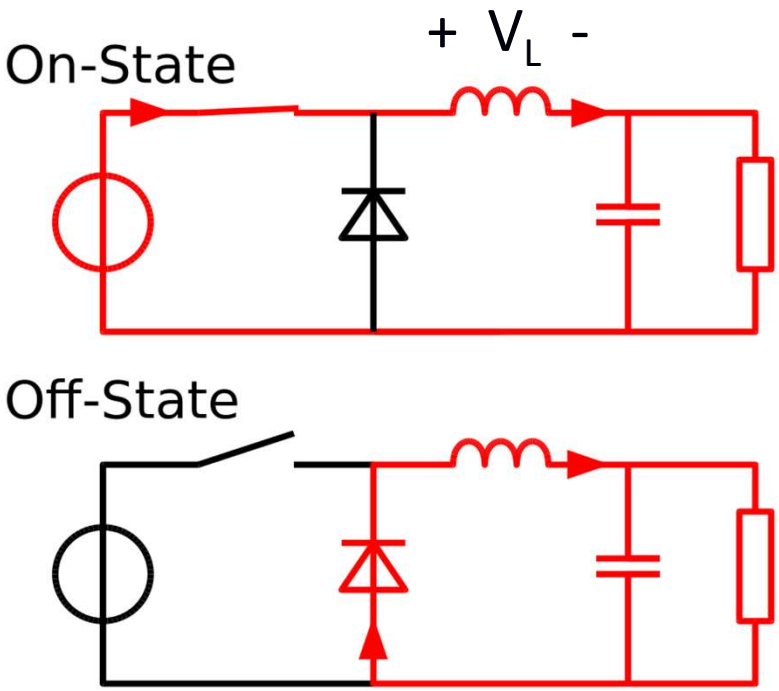

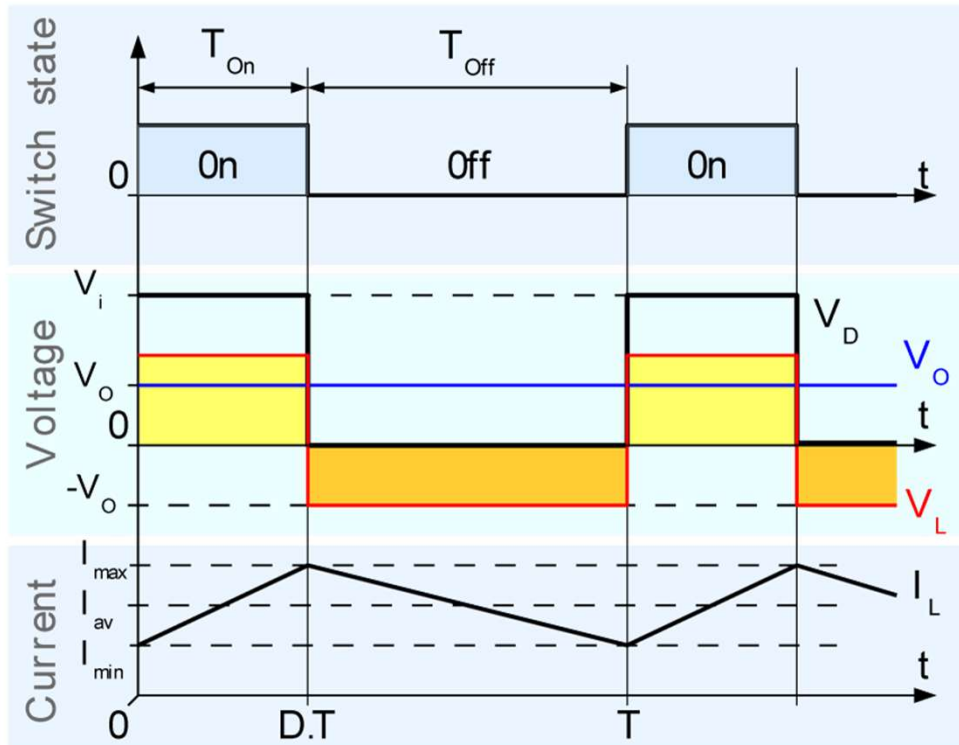

https://en.wikipedia.org/wiki/Buck_converter

Summary

- Wiring to prevent high Vgs
- Wiring to prevent high current through low power devices
- Linear regulator
- Buck converter