EE222 - Spring'16 - Lecture 25 Notes[1]

Murat Arcak

April 28 2016

Case Study: A Vehicle Platoon

Consider a platoon where the velocity of each vehicle is governed by

$$\dot{v}_i = -v_i + v_i^0 + u_i \qquad i = 1, \cdots, N \tag{1}$$

in which u_i is a coordination feedback to be designed and v_i^0 is the (constant) nominal velocity of vehicle i in the absence of such feedback. The position of vehicle i is then obtained from

$$\dot{x}_i = v_i.$$

We will design feedback laws that depend on relative positions with respect to a subset of other vehicles, typically nearest neighbors.

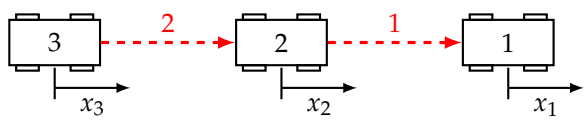

Figure 1: A vehicle platoon.

We introduce an undirected graph where the vertices represent the vehicles and an edge between vertices i and j means that vehicles i and j have access to the relative position measurement $x_i - x_j$. Next we assign an orientation to each edge by selecting one end to be the head and the other to be the tail. Then the *incidence matrix*

$$D_{il} = \begin{cases} 1 & \text{if vertex } i \text{ is the head of edge } l \\ -1 & \text{if vertex } i \text{ is the tail of edge } l \\ 0 & \text{otherwise} \end{cases} \tag{2}$$

generates a vector of relative positions z_l for the edges $l = 1, \cdots, L$ by

$$z = D^T x. \tag{3}$$

As an illustration, in Figure 1,

$$D = \begin{bmatrix} 1 & 0 \\ -1 & 1 \\ 0 & -1 \end{bmatrix} \quad \text{and} \quad \begin{bmatrix} z_1 \\ z_2 \end{bmatrix} = D^T x = \begin{bmatrix} x_1 - x_2 \\ x_2 - x_3 \end{bmatrix}.$$

We propose the feedback law

$$u = -D \begin{bmatrix} h_1(z_1) \\ \vdots \\ h_L(z_L) \end{bmatrix} \tag{4}$$

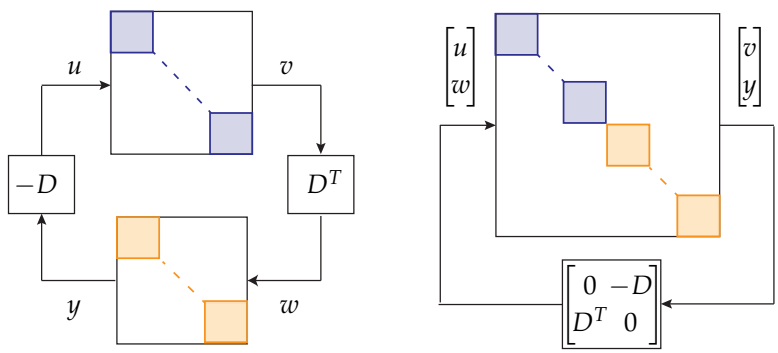

Figure 2: A block diagram for the platoon dynamics. Left: the feed-forward blocks $u_i \mapsto v_i$ represent the velocity dynamics (1) and the feedback blocks $w_l \mapsto y_l$ represent the lth subsystem of the relative position dynamics (6)-(7). Right: the diagram on the left brought to the standard form in Lecture 23 with the interconnection matrix (8).

where each function $h_l : \mathbb{R} \mapsto \mathbb{R}$ is increasing and onto. This means that vehicle i applies the input

$$u_i = -\sum_{l=1}^{L} D_{il} h_l(z_l) \tag{5}$$

which depends on locally available measurements because $D_{il} \neq 0$ when vertex i is the head or tail of edge l. In the case of Figure 1,

$$u_1 = -h_1(z_1) \quad u_2 = h_1(z_1) - h_2(z_2) \quad u_3 = h_2(z_2)$$

where we may interpret $h_1(z_1)$ and $h_2(z_2)$ as virtual spring forces between vehicles 1 and 2, and 2 and 3 respectively.

Note from (3) that

$$\dot{z} = D^T v \triangleq w \tag{6}$$

where we interpret w as an input and define the output

$$y \triangleq \begin{bmatrix} h_1(z_1) \\ \vdots \\ h_L(z_L) \end{bmatrix}. \tag{7}$$

Then the closed-loop system is as in Figure 2 (left) where the feed-forward blocks $u_i \mapsto v_i$ represent the velocity dynamics (1) and the feedback blocks $w_l \mapsto y_l$ represent the lth subsystem of the relative position dynamics (6)-(7).

This block diagram is equivalent to the one in Figure 2(right) which is of the standard form in Lecture 23 with the interconnection matrix

$$M = \begin{bmatrix} 0 & -D \\ D^T & 0 \end{bmatrix}. \tag{8}$$

The skew symmetry of M will allow us to conclude stability from the passivity properties of the subsystems.

Determining the Equilibrium

At equilibrium the right hand side of (6) must vanish, that is

$$D^T v^* = 0. \tag{9}$$

By the definition (2) above, the null space of D^T includes the vector of ones: $D^T \mathbb{1} = 0$. In addition, if the graph is connected then the span of $\mathbb{1}$ constitutes the entire null space: there is no solution to (9) other than $v^* = \alpha \mathbb{1}$ where α is a common platoon velocity.

Setting the right hand side of (1) to zero, we see that the equilibrium value of the inputs u_i must compensate for the variations in the nominal velocities v_i^0 so that a common velocity α can be maintained:

$$-\alpha + v_i^0 + u_i^* = 0 \quad i = 1, \cdots, N. \tag{10}$$

Note that $\sum_{i=1}^N u_i = \mathbb{1}^T u = 0$, which follows from (4) and $\mathbb{1}^T D = 0$. Thus, if we add the equation (10) for $i = 1$ to $i = N$ we get

$$-N\alpha + \sum_{i=1}^N v_i^0 = 0$$

which shows that the common velocity α must be the average $\frac{1}{N}\sum_{i=1}^N v_i^0$.

Substituting this average for α and (5) for u_i^* back in (10) we obtain the following equations for z_l^*:

$$v_i^0 - \frac{1}{N}\sum_{i=1}^N v_i^0 = \sum_{l=1}^L D_{il} h_l(z_l^*) \quad i = 1, \cdots, N.$$

These equations are particularly transparent for a line graph as in Figure 1 where the head and tail of edge l are vertices l and $l+1$:

$$\begin{aligned}
v_1^0 - \frac{1}{N}\sum_{i=1}^N v_i^0 &= h_1(z_1^*) \\
v_i^0 - \frac{1}{N}\sum_{i=1}^N v_i^0 &= -h_{i-1}(z_{i-1}^*) + h_i(z_i^*) \quad i = 2, \cdots, N-1 \\
v_N^0 - \frac{1}{N}\sum_{i=1}^N v_i^0 &= -h_{N-1}(z_{N-1}^*).
\end{aligned}$$

Adding equations $i = 1$ to l we get a new equation that depends only on $h_l(z_l^*)$. Then a solution z_l^* exists since $h_l(\cdot)$ is onto, and is unique since $h_l(\cdot)$ is increasing. A similar argument may be developed for other acyclic graphs.

Stability Analysis

To analyze the stability of the equilibrium characterized above, we define the shifted state variables

$$\tilde{v}_i \triangleq v_i - \alpha \qquad \tilde{z}_l \triangleq z_l - z_l^*$$

so that, at equilibrium $\tilde{v}_i = 0$ and $\tilde{z}_l = 0$.

From (1) and (10),

$$\dot{\tilde{v}}_i = -v_i + v_i^0 + u_i = -\tilde{v}_i + \tilde{u}_i \tag{11}$$

which is output strictly passive with input $\tilde{u}_i \triangleq u_i - u_i^*$ and output $\tilde{v}_i$, since the storage function

$$V_i(\tilde{v}_i) = \frac{1}{2}\tilde{v}_i^2$$

satisfies

$$\dot{V}_i = -\tilde{v}_i^2 + \tilde{v}_i\tilde{u}_i.$$

Likewise, from (6)-(7),

$$\dot{\tilde{z}}_l = w_l \tag{12}$$

which is passive with input w_l and output:

$$\tilde{y}_l \triangleq h_l(z_l) - h_l(z_l^*).$$

To see this, take the storage function

$$W_l(\tilde{z}_l) = \int_0^{\tilde{z}_l} [h_l(z_l^* + \sigma) - h_l(z_l^*)]d\sigma$$

which satisfies

$$\dot{W}_l = [h_l(z_l) - h_l(z_l^*)]w_l = \tilde{y}_l w_l.$$

It follows from the skew symmetry of the interconnection matrix M and the passivity of the subsystems (see Lecture 24) that the origin $\tilde{v}_i = 0$ and $\tilde{z}_l = 0$ is stable and a Lyapunov function is

$$\sum_{i=1}^{N} V_i(\tilde{v}_i) + \sum_{l=1}^{L} W_l(\tilde{z}_l).$$