Filter Specs

Mar. 5, 2008

Ex 1-D

Low pass filter

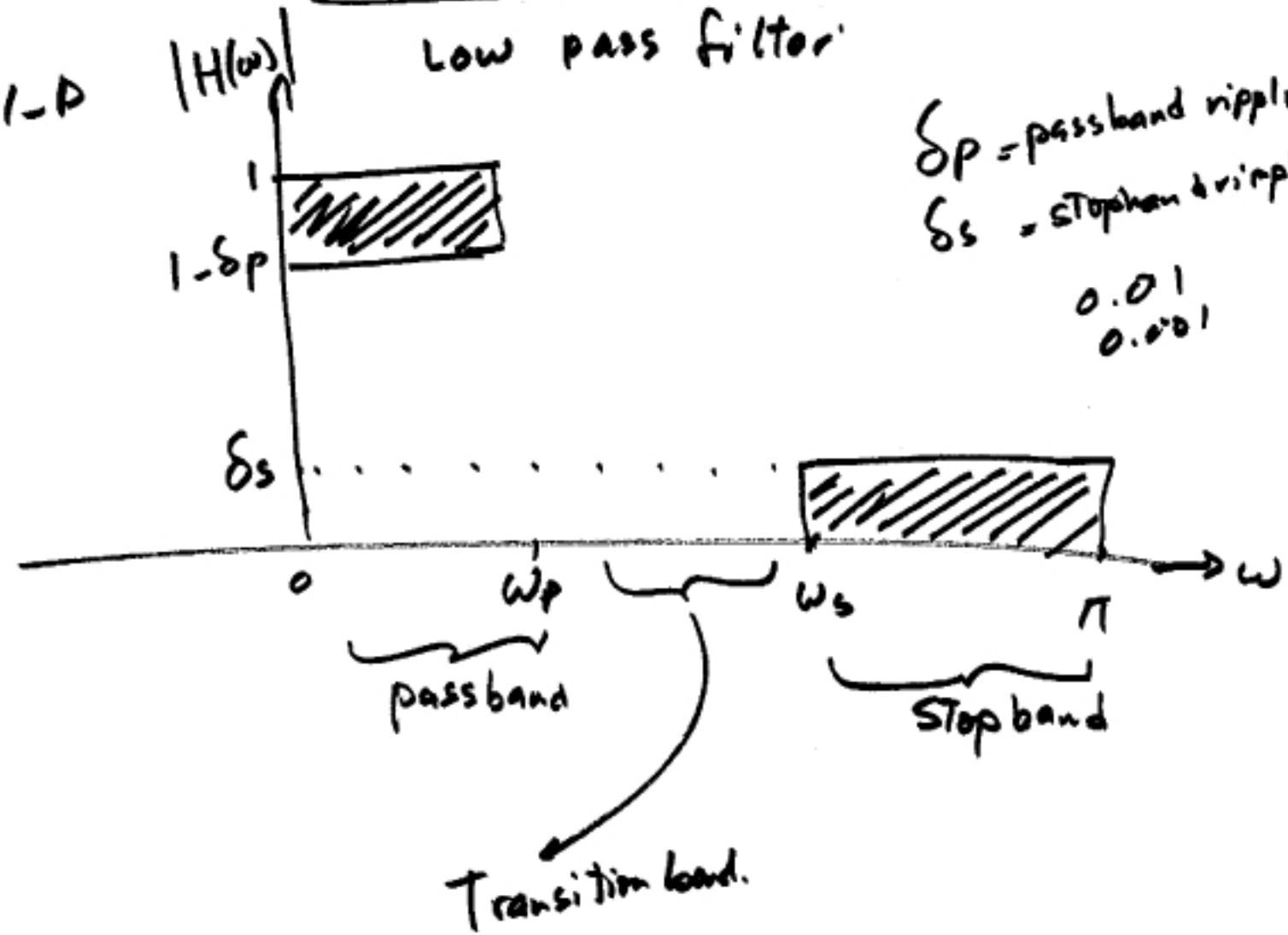

δ_p = passband ripple

δ_s = stopband ripple.

0.01

0.001

2D specs

low Pass filter in 2D.

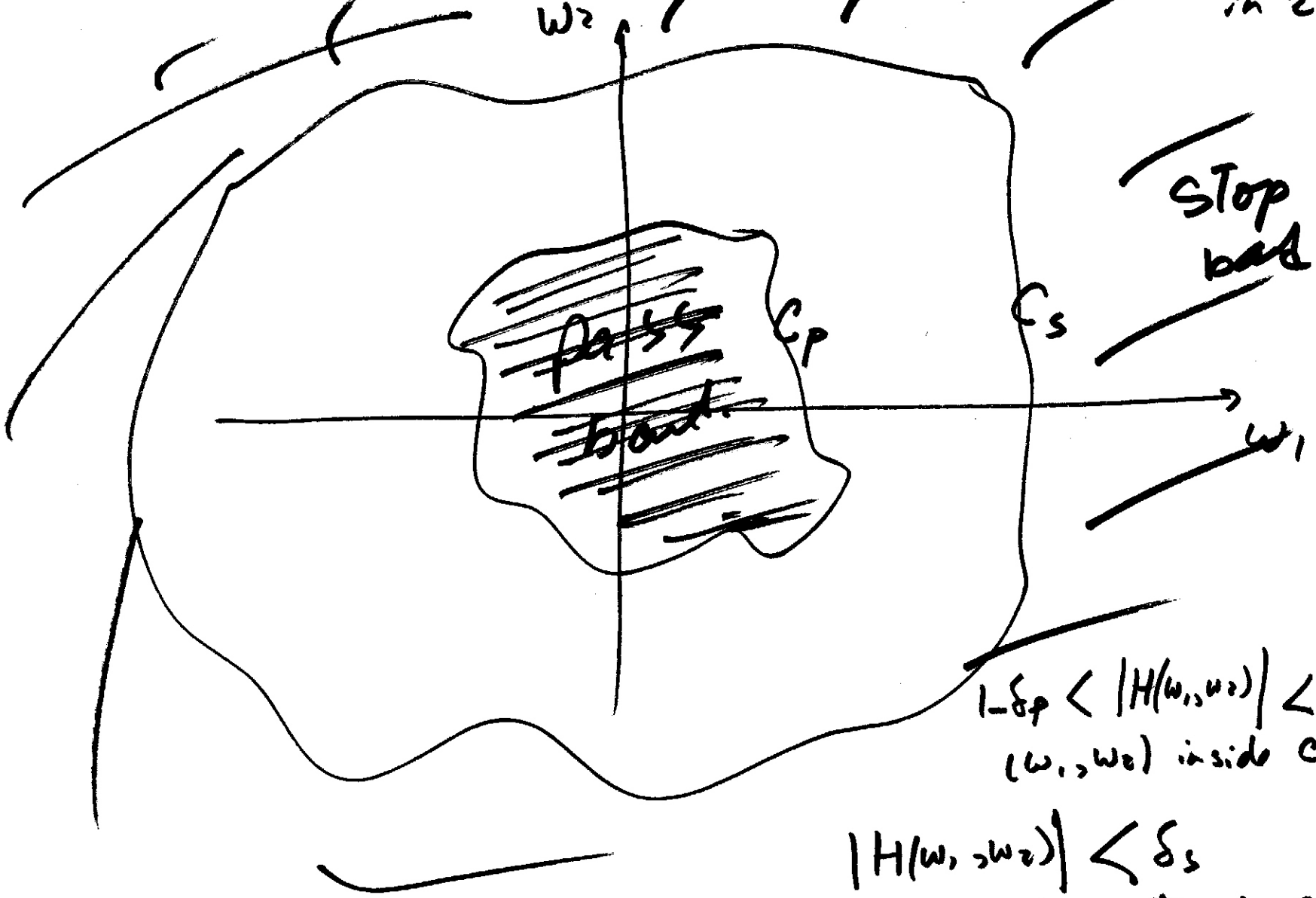

$1-\delta_p < |H(\omega_1,\omega_2)| < 1$

(ω_1,ω_2) inside C_p

$|H(\omega_1,\omega_2)| < \delta_s$

(ω_1,ω_2) outside C_s

Band Pass filters

1D

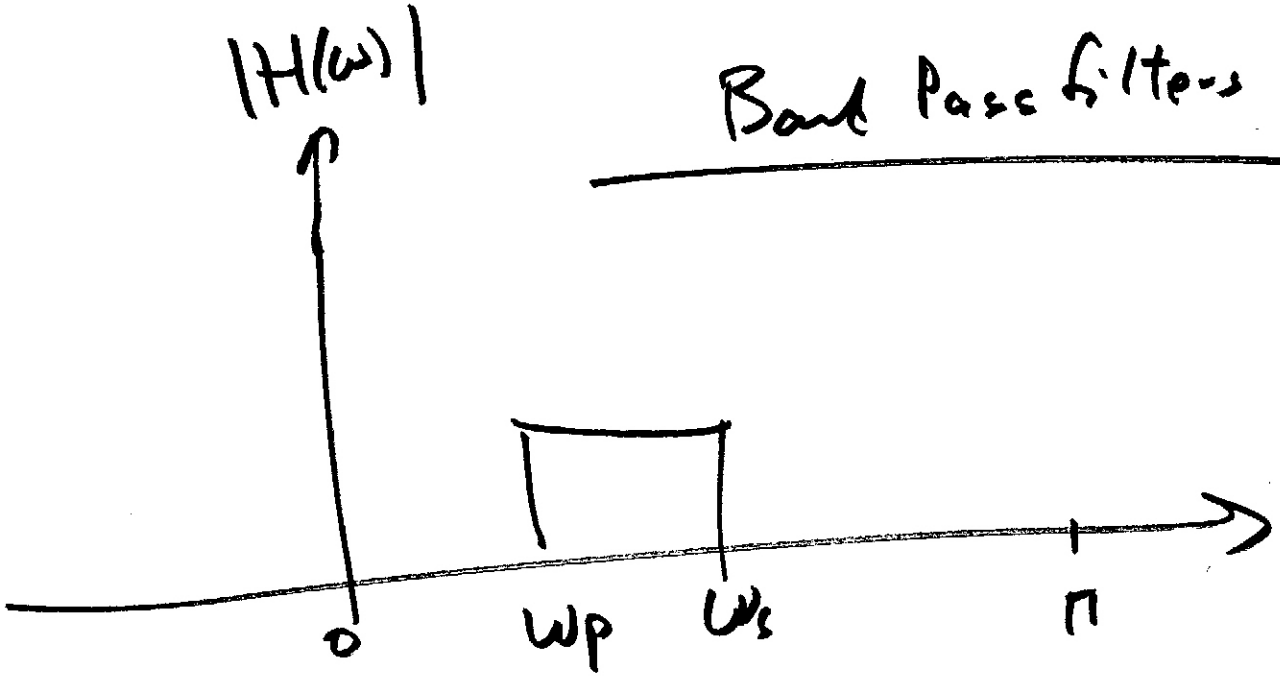

2D

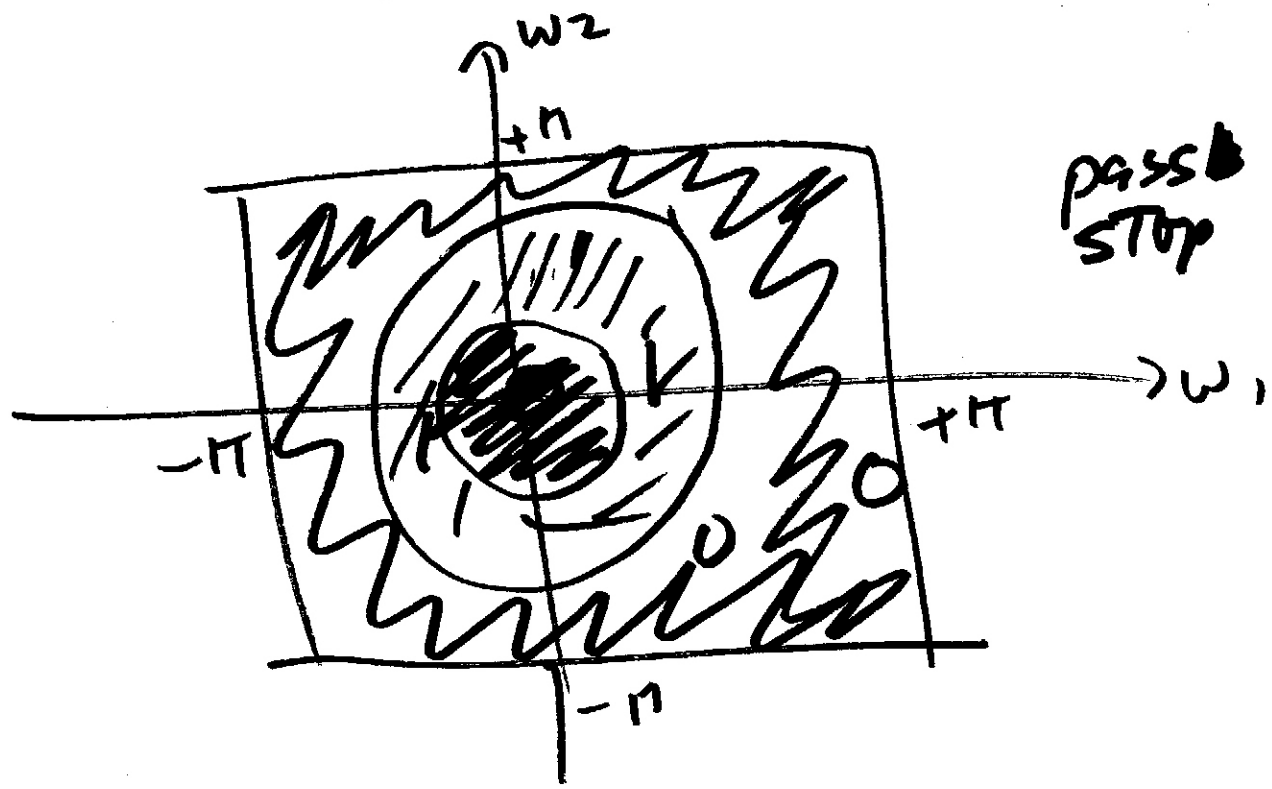

passb green
stop Red

Directional Filters

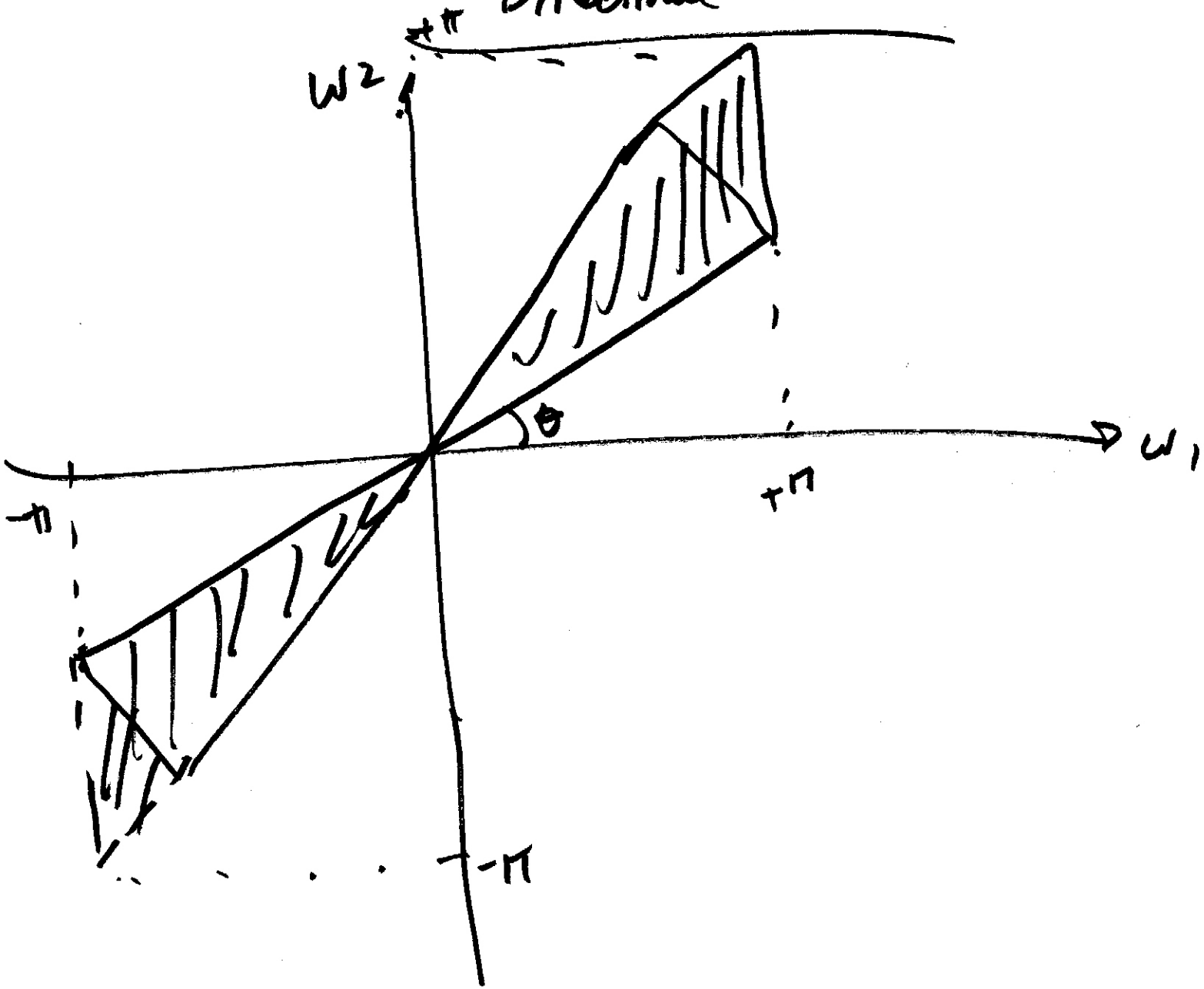

3 ways of designing FIR Filters

1. Window. 1D $\longrightarrow$ 2D.
2. Frequency sampling 1D $\longrightarrow$ 2D.
3. Design by Transformation : McClellan.

Window

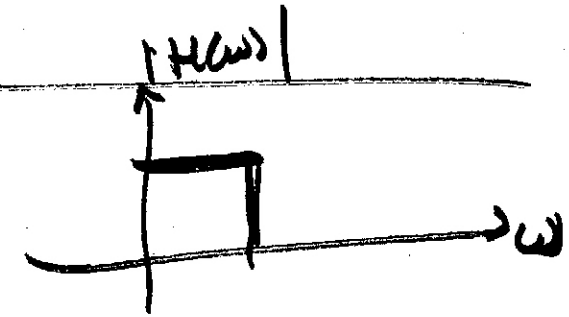

1. Start with ideal freq. response $H_d(\omega)$

2. take inverse DTFT. $h_d(n) \longrightarrow$ sinc.
   ∞ly long $\longrightarrow$ IIR.

   $h_d(n)$

3. $h(n) = w(n)\, h_d(n)$

   $w(n) \longrightarrow$ window fn.

$$h(n_1, n_2) = W(n_1, n_2)\, h_d(n_1, n_2)$$

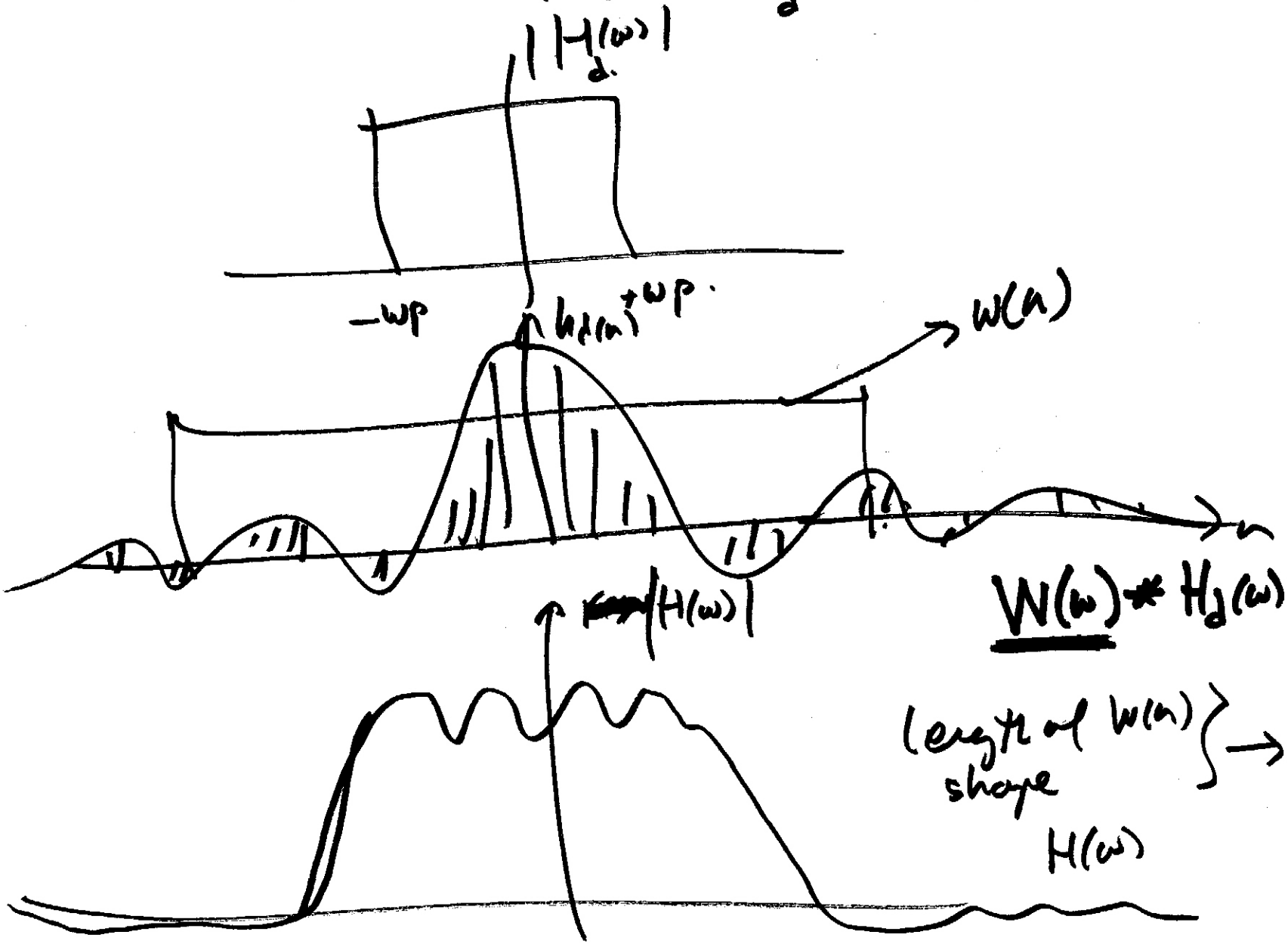

2D windows

$$H(\omega) = |H(\omega)|\, e^{j\phi(\omega)}$$

linear phase $\phi(\omega)$ is linear in ω $\longrightarrow$

Zero phase $\phi(\omega)$ is zero

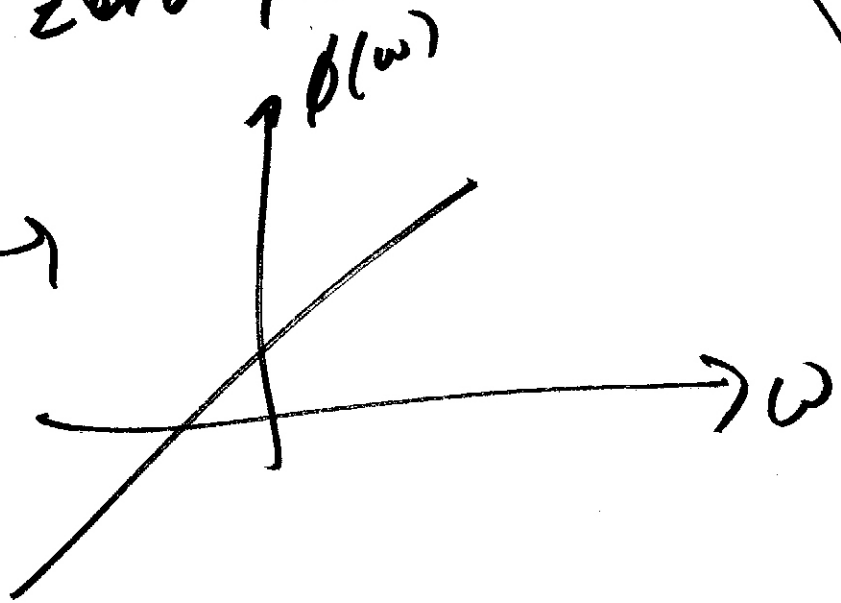

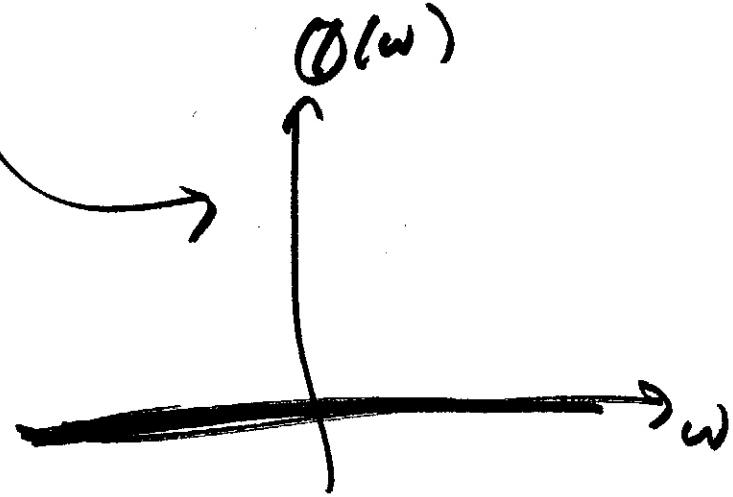

$$h(n_1, n_2) = h_d(n_1, n_2)\, W(n_1, w_2)$$

desired impulse response

zero phase window

If h_d is zero phase
If W " " "
$\Big\} \longrightarrow h(n_1, n_2)$ is zero phase

Kaiser window :

$$W_\alpha(t) = \begin{cases} \dfrac{I_0\left(\alpha\sqrt{1-\left(\frac{t}{\tau}\right)^2}\right)}{I_0(\alpha)} & |t| \tau \\ 0 & \text{otherwise.} \end{cases}$$

duration $\approx 2\tau$

α = knob Trade off main lobe width with sidelobe height

$I_0(x)$ modified path order Bessel fn.

$$I_0(x) = \sum_{i=0}^{\infty} \frac{x^{2i}}{2^{2i}\,(i!)^2}$$

2D Window

(1) Continuous Time 2D window.

$$W_a(t_1, t_2) = W_a(t_1)\, W_a(t_2)$$

(2) - sample this to make it discrete. $(n_1, n_2) \in R_w$

$$W(n_1, n_2) = \begin{cases} W_a(t_1, t_2)\Big|_{t_1 = n_1,\ t_2 = n_2} & \\ 0 & \text{Otherwise} \end{cases}$$

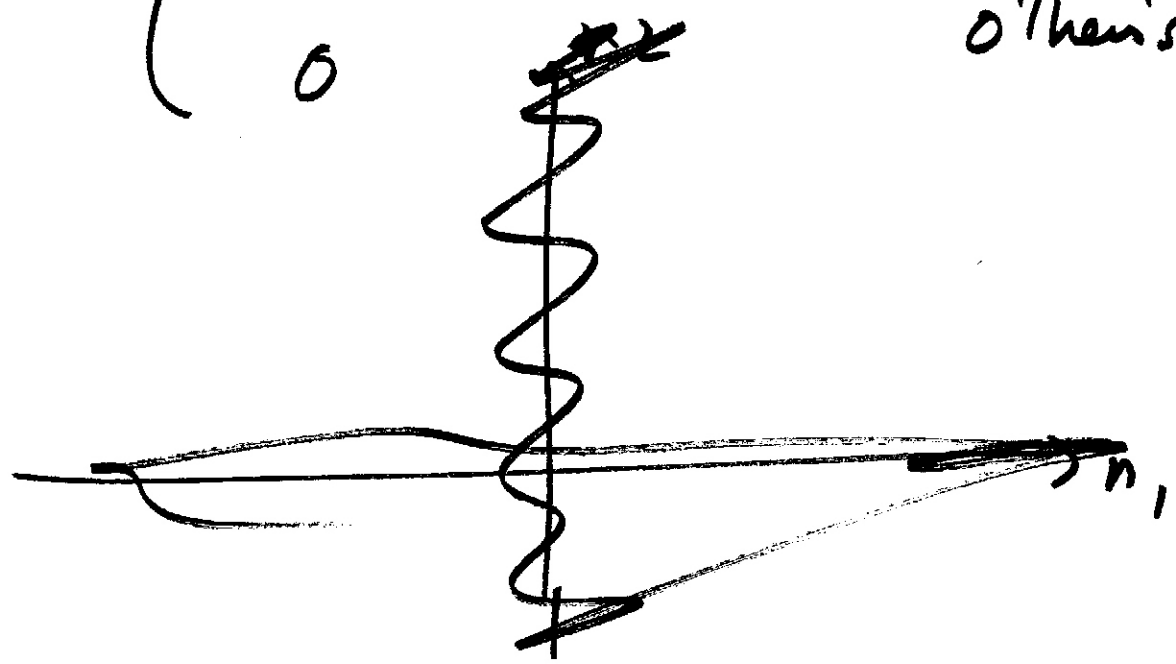

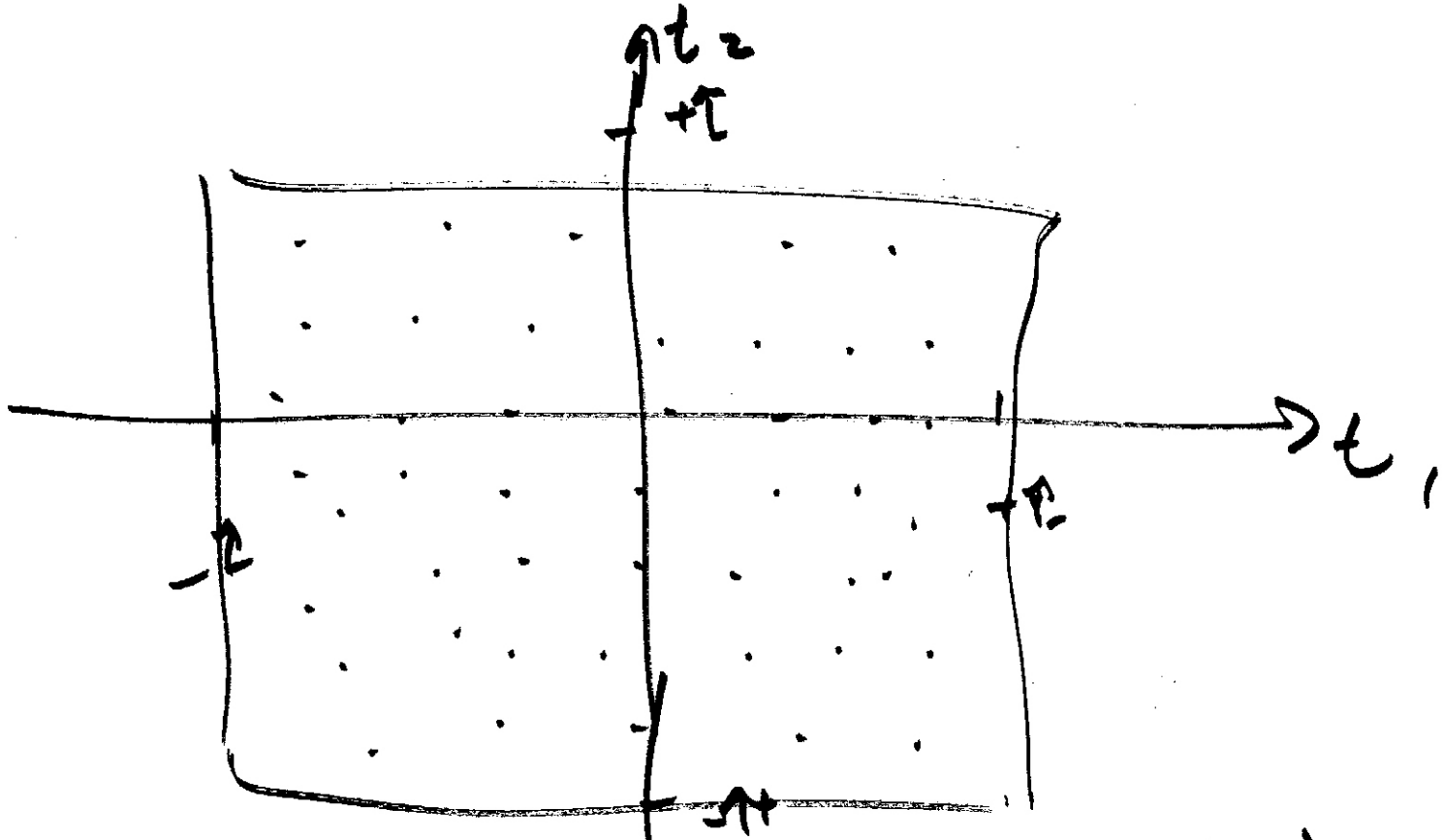

$$W(n_1, n_2) = W_a(n_1)\, W_a(n_2)$$

sampled version of $W_a(t)$.

$$W(\omega_1, \omega_2) = W_a(\omega_1)\, W_b(\omega_2)$$

"

Another way 2D windows

Rotate $w_a(t)$ to get $w_a(t_1, t_2)$

Sample $w_a(t_1, t_2)$ to get $w(n_1, n_2)$

$$w_a(t_1, t_2) = w_a(t) \Big|_{t = \sqrt{t_1^2 + t_2^2}}$$

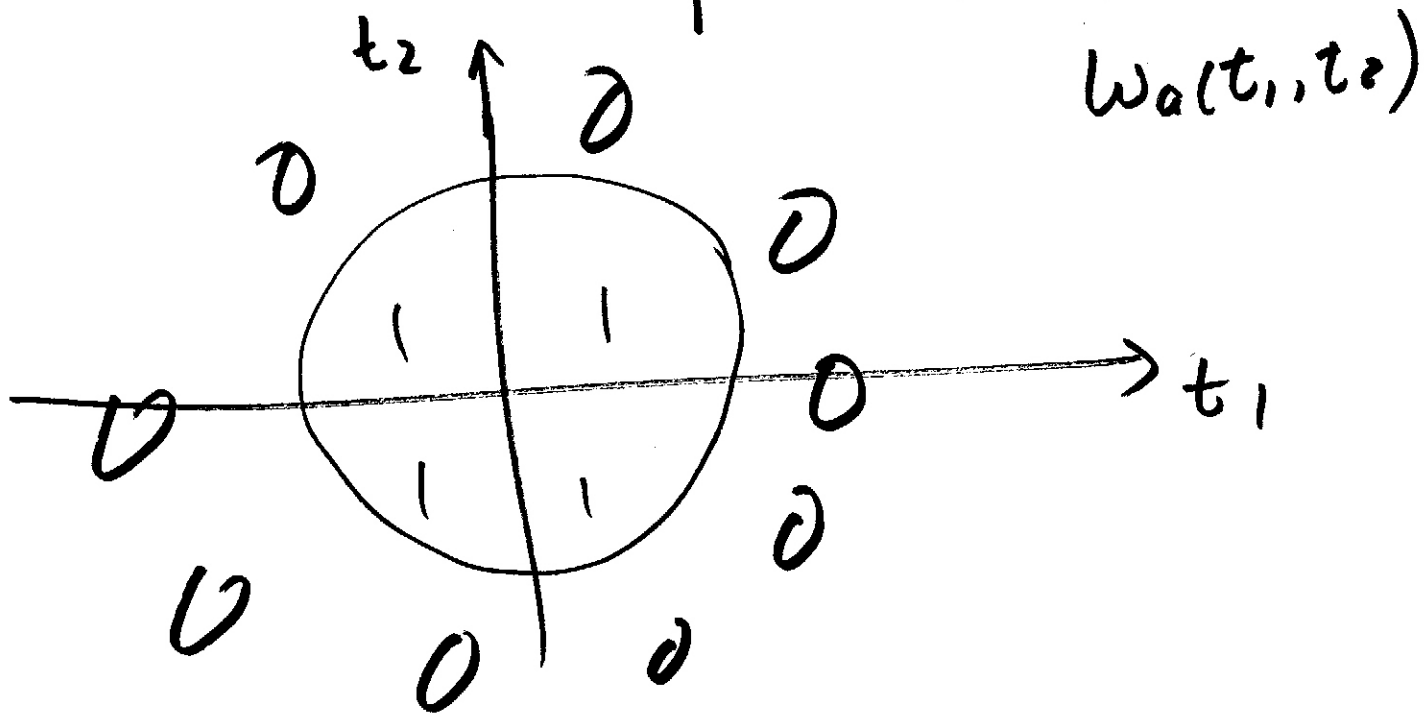

$$W(n_1, n_2) = \begin{cases} W_a(t_1, t_2)\Big|_{\substack{t_1 = n_1 \\ t_2 = n_2}} & (n_1, n_2) \in R_W \\ 0 & \text{otherwise} \end{cases}$$

circularly symmetric window

Show pictures from J. Lim

4.5 → 4.9

Freq. Sampling Technique

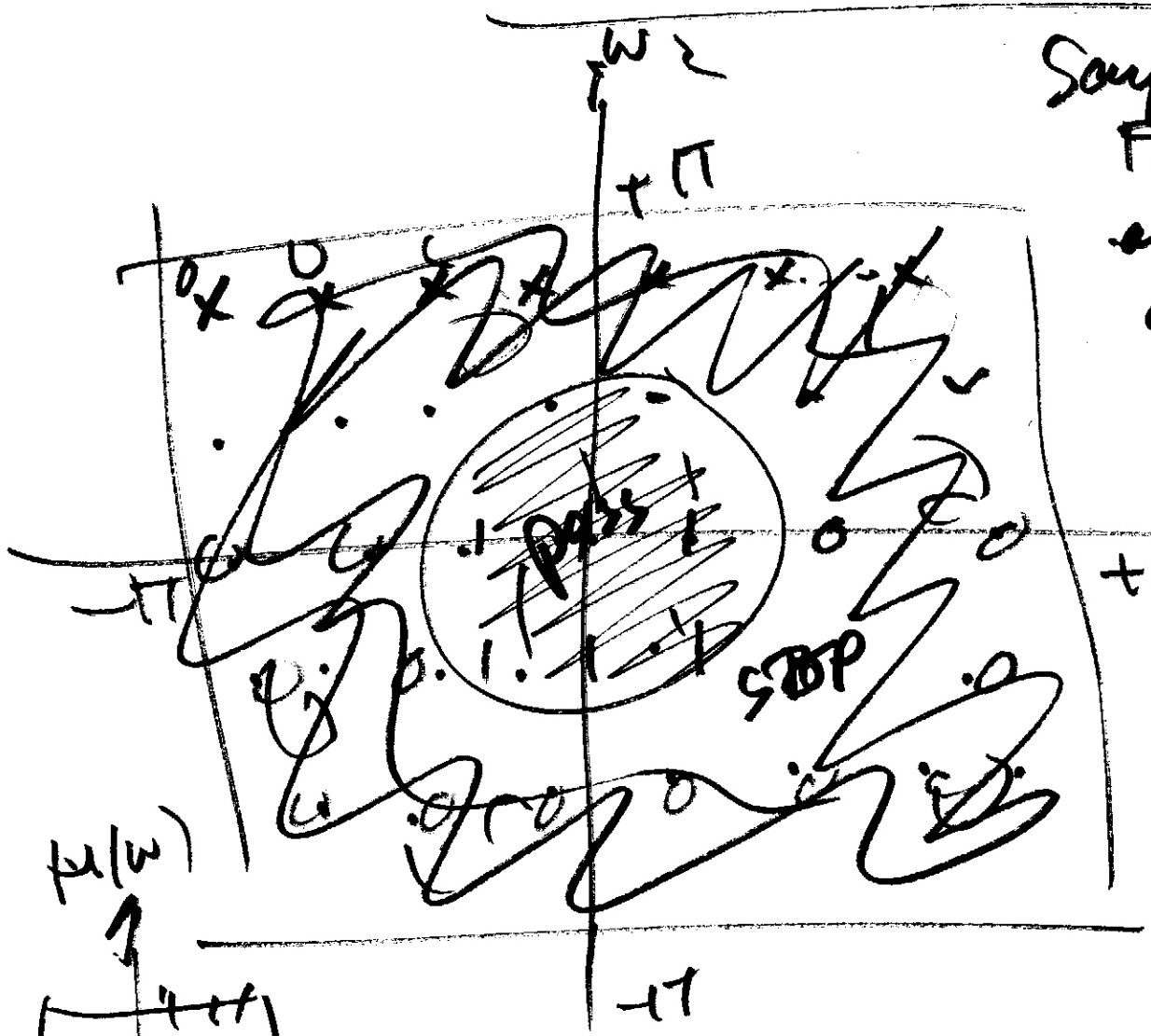

Sample 2D Fourier space on a M×M equally spaced points.

IDFT

↓

M×M FIR filter.

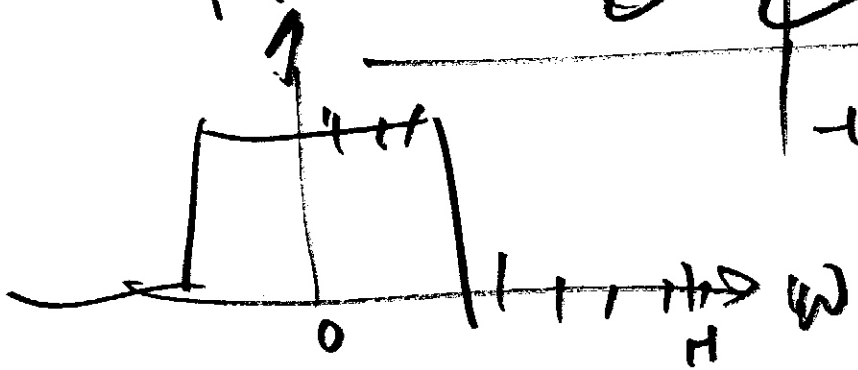

Fig. 4.10 → 4.11

2D Filter Design using Transformation

Idea: $H(\omega_1, \omega_2) = \left[H(\omega) \right]_{\omega = G(\omega_1, \omega_2)}$

$$H(\omega_1, \omega_2) = \left[H(\omega) \right]_{\cos\omega = T(\omega_1, \omega_2)}$$

Q: ① How to design $T(\omega_1, \omega_2)$

② How to design $H(\omega)$ ← optimal.

How to make $H(\omega)$ in 1-D be zero phase?

If Filter is zero phase

$H(\omega) = |H(\omega)| e^{j\phi(\omega)}$ $\quad \phi(\omega) = 0 \quad \forall \omega$

$\Rightarrow H(\omega) = H^*(\omega) \Longrightarrow h(n) = h^*(-n)$

assume $h(n)$ has real coeff

$\Rightarrow h(n) = h(-n)$.

Zero phase in 1D $\Longrightarrow$ $h(n) = h(-n)$

Assume $H(\omega)$ is zero phase

$h(n) = h(-n)$

$h(n)$ has $2N+1$ sample.

$$H(\omega) = \sum_{n=-N}^{+N} h(n)\, e^{-j\omega n}$$

zero phase

$$= h(0) + \sum_{n=1}^{N} 2h(n)\cos(\omega n)$$

$$H(\omega) = \sum_{n=0}^{N} a(n) \cos(\omega n)$$

$$H(\omega) = \sum_{n=0}^{N} b(n) (\cos\omega)^n$$

Chebychev polynomial

$$\cos(2\omega) = \cos(\omega+\omega) = 2\cos^2\omega - 1$$

$$\cos(3\omega) = \cos(\omega + 2\omega) = 2\cos^3\omega - \cos\omega$$

$$-2(1-\cos^2\omega)\cos\omega$$

$$H(\omega_1,\omega_2) = \left[H(\omega)\right]_{\cos\omega = T(\omega_1,\omega_2)}$$

$$H(\omega_1,\omega_2) = \sum_{n=0}^{N} b(n) \left[T(\omega_1,\omega_2)\right]^n$$

Can show: if $T(\omega_1, \omega_2)$ is zero phase

and $H(\omega)$ is zero-phase

Then $\longrightarrow$ $H(\omega_1, \omega_2)$ will be zero phase.

Suppose $T(\omega_1, \omega_2)$ is freq. response

$t(n_1, n_2) \longleftarrow (2M+1) \times (2M+1)$

$H(\omega) \longleftarrow 2N+1$ point.

$$T(\omega_1, \omega_2) = \sum_{n_1=-M}^{+M} \sum_{n_2=-M}^{+M} t(n_1, n_2)\, e^{-j\omega_1 n_1}\, e^{-j\omega_2 n_2}$$

$$H(\omega_1,\omega_2) = \sum_{n=0}^{N} b(n) \left(\sum_{n_1=-M}^{+M} \sum_{n_2=-M}^{+M} t(n_1,n_2) e^{-j\omega_1 n_1} e^{-j\omega_2 n_2} \right)^n$$

$$H(\omega_1,\omega_2) = \sum_{n_1=-NM}^{+NM} \sum_{n_2=-NM}^{+NM} h(n_1,n_2) e^{-j\omega_1 n_1} e^{-j\omega_2 n_2}$$

$$(2NM+1) \times (2NM+1)$$

$M=1 \rightarrow t(n_1,n_2) : 3\times 3$

$N=10 \rightarrow h(n) : 21$ pt

$\rightarrow h(n_1,n_2)$

21×21

Steps for 2D Filter using Transformation

1. Start with specs in 2D
2. Either choose or design $t(n_1, n_2)$
3. Derive specs for $H(\omega)$ from specs in 2D for $H(\omega_1, \omega_2)$ and given $t(n_1, n_2)$

   $\omega_s, \omega_p, \delta_s, \delta_p$ for $H(\omega)$
4. Design $H(\omega)$, $h(n)$ (optimal filter design)
5. Combine $h(n)$ and $t(n_1, n_2)$ to get $h(n_1, n_2)$ $\quad H(\omega_1, \omega_2) = \left[H(\omega)\right]_{\cos\omega = T(\omega_1, \omega_2)}$

Mc Clula Transformation

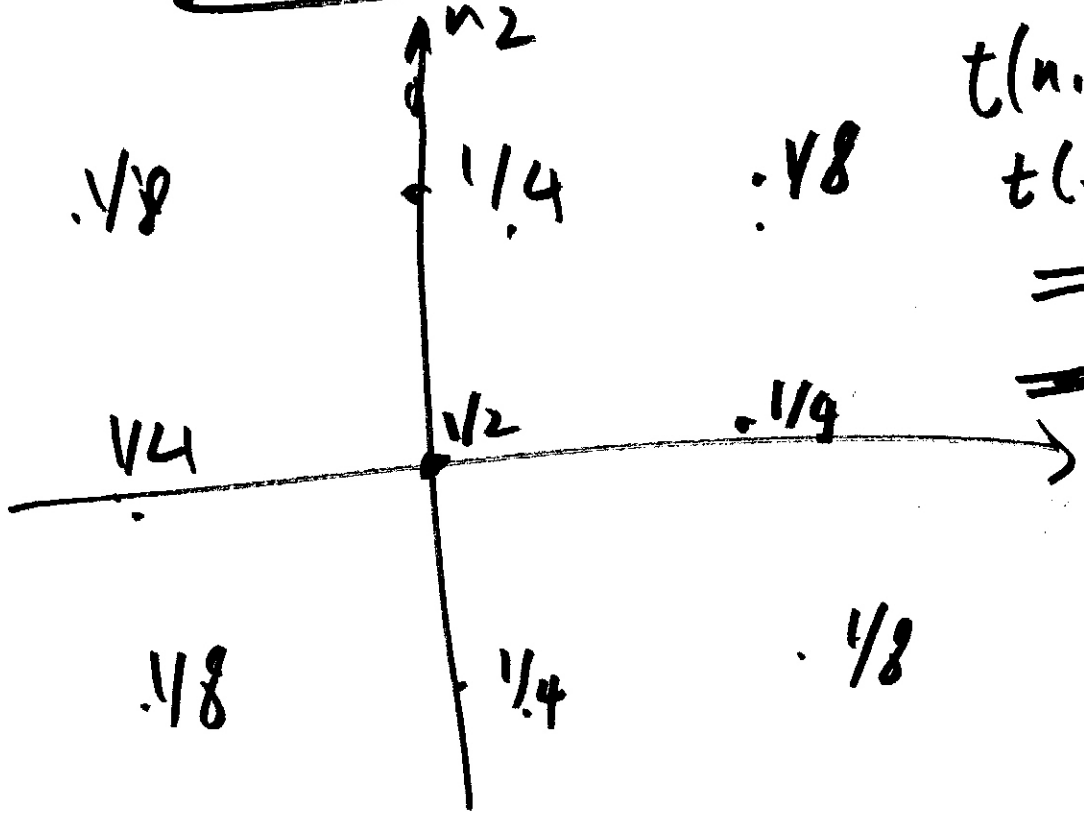

$t(n_1, n_2) =$
$t(-n_1, -n_2)$
$\Rightarrow$ geo phase

4 fold symmetry

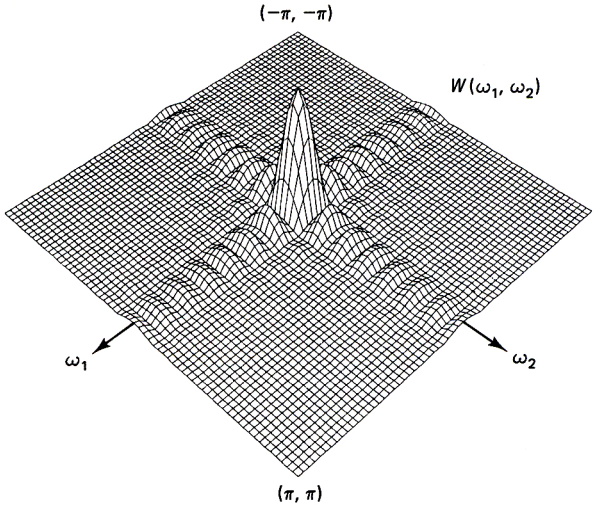

(a)

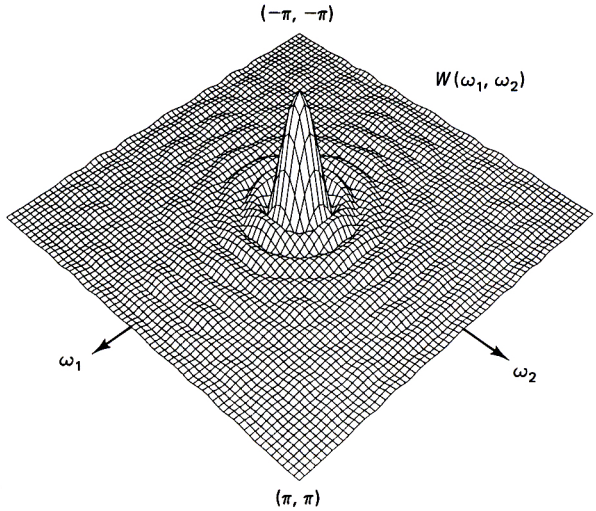

(b)

Figure 4.5 Fourier transform of (a) separable window and (b) circularly symmetric window obtained from the analog rectangular window with $\tau = 8$.

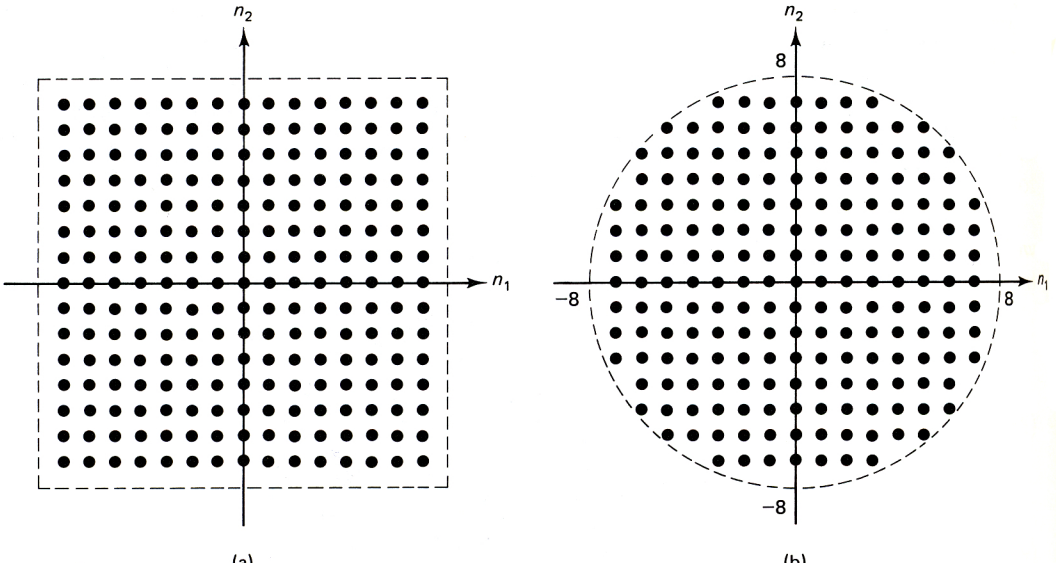

Figure 4.6 Support region of $w(n_1, n_2)$ for $\tau = 8$. (a) Separable window; (b) circularly symmetric window.

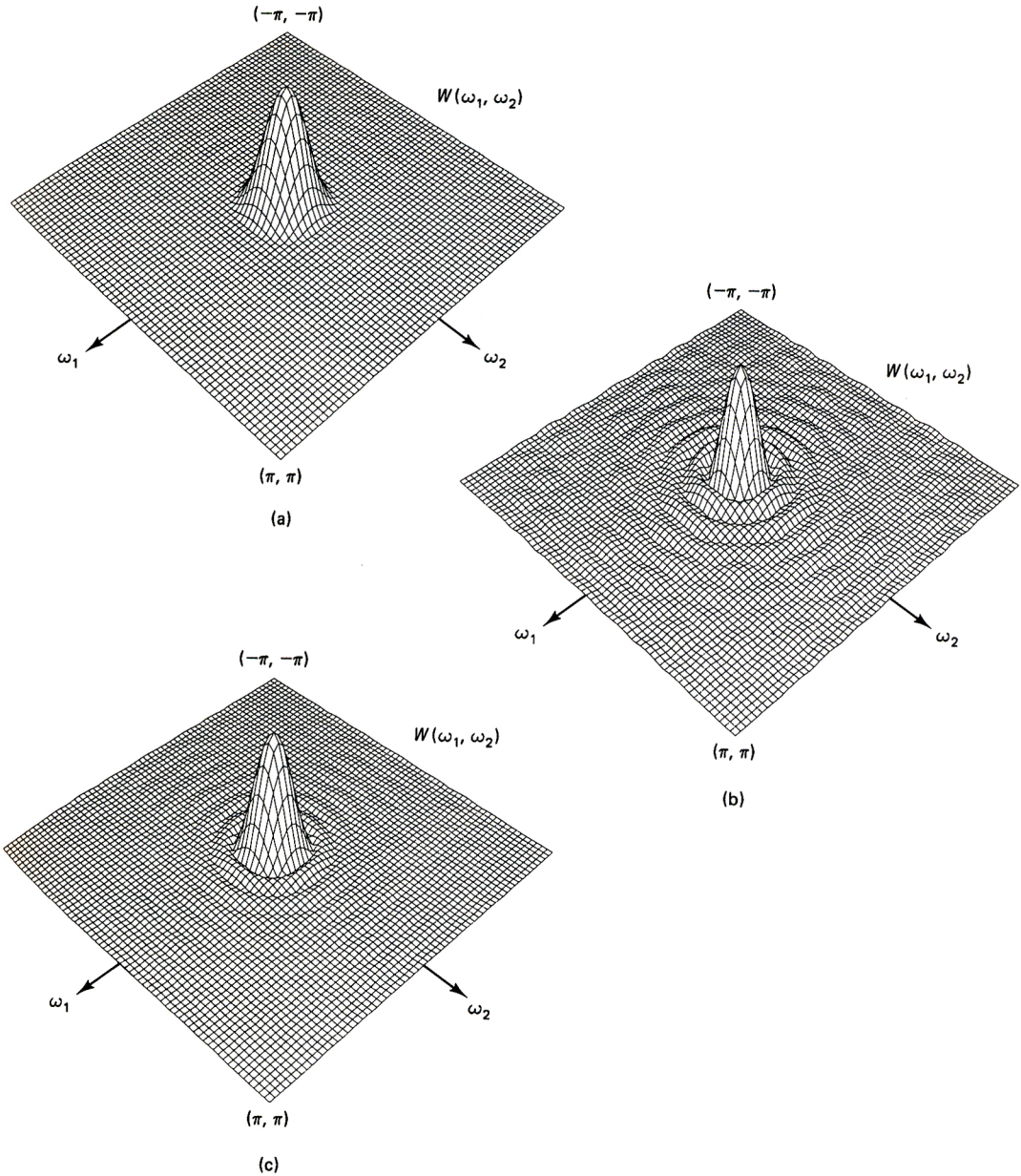

Figure 4.7 Fourier transform of circularly symmetric windows with $\tau = 8$. (a) Hamming window; (b) Kaiser window with $\alpha = 1$; (c) Kaiser window with $\alpha = 3$.

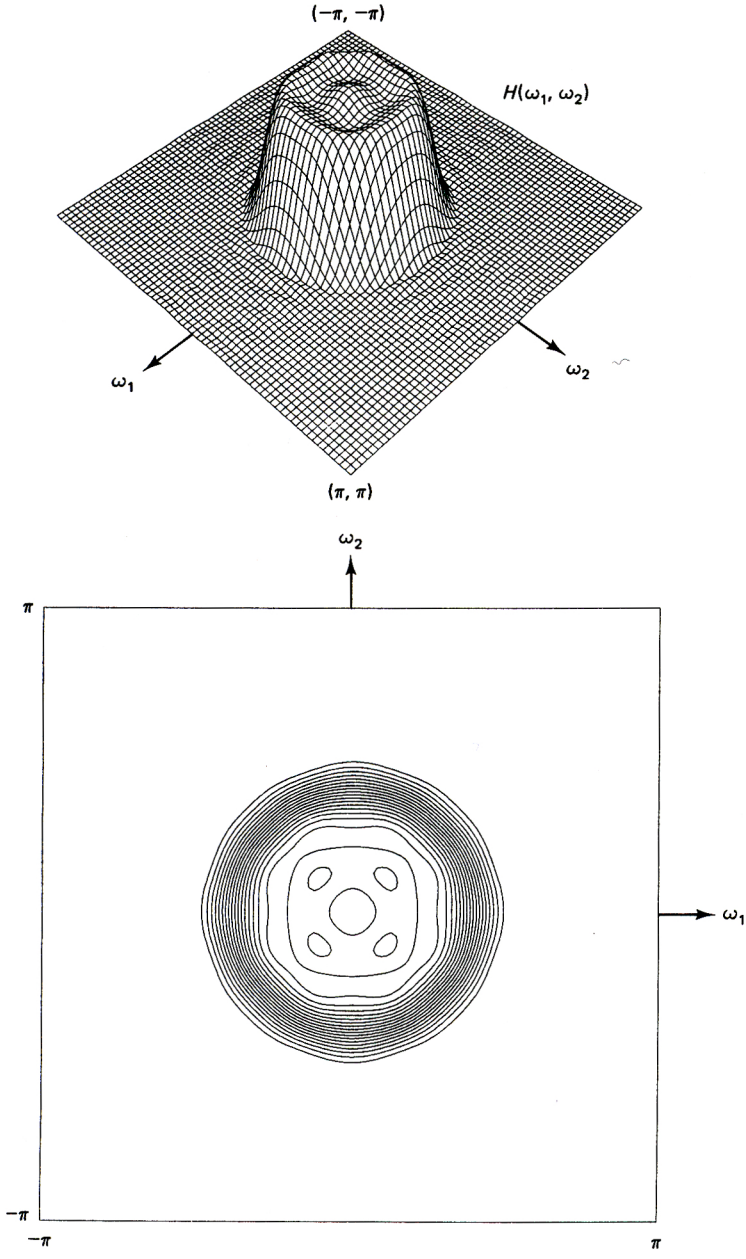

(a)

Figure 4.8 Frequency responses of lowpass filters designed by the window method. The desired impulse response was obtained by using (4.10a) with $R = 0.4\pi$. The 1-D Kaiser window was used. The support regions of the windows are those shown in Figure 4.6. Both perspective and contour plots are shown. (a) Separable window design; (b) rotated circularly symmetric window design.

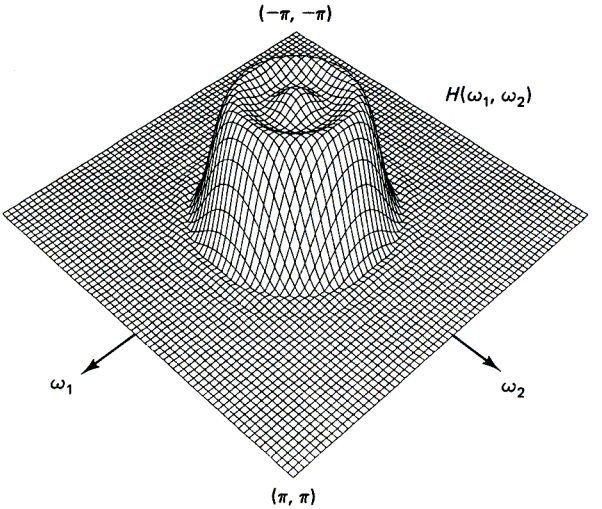

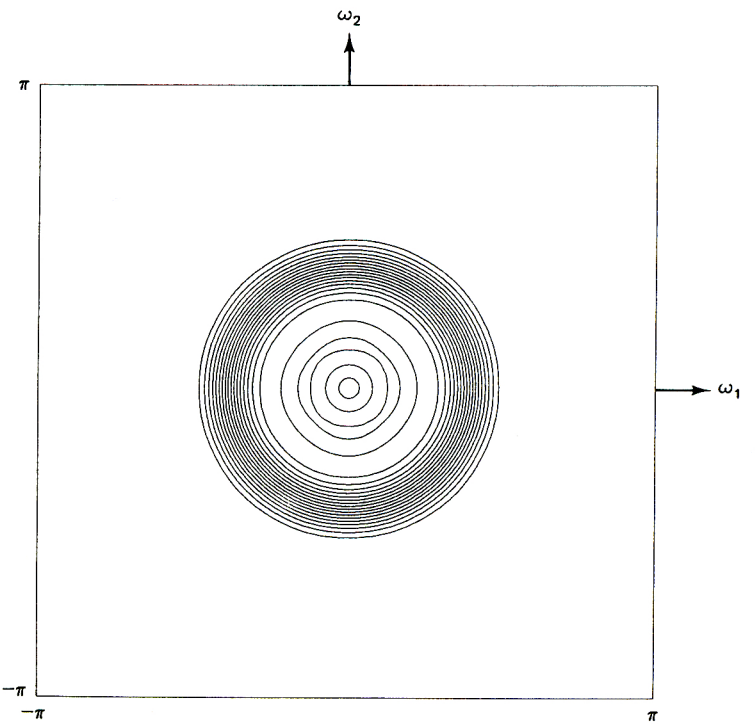

(b)

Figure 4.8 (continued)

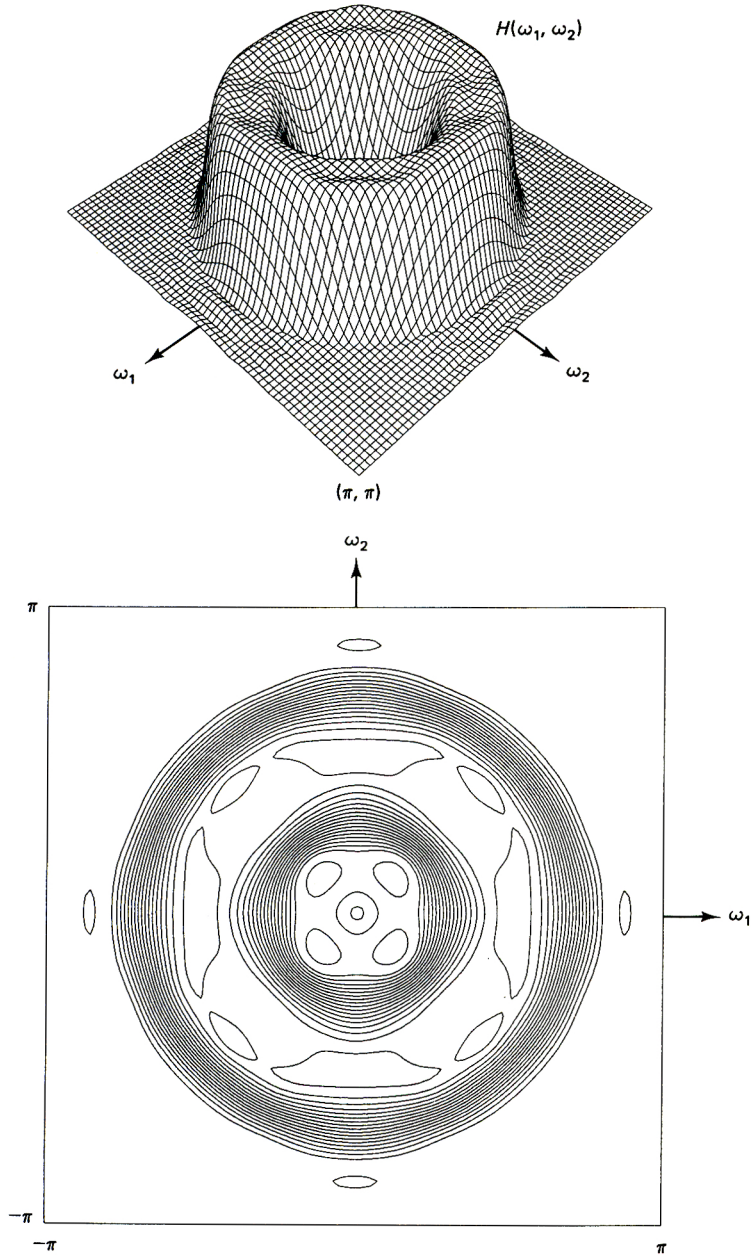

Figure 4.9 Frequency responses of bandpass filters designed by the window method. The desired impulse response was obtained by using (4.10c) with $R_1 = 0.3\pi$ and $R_2 = 0.7\pi$. The 1-D Kaiser window was used. The support regions of the windows are those shown in Figure 4.6. Both perspective and contour plots are shown. (a) Separable window design; (b) rotated circularly symmetric window design.

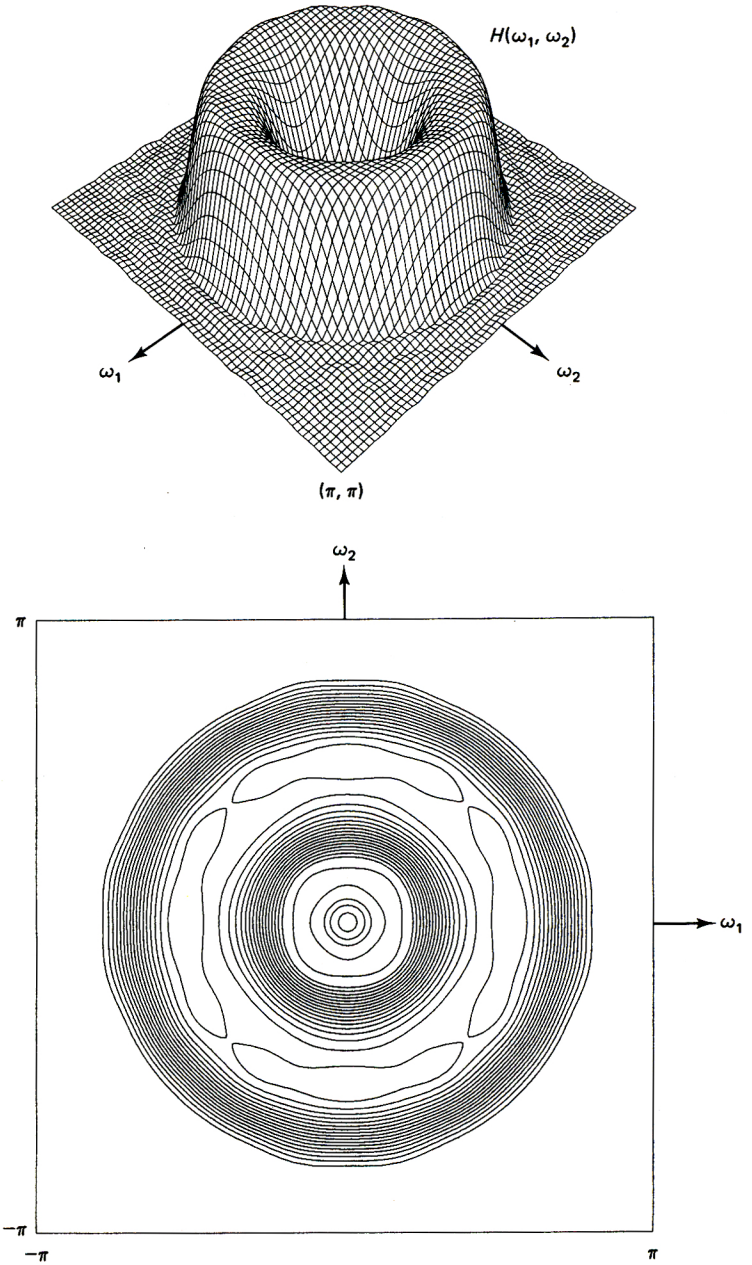

(b)

Figure 4.9 (continued)

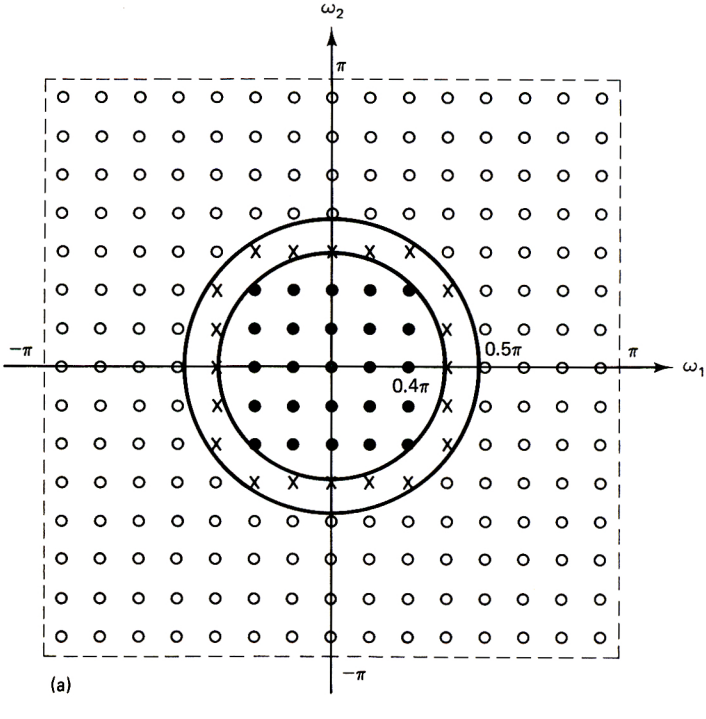

Figure 4.10 Example of a 15 × 15-point lowpass filter designed by the frequency sampling method. (a) Passband (filled-in dots), transition band (marked by "x"), and stopband (open dots) samples used in the design; (b) perspective plot of the filter frequency response; (c) contour plot of the filter frequency response.

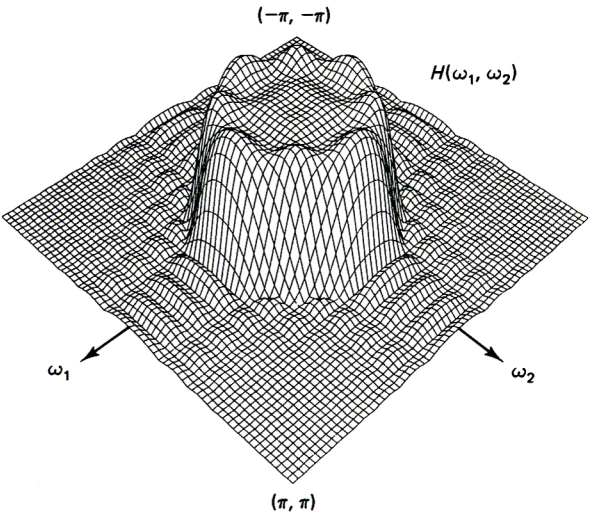

(b)

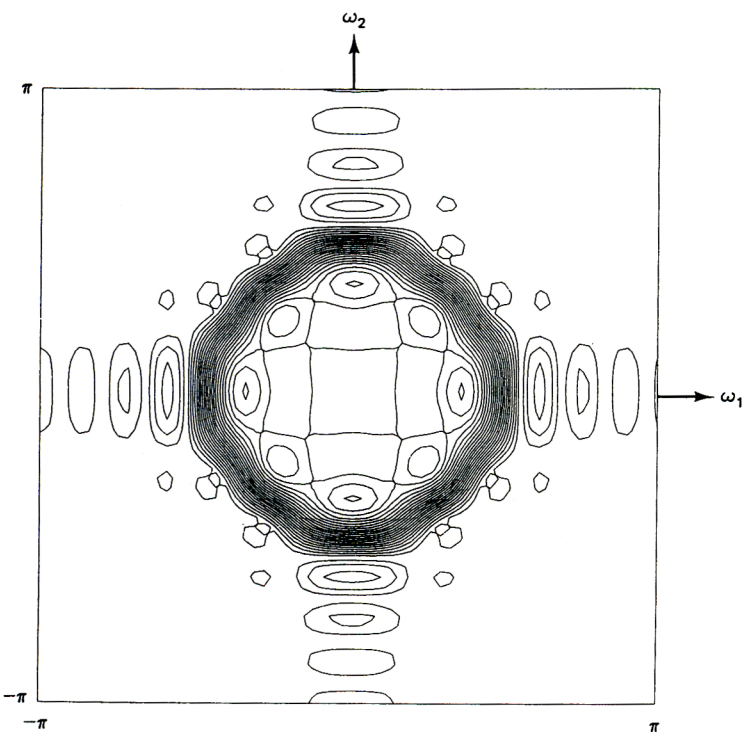

(c)

Figure 4.10 (continued)

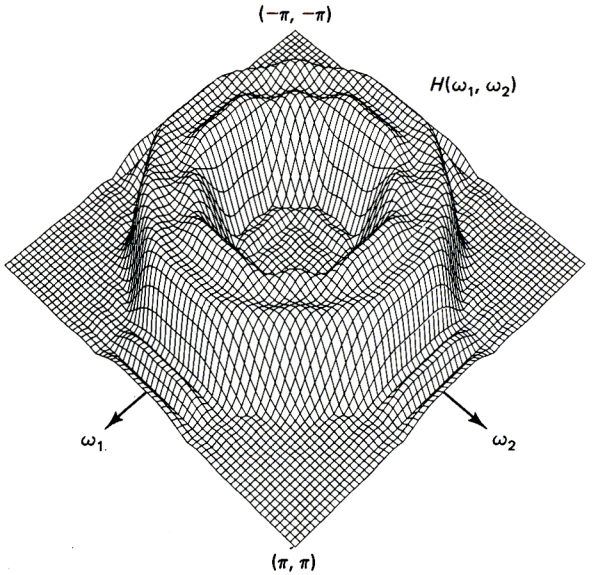

(a)

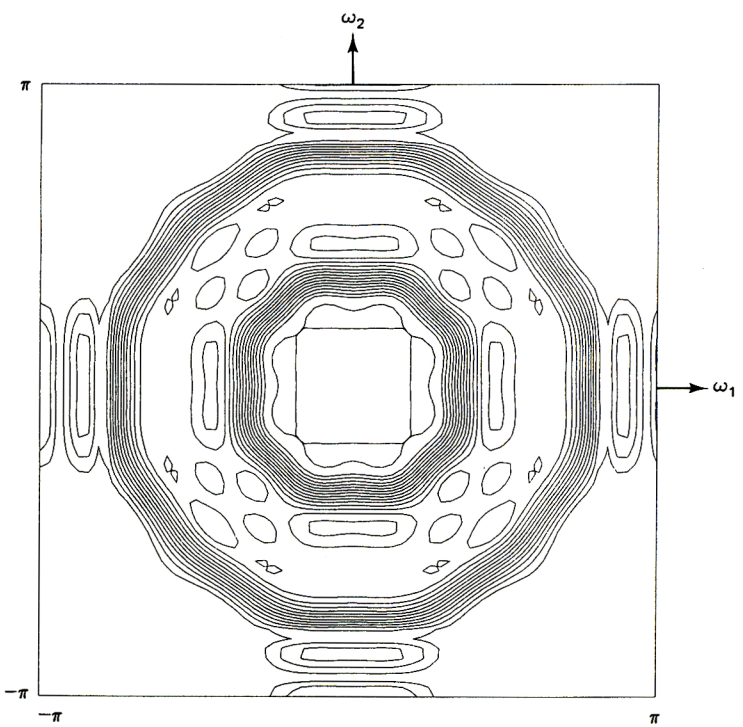

(b)

Figure 4.11 Example of a 15 × 15-point bandpass filter designed by the frequency sampling method. Transition regions used in the design are from 0.3π to 0.4π and from 0.7π to 0.8π. (a) Perspective plot of the filter frequency response; (b) contour plot of the filter frequency response.