MIRA900

Modelocked Ti:Sapphire Lasers

		Mira Optima 900-F	Mira Optima 900-P	Mira Optima 900-D	Mira 900-S
System Specifications[1]	Output Power[2]				
	(Verdi® V-5 pump)	0.65W	0.65W	0.65W	0.65W
	(Verdi V-8)	1.0W	1.0W	1.0W	1.0W
	(Verdi V-10)	1.3W	1.3W	1.3W	1.3W
	(Innova® 310 8W)	0.8W	0.8W	0.8W	0.8W
	(Sabre® 14W)	1.4W	1.4W	1.4W	1.4W
	Tuning Range[3] (700 to 1000 nm typical)	700 to 980 nm	700 to 980 nm	700 to 980 nm	700 to 980 nm
	Autocorrelation[4]	<200 fs	<3 ps	<3 ps & <200 fs	<200 fs
	Repetition Rate	76 MHz	76 MHz	76 MHz	76 MHz
	Noise[5]	<0.1% (Verdi) <2% (Sabre/Innova)	<0.1% (Verdi) <2% (Sabre/Innova)	<0.1% (Verdi) <2% (Sabre/Innova)	<0.1% (Verdi) <2% (Sabre/Innova)
	Stability[6]	<3% (Verdi) <5% (Sabre/Innova)	<3% (Verdi) <5% (Sabre/Innova)	<3% (Verdi) <5% (Sabre/Innova)	<3% (Verdi) <5% (Sabre/Innova)
	Beam Diameter[7]	0.8 mm	0.8 mm	0.8 mm	0.8 mm
	Beam Divergence[8]	1.7 mrad	1.7 mrad	1.7 mrad	1.7 mrad
	Spatial Mode[9]	TEM_{00}	TEM_{00}	TEM_{00}	TEM_{00}
	Polarization	Horizontal	Horizontal	Horizontal	Horizontal
	Physical Dimensions	111.1 x 38.1 x 19.7 cm (43.75 x 15 x 7.75 in)			

[1] Specifications apply only with Coherent pump lasers. [2] At 800 nm [3] Further IR coverage possible with Long Wave optics set. [4] Multiply by 0.65 $sech^2$ de-convolution factor for pulse duration. [5] Measured rms in a 10 Hz to 20 MHz bandwidth. [6] Power drift in any two-hour period after warm-up when crystal's cooling water is maintained at ±0.1°C. [7] $1/e^2$ diameter (±0.2 mm) at exit port. [8] Full angle divergence (±0.3 mrad) at exit port. [9] Typical measured M^2 value, 1.1

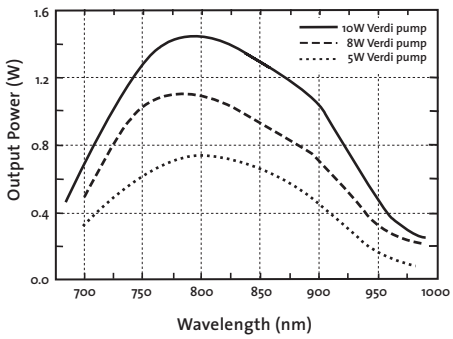

Typical X-Wave Power Tuning Curves for Verdi-pumped Mira Optima 900-P

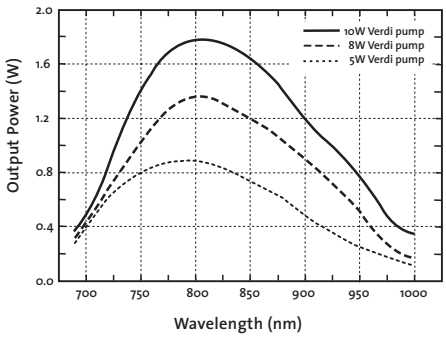

Typical X-Wave Power Tuning Curves for Verdi-pumped Mira Optima 900-F

COHERENT

MIRA900

Modelocked Ti:Sapphire Lasers

Mira Optima 900-P

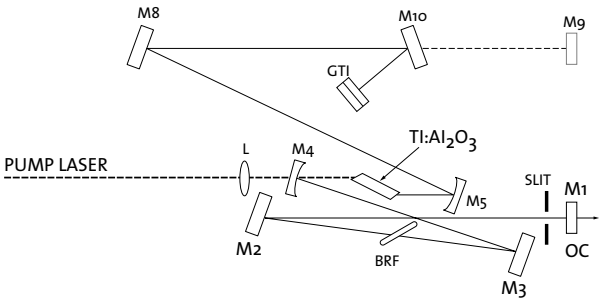

Mira Optima 900-F / Mira 900-S

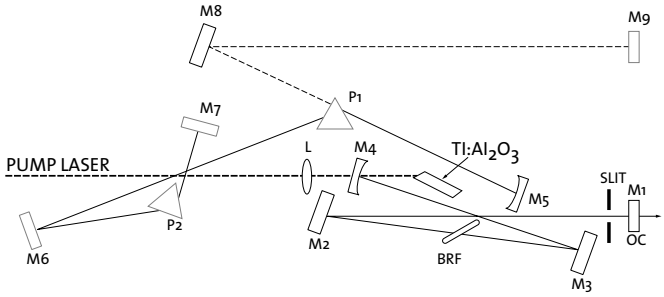

Mira Optima 900-D

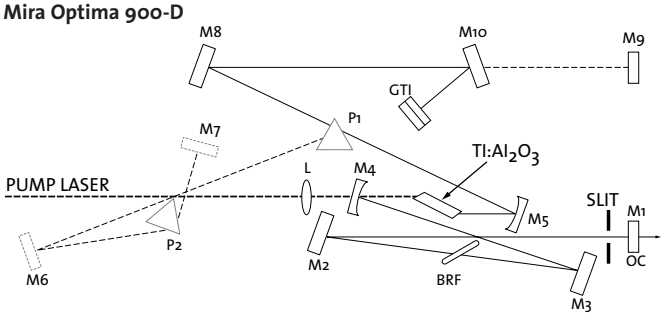

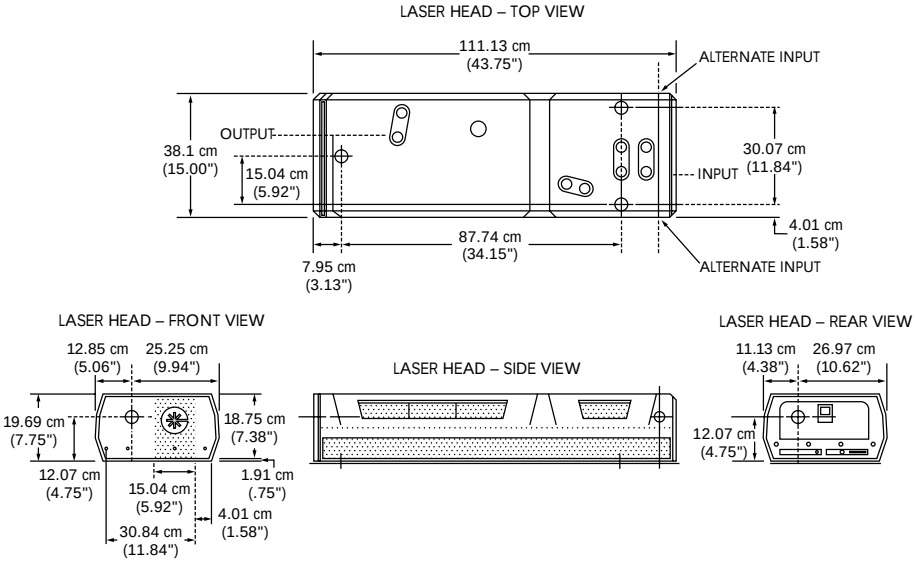

COHERENT®

LASER GROUP

5100 Patrick Henry Drive
Santa Clara, CA 95054
Phone: 1-800-527-3786
1-408-764-4983
Fax: 1-800-362-1170
1-408-988-6838
Email: tech_sales@cohr.com
Web: http://www.cohr.com

LOCAL OFFICES

Japan	+81 (3) 5635 8700
Benelux	+31 (30) 280 6060
France	+33 (1) 6985 5145
Germany	+49 (6071) 9680
Italy	+39 (02) 34 530 214
UK	+44 (1353) 658 800

Coherent follows a policy of continuous product improvement. Specifications are subject to change without notice.

Coherent's scientific and industrial lasers are certified to comply with the Federal Regulations (21 CFR Subchapter J) as administered by the Center for Devices and Radiological Health on all systems ordered for shipment after August 2, 1976.

Coherent offers a limited warranty for all Mira® systems. Please refer to the latest version of the Coherent, Inc., Laser Group Price List for full details of this warranty coverage.

ISO 9002 REGISTERED

CE 93/42/EEC 0459

Printed in the U.S.A. SC21-2000-5M0500

Copyright ©2000 Coherent,Inc.