EE C245 – ME C218
Introduction to MEMS Design
Fall 2007

Prof. Clark T.-C. Nguyen

Dept. of Electrical Engineering & Computer Sciences
University of California at Berkeley
Berkeley, CA 94720

Lecture 16: Energy Methods I

Lecture Outline

- Reading: Senturia, Chpt. 9, 10
- Lecture Topics:
  - Bending of beams
  - Cantilever beam under small deflections
  - Combining cantilevers in series and parallel
  - Folded suspensions
  - Design implications of residual stress and stress gradients
  - Energy Methods
    - Virtual Work
    - Energy Formulations
    - Tapered Beam Example
    - Doubly Clamped Beam Example
    - Large Deflection Analysis

Deflection of Folded Flexures

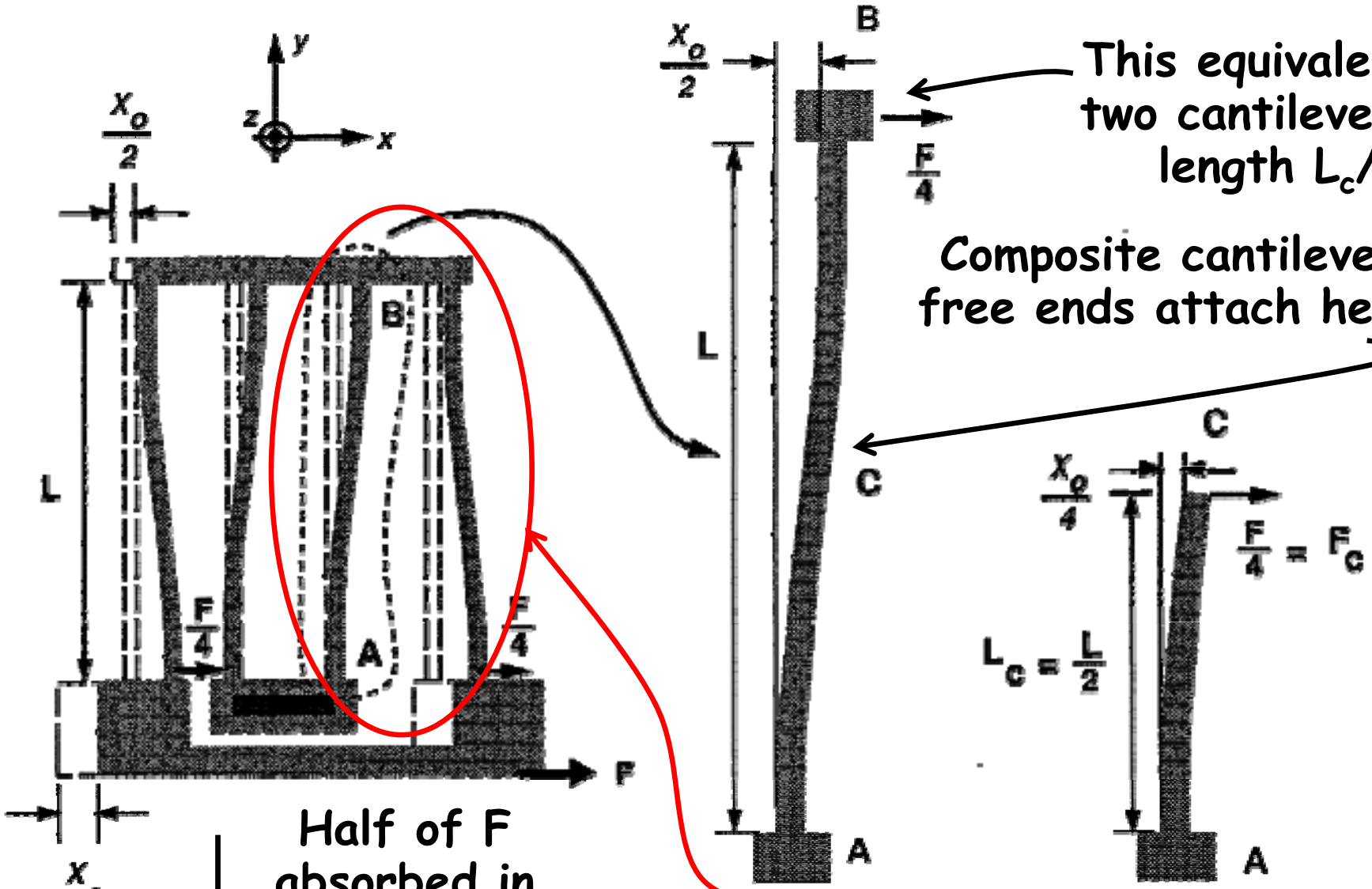

This equivalent to two cantilevers of length $L_c/2$

Composite cantilever free ends attach here

Half of F absorbed in other half (symmetrical)

4 sets of these pairs, each of which gets $\frac{1}{4}$ of the total force F

Constituent Cantilever Spring Constant

- From our previous analysis:

$$x(y) = \frac{F_c L_c}{2EI_z} y^2 \left(1 - \frac{y}{3L_c}\right) = \frac{F_c y^2}{6EI_z}(3L_c - y)$$

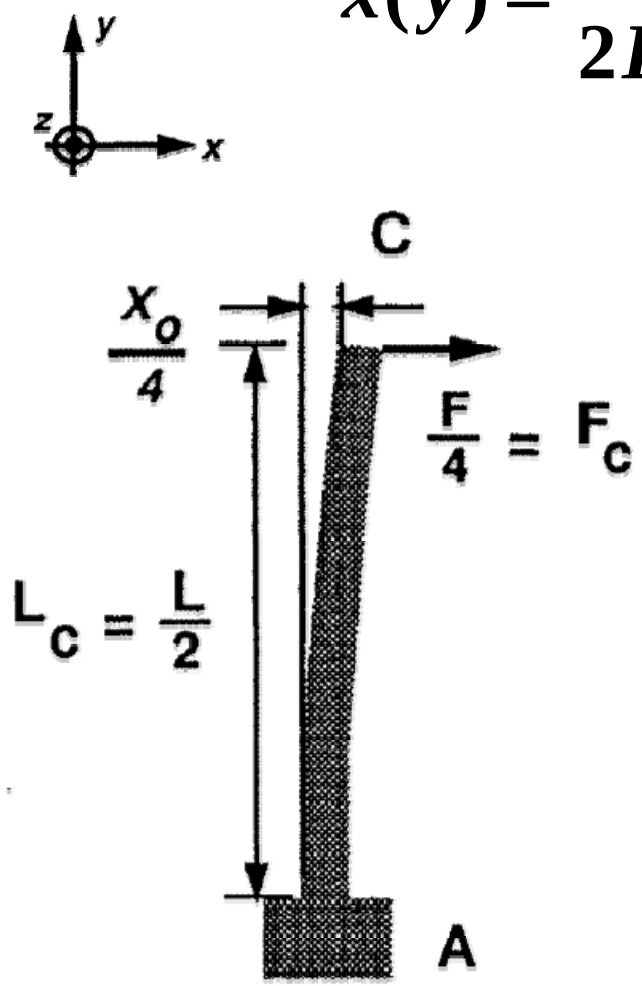

- From which the spring constant is:

$$k_c = \frac{F_c}{x(L_c)} = \frac{3EI_z}{L_c^3}$$

- Inserting $L_c = L/2$

$$\boxed{k_c = \frac{3EI_z}{(L/2)^3} = \frac{24EI_z}{L^3}}$$

Overall Spring Constant

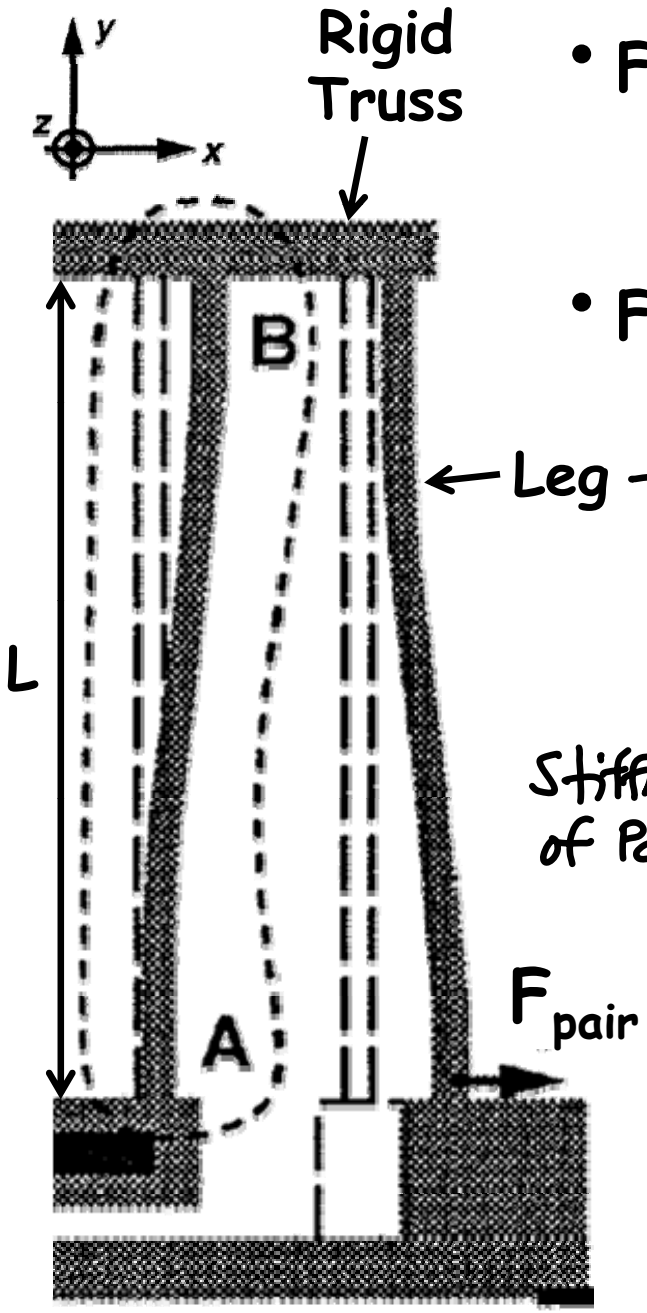

- Four pairs of clamped-guided beams
  - In each pair, beams bend in series
  - (Assume trusses are inflexible)
- Force is shared by each pair → $F_{pair} = F/4$

total force on shuttle

← Leg → Displacement of two legs add

↳ thus, springs are in series:

$$x = \frac{F_{pair}}{k_{pair}} = \frac{F_{pair}}{(k_{leg} \| k_{leg})} = \left(\frac{F}{4}\right)\left(\frac{1}{k_{leg}} + \frac{1}{k_{leg}}\right)$$

Stiffness of Pair

From before: $k_{leg} = k_c \| k_c = \frac{k_c}{2}$

Thus:

$$x = \left(\frac{F}{4}\right)\left(\frac{2}{k_c} + \frac{2}{k_c}\right) = \frac{F}{k_c} = \frac{F}{k_{tot}}$$

$$\Rightarrow \boxed{k_{tot} = k_c = \frac{24 E I_z}{L^3}}$$

Folded-Beam Stiffness Ratios

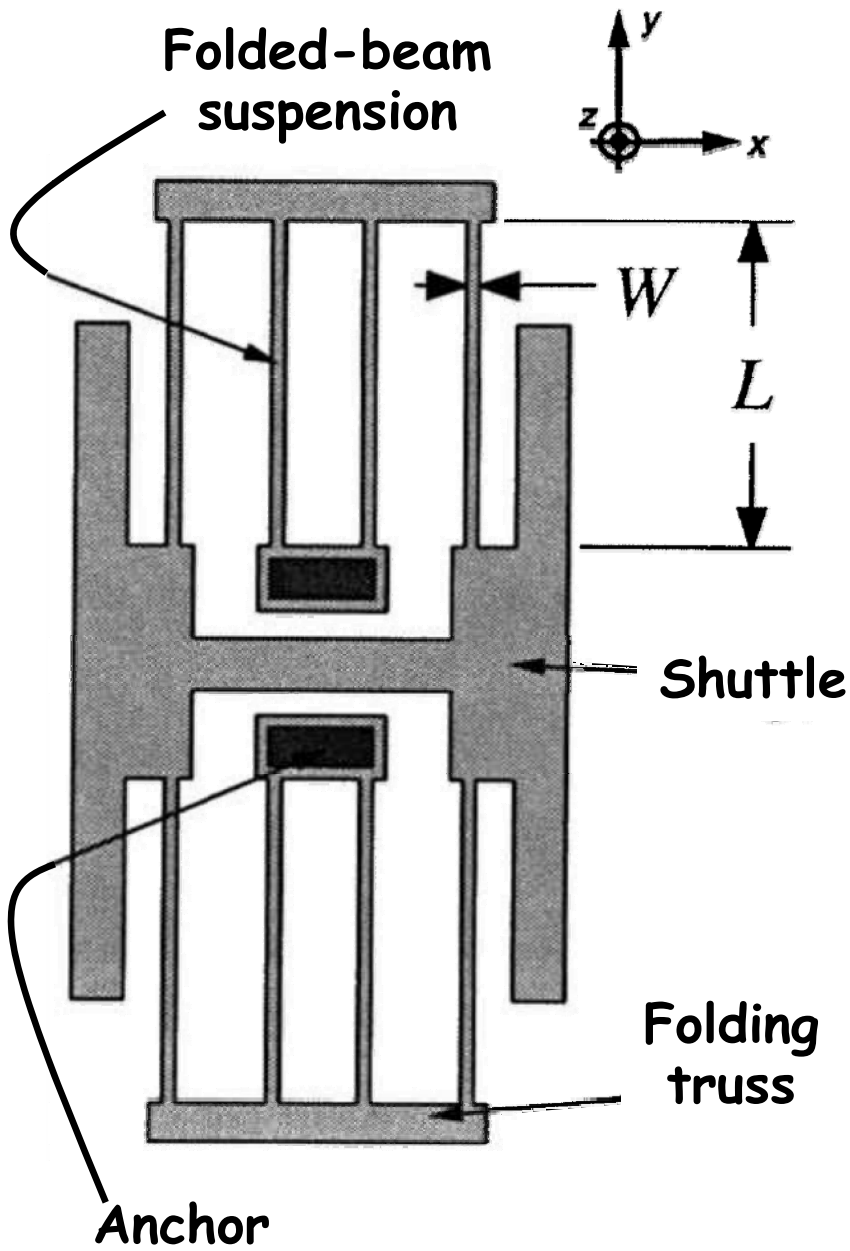

- In the x-direction:

$$k_x = \frac{24EI_z}{L^3}$$

- In the z-direction:
  - Same flexure and boundary conditions

$$k_z = \frac{24EI_x}{L^3}$$

- In the y-direction:

[See Senturia, §9.2] $$k_y = \frac{8EWh}{L}$$

- Thus: $$\boxed{\frac{k_y}{k_x} = 4\left(\frac{L}{W}\right)^2}$$

Much stiffer in y-direction!

Folded-Beam Suspensions Permeate MEMS

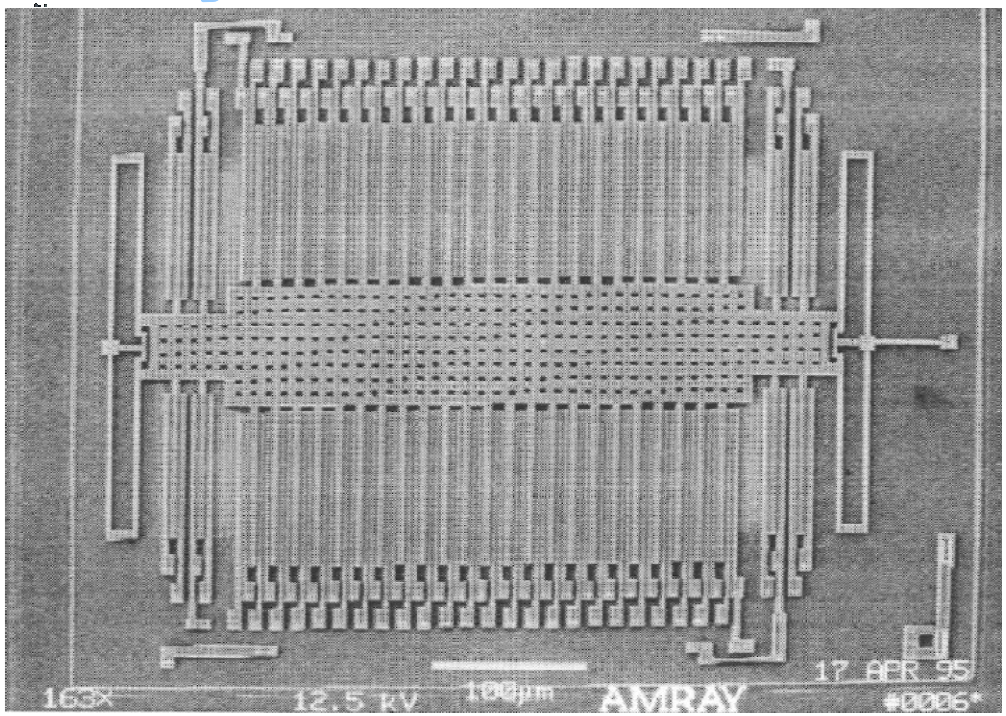

Accelerometer [ADXL-05, Analog Devices]

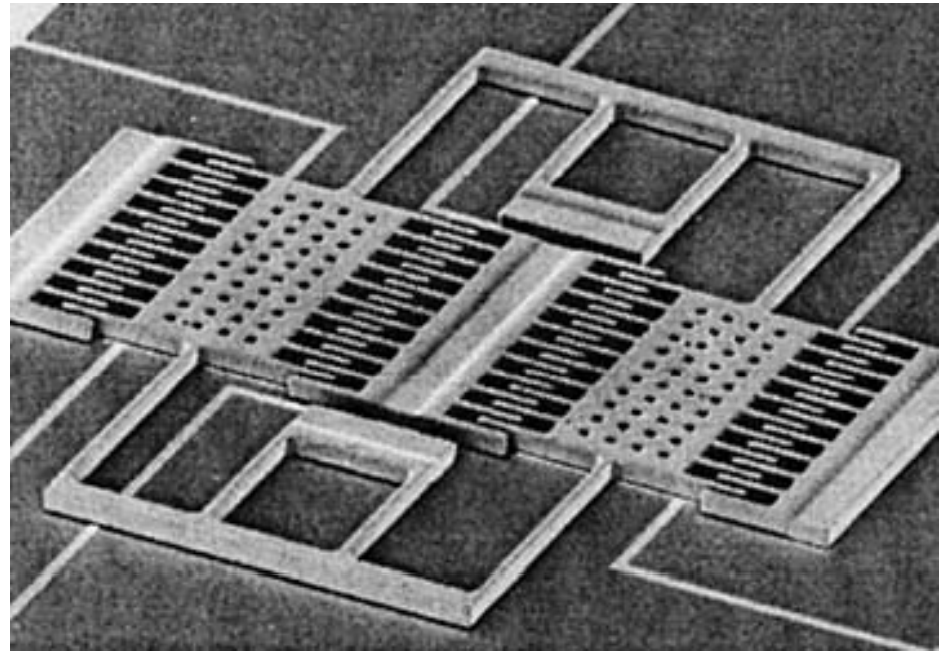

Gyroscope [Draper Labs.]

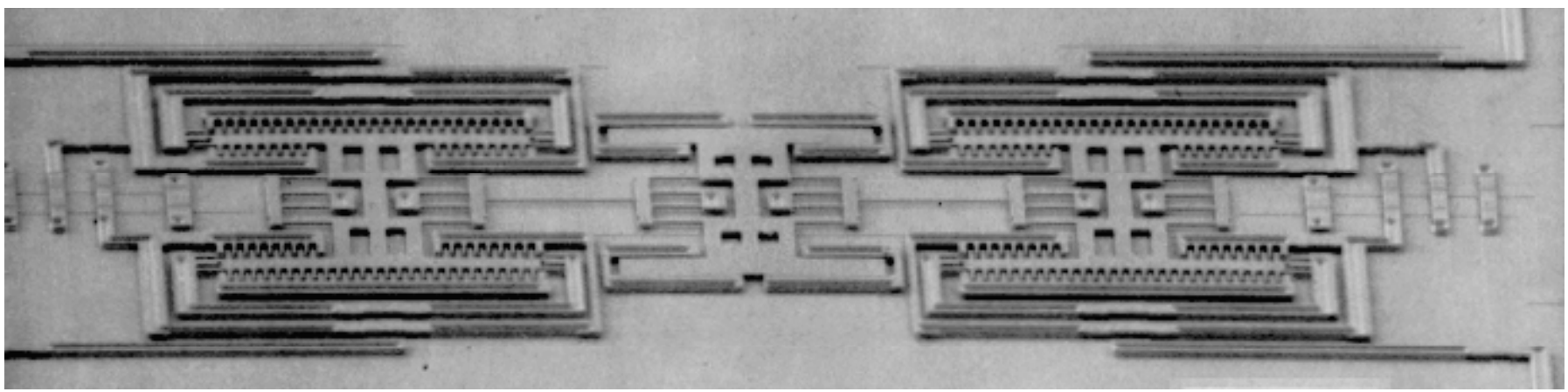

Micromechanical Filter [K. Wang, Univ. of Michigan]

Folded-Beam Suspensions Permeate MEMS

- **Below**: Micro-Oven Controlled Folded-Beam Resonator

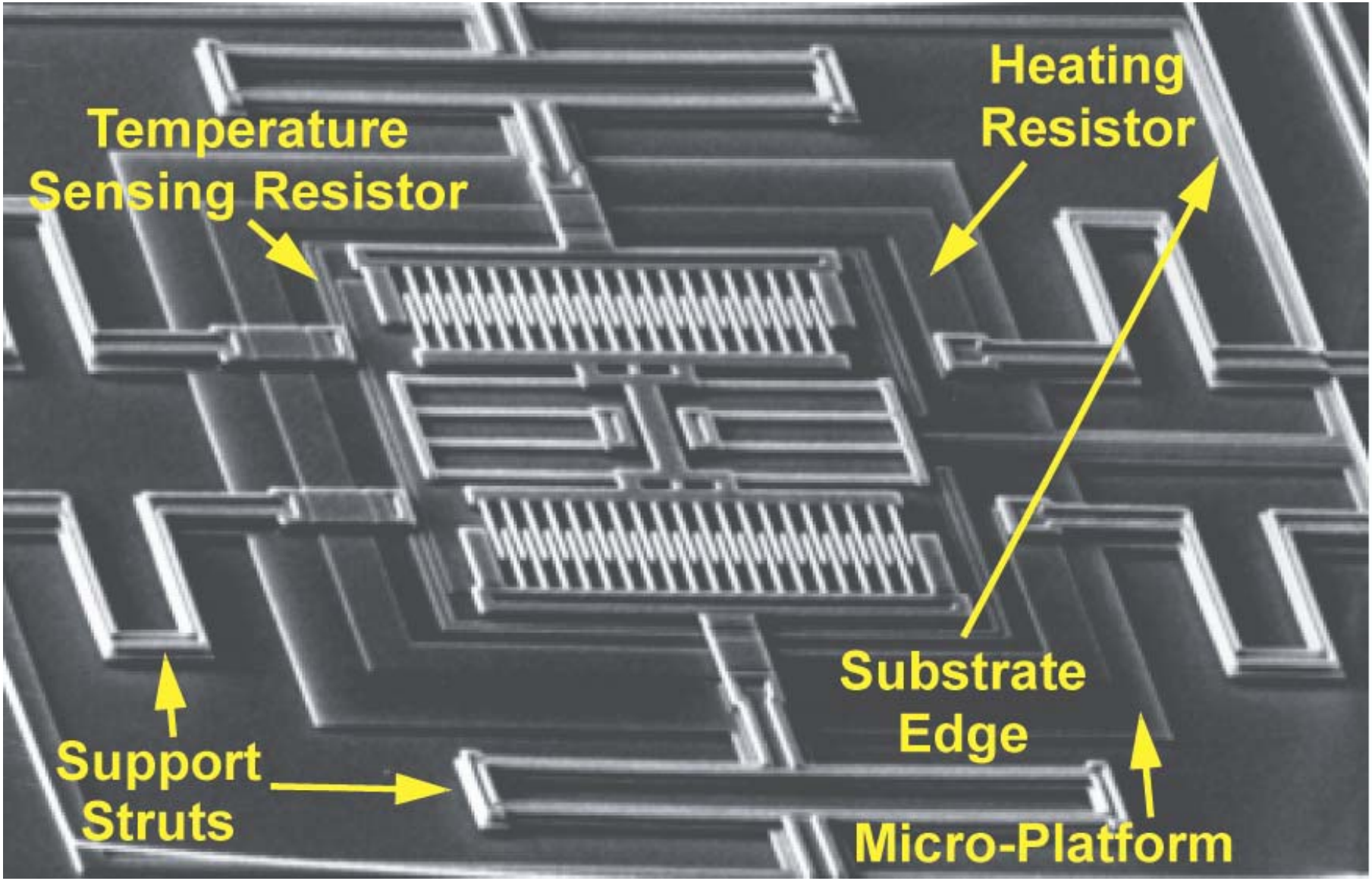

Stressed Folded-Flexures

Clamped-Guided Beam Under Axial Load

- Important case for MEMS suspensions, since the thin films comprising them are often under residual stress
- Consider small deflection case: y(x) « L

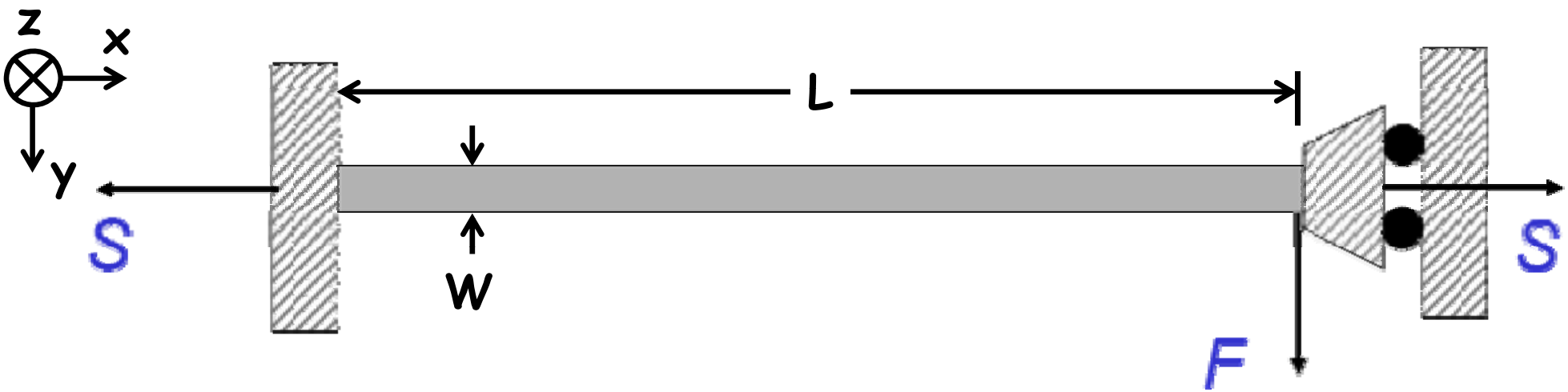

Governing differential equation: (Euler Beam Equation)

$$EI_z \frac{d^4 y}{dx^4} - S\frac{d^2 y}{dx^2} = \underbrace{F\delta(x-L)}_{\text{Unit impulse @ } x=L}$$

Axial Load

The Euler Beam Equation

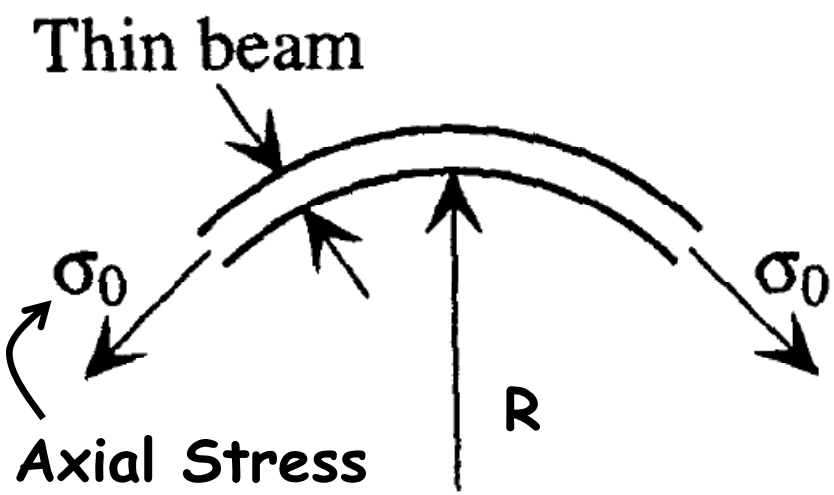

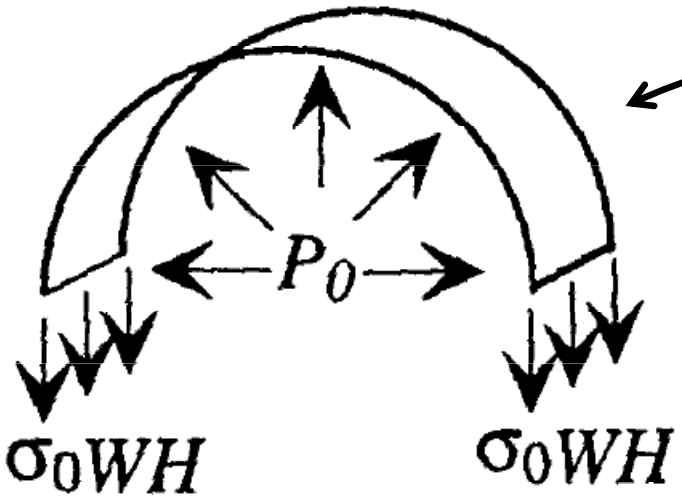

- Axial stresses produce no net horizontal force; but as soon as the beam is bent, there is a net downward force
  - For equilibrium, must postulate some kind of upward load on the beam to counteract the axial stress-derived force
  - For ease of analysis, assume the beam is bent to angle π

The Euler Beam Equation

Note: Use of the full bend angle of π to establish conditions for load balance; but this returns us to case of small displacements and small angles

Clamped-Guided Beam Under Axial Load

- Important case for MEMS suspensions, since the thin films comprising them are often under residual stress
- Consider small deflection case: y(x) « L

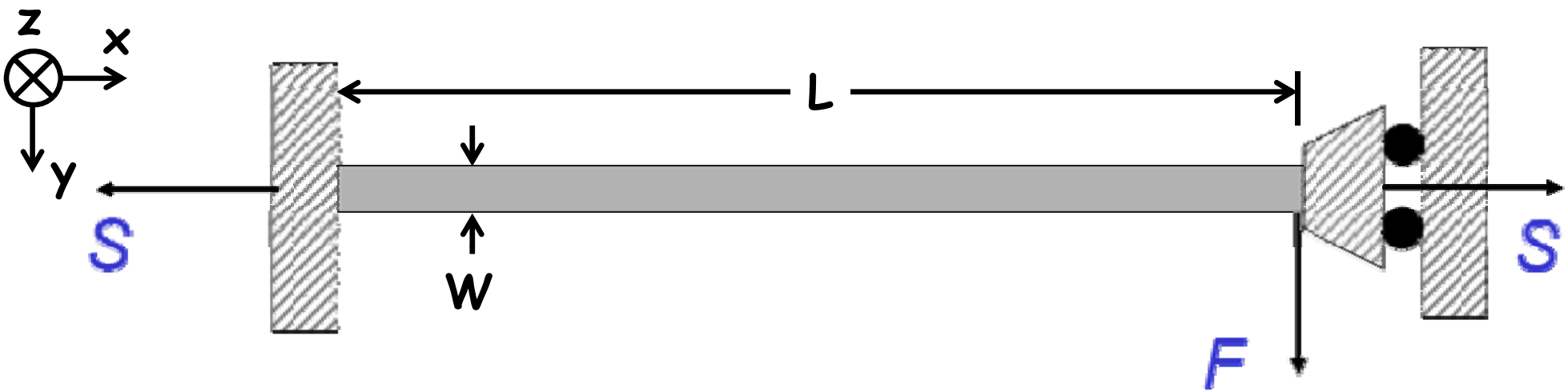

Governing differential equation: (Euler Beam Equation)

$$EI_z \frac{d^4 y}{dx^4} - S\frac{d^2 y}{dx^2} = \underbrace{F\delta(x-L)}_{\text{Unit impulse @ } x=L}$$

Axial Load

Solving the ODE

- Can solve the ODE using standard methods
  - Senturia, pp. 232-235: solves ODE for case of point load on a clamped-clamped beam (which defines B.C.'s)
  - For solution to the clamped-guided case: see S. Timoshenko, Strength of Materials II: Advanced Theory and Problems, McGraw-Hill, New York, 3rd Ed., 1955
- Result from Timoshenko:

$S > 0$ (tension)

$$k^{-1} = \frac{pL - 2\tanh(pL/2)}{p|S|} = \frac{y(x=L)}{F}$$

$S < 0$ (compression)

$$k^{-1} = \frac{-pL + 2\tan(pL/2)}{p|S|} = \frac{y(x=L)}{F}$$

where $p = \sqrt{\frac{|S|}{EI_z}}$

Design Implications

- Straight flexures
  - Large tensile S means flexure behaves like a tensioned wire (for which $k^{-1} = L/S$)
  - Large compressive S can lead to buckling ($k^{-1} \rightarrow \infty$)
- Folded flexures
  - Residual stress only partially released
  - Length from truss to shuttle's centerline differs by L_s for inner and outer legs

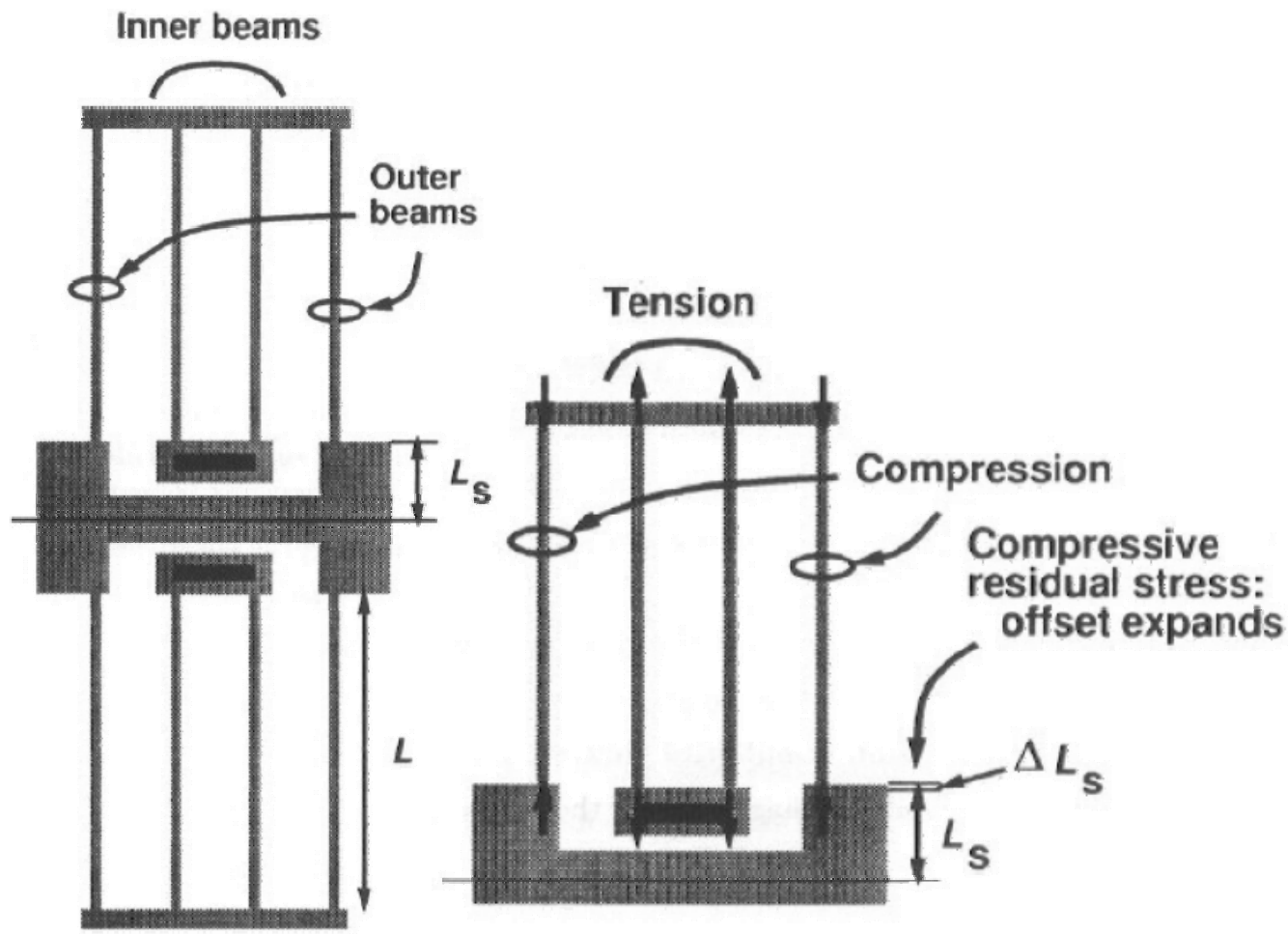

Effect on Spring Constant

- Residual compression on outer legs with same magnitude of tension on inner legs:

Beam Strain: $\varepsilon_b = \pm\varepsilon_r\left(\frac{L_s}{L}\right)$; Stress Force: $S = \pm E\varepsilon_r\left(\frac{L_s}{L}\right)Wh$

- Spring constant becomes:

$$k = 4(k_{com}^{-1} + k_{ten}^{-1})^{-1}$$

$$k = 4\left[\frac{-pL + 2\tan(pL/2)}{p|S|} + \frac{pL - 2\tanh(pL/2)}{p|S|}\right]^{-1}$$

- <u>Remedies</u>:
  - Reduce the shoulder width L_s to minimize stress in legs
  - Compliance in the truss lowers the axial compression and tension and reduces its effect on the spring constant

Energy Methods

More General Geometries

- Euler-Bernoulli beam theory works well for simple geometries
- But how can we handle more complicated ones?
- <u>Example</u>: tapered cantilever beam
- <u>Objective</u>: Find an expression for displacement as a function of location x under a point load F applied at the tip of the free end of a cantilever with tapered width W(x)

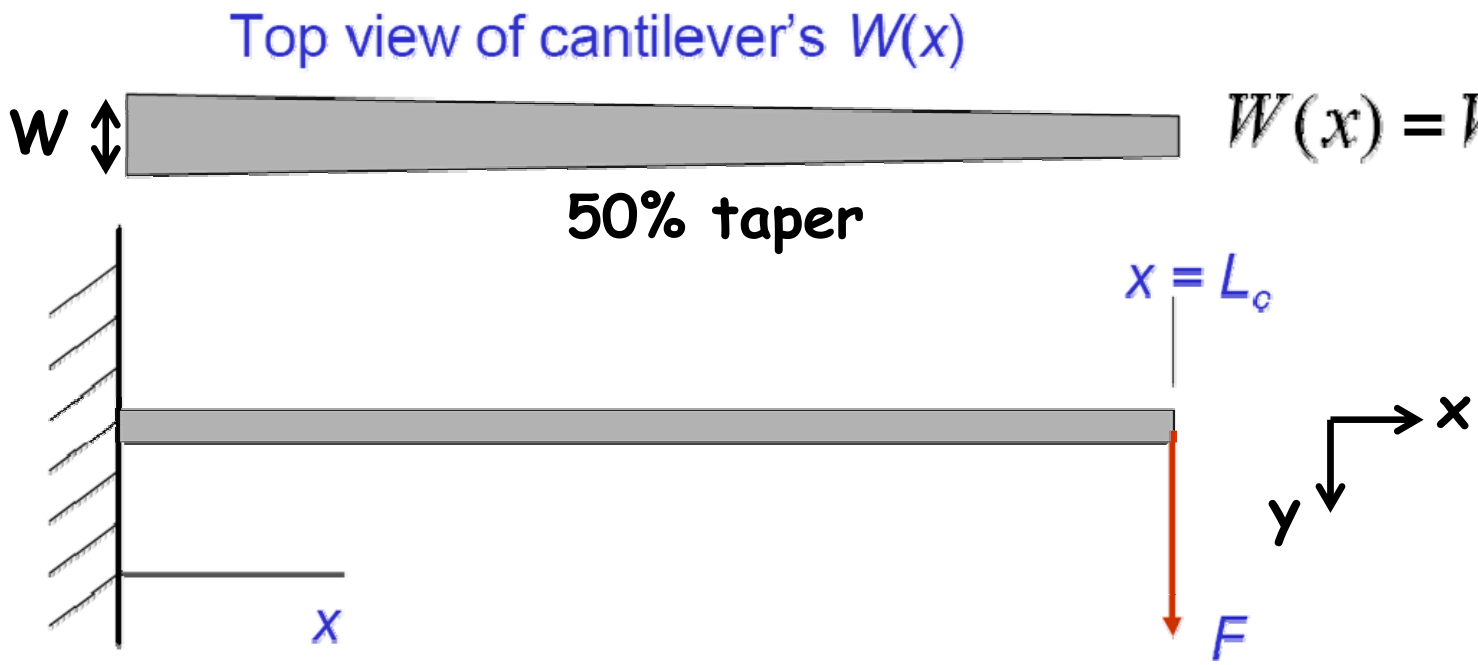

$$W(x) = W\left(1 - \frac{x}{2L_c}\right)$$

Solution: Use Principle of Virtual Work

- In an energy-conserving system (i.e., elastic materials), the energy stored in a body due to the quasi-static (i.e., slow) action of surface and body forces is equal to the work done by these forces …
- Implication: if we can formulate stored energy as a function of the deformation of a mechanical object, then we can determine how an object responds to a force by determining the shape the object must take in order to minimize the difference U between the stored energy and the work done by the forces:

$$U = \text{Stored Energy} - \text{Work Done}$$

- Key idea: we don't have to reach U = 0 to produce a very useful, approximate *analytical* result for load-deflection

More Visual Description …

Fundamentals: Energy Density

- Strain energy density: [J/m^3]
  - To find work done in straining material

$$w = \int_0^{\varepsilon_x} \sigma_x d\varepsilon_x \quad \text{x-axis normal stress term}$$

$$[\sigma_x = E\varepsilon_x] \Rightarrow \quad w = \int_0^{\varepsilon_x} E\varepsilon_x d\varepsilon_x = \frac{1}{2} E\varepsilon_x^{\ 2}$$

- Total strain energy [J]:
  - Integrate over all strains (normal and shear)

$$W = \iiint \left(\frac{1}{2} E\left(\varepsilon_x^{\ 2} + \varepsilon_y^{\ 2} + \varepsilon_z^{\ 2}\right) + \frac{1}{2} G\left(\gamma_{xy}^{\ 2} + \gamma_{xz}^{\ 2} + \gamma_{yz}^{\ 2}\right) \right) dV$$

Bending Energy Density

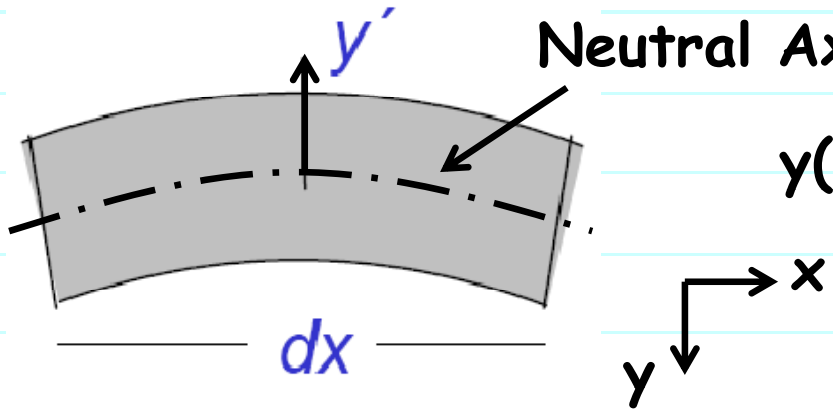

y(x) = transverse displacement of neutral axis

- First, find the bending energy dW_{bend} in an infinitesimal length dx:

Energy Due to Axial Load

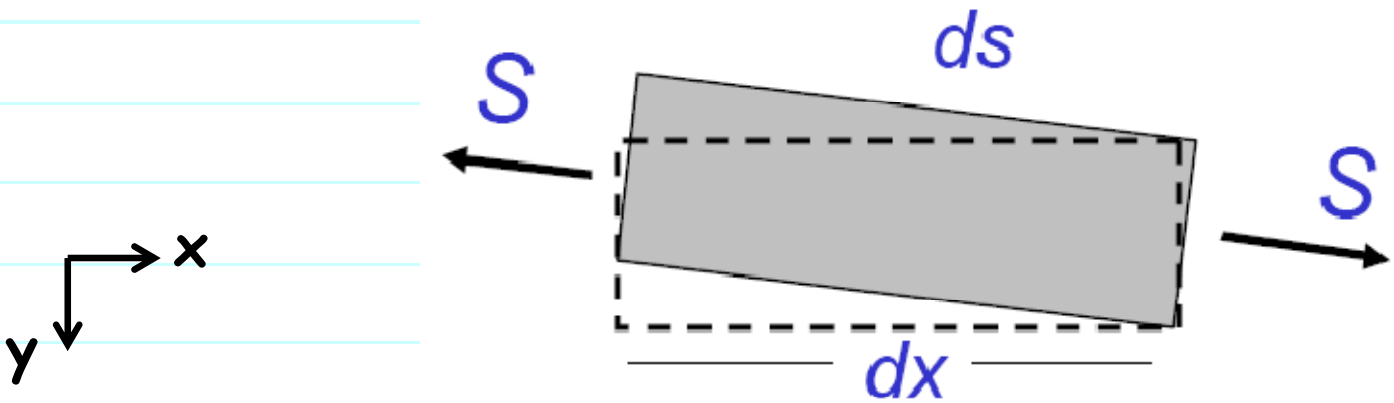

- Strain due to axial load S contributes an energy $dW_{stretch}$ in length dx, since lengthening of the different element dx (to ds) results in a strain ε_x

Shear Strain Energy

$$W_{shear} = \frac{3(EI_z)^2}{4GWh}\int_0^L \left(\frac{d^3y}{dx^3}\right)^2 dx$$

Shear Modulus

- See W.C. Albert, "Vibrating Quartz Crystal Beam Accelerometer," Proc. ISA Int. Instrumentation Symp., May 1982, pp. 33-44

Applying the Principle of Virtual Work

- Basic Procedure:
  - Guess the form of the beam deflection under the applied loads
  - Vary the parameters in the beam deflection function in order to minimize:

$$U = \underbrace{\sum_j W_j}_{\text{Sum strain energies}} - \sum_i F_i u_i$$

Assumes point load

Displacement at point load

  - Find minima by simply setting derivatives to zero

- See Senturia, pg. 244, for a general expression with distrubuted surface loads and body forces

Example: Tapered Cantilever Beam

- Objective: Find an expression for displacement as a function of location x under a point load F applied at the tip of the free end of a cantilever with tapered width W(x)

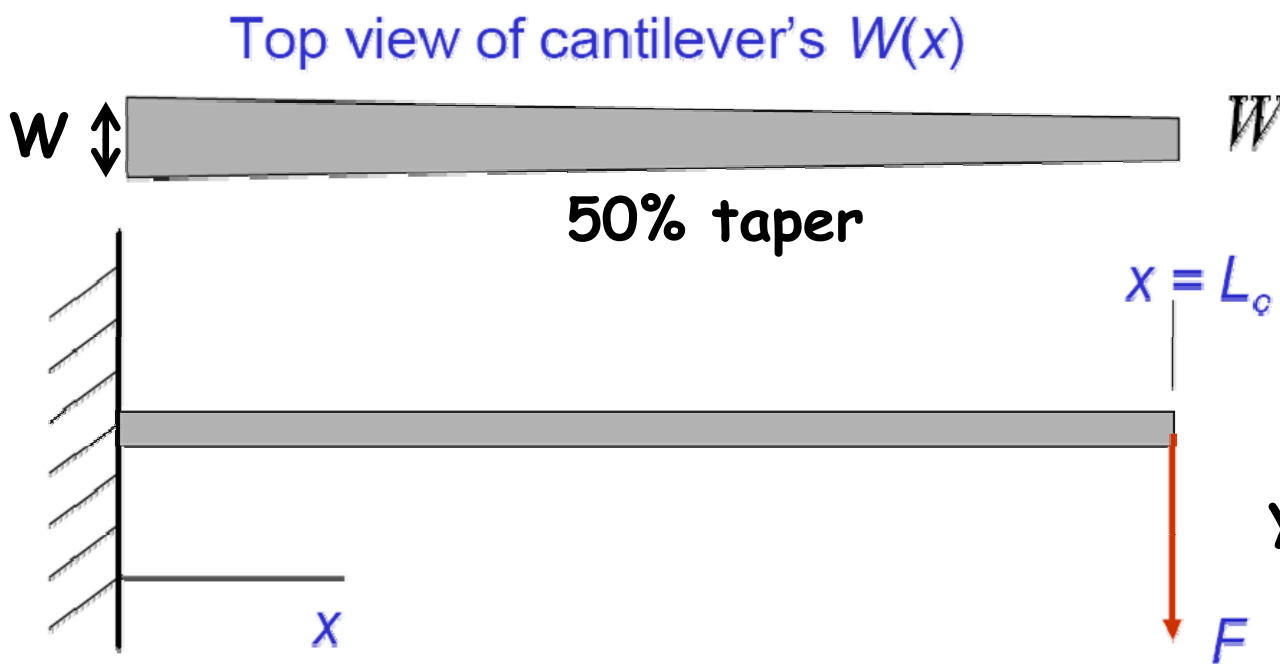

$$W(x) = W\left(1 - \frac{x}{2L_c}\right)$$

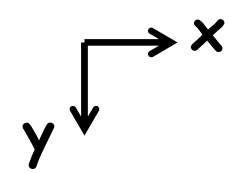

Adjustable parameters: minimize U

- Start by guessing the solution → $y(x) = c_2 x^2 + c_3 x^3$
  - It should satisfy the boundary conditions
  - The strain energy integrals shouldn't be too tedious
    - This might not matter much these days, though, since one could just use matlab or mathematica

Strain Energy And Work By F

$$U = W_{bend} - F \cdot y(L_c)$$

$$W_{bend} = \frac{1}{2} E \int_0^{L_c} I_z(x) \left(\frac{d^2 y}{dx^2} \right)^2 dx$$

(Bending Energy)

$$I_z(x) = \frac{W(x) h^3}{12}$$

$$\frac{d^2 y}{dx^2} = 2c_2 + 6c_3 x$$

(Using our guess)

$$W(x) = W\left(1 - \frac{x}{2L_c}\right)$$

Tip Deflection

$$= \frac{1}{24} EWh^3 \int_0^{L_c} \left(1 - \frac{x}{2L_c}\right)(2c_2 + 6c_3 x)^2 dx - F(c_2 L_c^{\ 2} + c_3 L_c^{\ 3})$$

Find c_2 and c_3 That Minimize U

- Minimize U → basically, find the c_2 and c_3 that brings U closest to zero (which is what it would be if we had guessed correctly)
- The c_2 and c_3 that minimize U are the ones for which the partial derivatives of U with respective to them are zero:

$$\frac{\partial U}{\partial c_2} = 0 \qquad \frac{\partial U}{\partial c_3} = 0$$

- Proceed:
  - First, evaluate the integral to get an expression for U:

$$U = EWh^3\left\{\frac{5c_3^{\,2}}{16}L_e^{\,3} + \frac{c_2c_3}{3}L_e^{\,2} + \frac{c_2^{\,2}}{8}L_e\right\} - F\left(c_2L_e^{\,2} + c_3L_e^{\,3}\right)$$

Minimize U (cont)

- Evaluate the derivatives and set to zero:

$$\frac{\partial U}{\partial c_2} = 0 = \left(\frac{EWh^3}{3} c_3 - F \right) L_e^{\,2} + \left(\frac{EWh^3}{4} c_2 \right) L_e$$

$$\frac{\partial U}{\partial c_3} = 0 = \left(\frac{5}{8} EWh^3 c_3 - F \right) L_e^{\,3} + \left(\frac{EWh^3}{3} c_2 \right) L_e^{\,2}$$

- Solve the simultaneous equations to get c_2 and c_3:

$$\boxed{c_2 = \left(\frac{84}{13} \right) \frac{FL_e}{EWh^3} \qquad c_3 = -\left(\frac{24}{13} \right) \frac{F}{EWh^3}}$$

The Virtual Work-Derived Solution

- And the solution:

$$y(x) = \left(\frac{24F}{13EWh^3}\right)\left(\left(\frac{7}{2}\right)L_c - x\right)x^2$$

- Solve for tip deflection and obtain the spring constant:

$$y(L_c) = \left(\frac{24F}{13EWh^3}\right)\left(\frac{5}{2}\right)L_c^{\ 3} \qquad k_c = F / y(L_c) = \left(\frac{13EWh^3}{60L_c^{\ 3}}\right)$$

- Compare with previous solution for constant-width cantilever beam (using Euler theory):

$$y(L_c) = \left(\frac{4F}{EWh^3}\right)L_c^{\ 3} \longrightarrow$$ 13% smaller than tapered-width case

Comparison With Finite Element Simulation

- Below: ANSYS finite element model with

  $L = 500\ \mu m$ $W_{base} = 20\ \mu m$ $E = 170\ GPa$
  $h = 2\ \mu m$ $W_{tip} = 10\ \mu m$

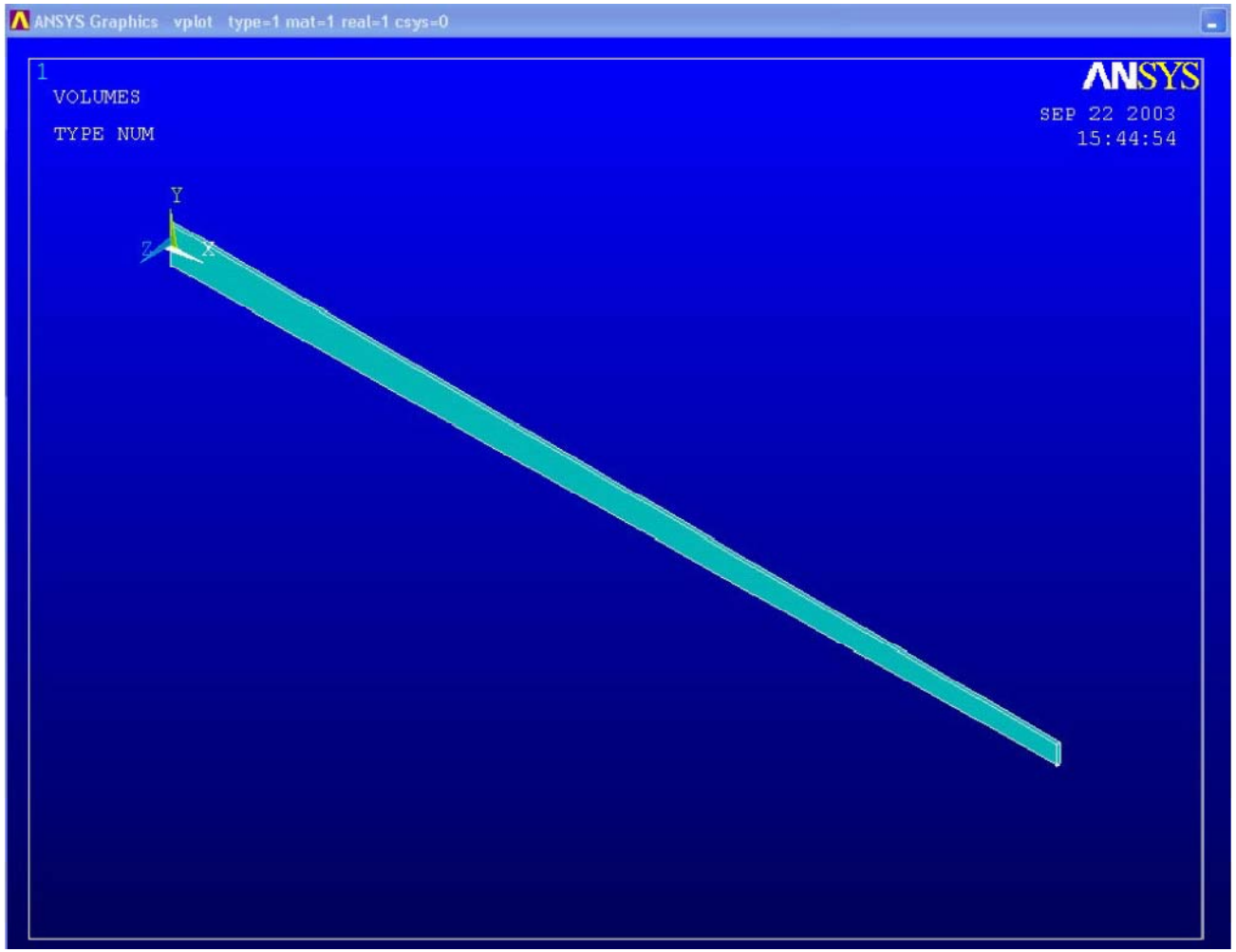

- Result: (from static analysis)
  ↳ $k = 0.471\ \mu N/m$
- This matches the result from energy minimization to 3 significant figures

Need a Better Approximation?

- Add more terms to the polynomial
- Add other strain energy terms:
  - Shear: more significant as the beam gets shorter
  - Axial: more significant as deflections become larger
- Both of the above remedies make the math more complex, so encourage the use of math software, such as Mathematica, Matlab, or Maple
- Finite element analysis is really just energy minimization
- If this is the case, then why ever use energy minimization analytically (i.e., by hand)?
  - Analytical expressions, even approximate ones, give insight into parameter dependencies that FEA cannot
  - Can compare the importance of different terms
  - Should use in tandem with FEA for design