EE247
Lecture 8

- Continuous-time filters
  - Bandpass filters
    - Example: Gm-C BP filter using simple diff. pair
      - Linearity & noise issues
  - Various Gm-C Filter implementations
  - Comparison of continuous-time filter topologies
- Switched-capacitor filters

Bandpass Filters

- Bandpass Filters:
  - $Q < 5$ → Combination of lowpass & highpass

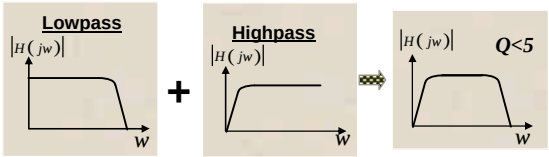

  - $Q > 5$ → Direct implementation

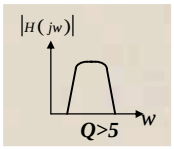

Lowpass to Bandpass Transformation Table

Lowpass filter structures & tables used to derive bandpass filters

$$Q = Q_{filter}$$

From:
Zverev,
Handbook of filter synthesis,
Wiley, 1967- p.157.

LP	BP	BP Values
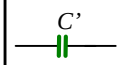	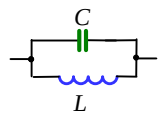	$C = QC' \times \frac{1}{R_r w_r}$ $L = \frac{1}{QC'} \times \frac{R_r}{w_r}$
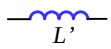	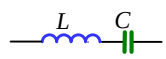	$L = QL' \times \frac{R_r}{w_r}$ $C = \frac{1}{QC'} \times \frac{1}{R_r w_r}$

C' & L' are normilzed LP values

Lowpass to Bandpass Transformation

$$C_1 = QC_1' \times \frac{1}{Rw_0}$$

$$L_1 = \frac{1}{QC_1'} \times \frac{R}{w_0}$$

$$C_2 = \frac{1}{QL_2'} \times \frac{1}{Rw_0}$$

$$L_2 = QL_2' \times \frac{R}{w_0}$$

$$C_3 = QC_3' \times \frac{1}{Rw_0}$$

$$L_3 = \frac{1}{QC_3'} \times \frac{R}{w_0}$$

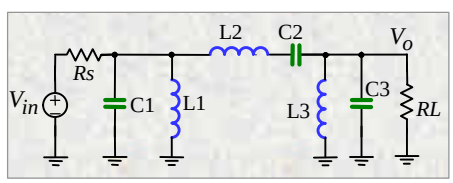

Where:

C_1', L_2', C_3', → normalized lowpass values

Q → bandpass filter quality factor &

w_0 → filter center frequency

Signal Flowgraph
6th Order Bandpass Filter

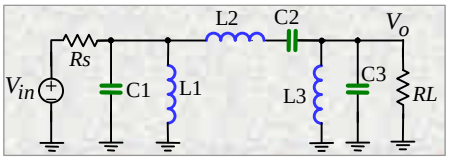

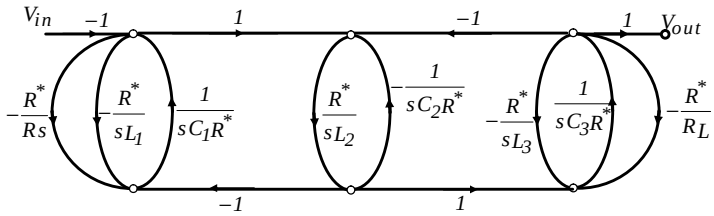

Note each C & L in the original lowpass prototype → replaced by a resonator
Substituting the bandpass L1, C1,….. by their normalized lowpass equivalent previous page
The resulting SFG is:

Signal Flowgraph
6th Order Bandpass Filter

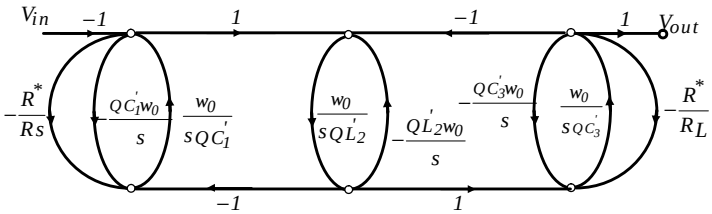

- Note the integrators have different time constants
  - Ratio of time constants for each resonator ~$1/Q^2$
    - → typically, requires high component ratios
    - → poor matching
- Desirable to convert SFG so that all integrators have equal time constants for optimum matching.
  - Scale nodes to obtain equal integrator time constant

Signal Flowgraph
6th Order Bandpass Filter

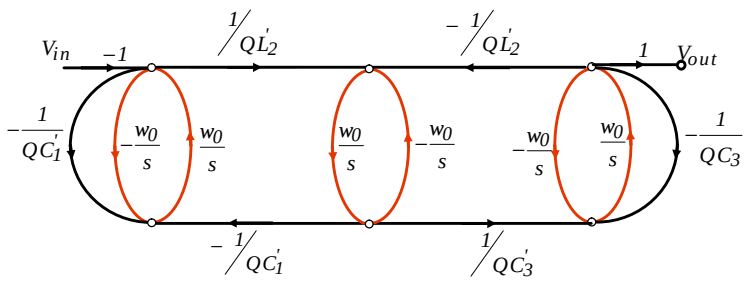

- Note: Three resonators
- All integrator time-constants are equal
- Let us try to build this bandpass filter using the simple Gm-C structure

Second Order Gm-C Filter
Using Simple Source-Couple

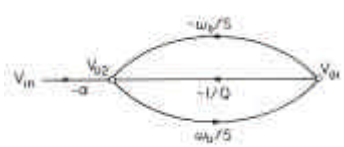

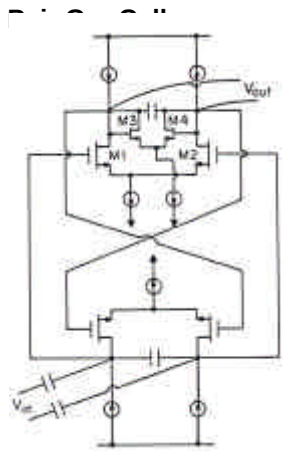

- Center frequency:

$$w_o = \frac{g_m^{M1,2}}{2 \times C_{intg}}$$

- Q function of:

$$Q = \frac{g_m^{M1,2}}{g_m^{M3,4}}$$

To use this structure it is more power efficient to couple resonators through capacitive coupling

Signal Flowgraph
6th Order Bandpass Filter

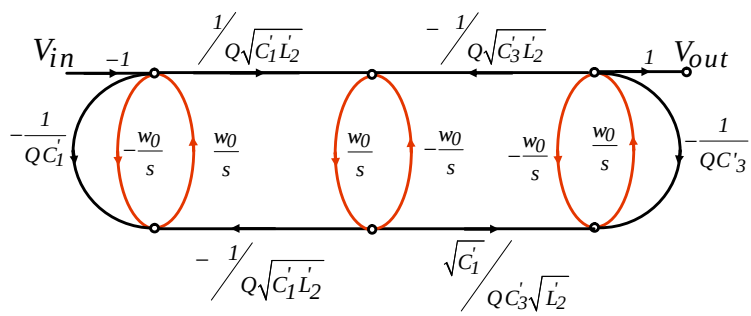

Modified signal flowgraph to have equal coupling between resonators

- In most filter cases $C_1' = C_3'$
- Example: For a butterworth lowpass filter $C_1' = C_3' = 1$ & $L_2' = 2$
- Assume desired overall bandpass filter $Q=10$

Sixth Order Bandpass Filter Signal Flowgraph

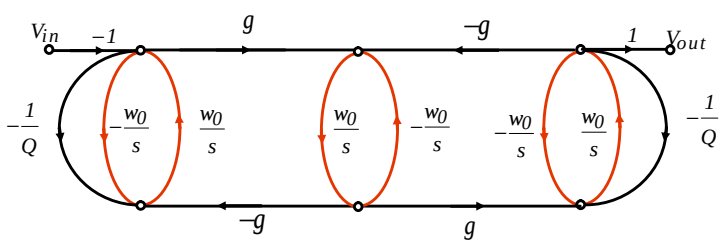

- Where for a Butterworth shape $g = \frac{1}{Q\sqrt{2}}$
- Since $Q=10$ then: $g \approx \frac{1}{14}$

Sixth Order Bandpass Filter Signal Flowgraph

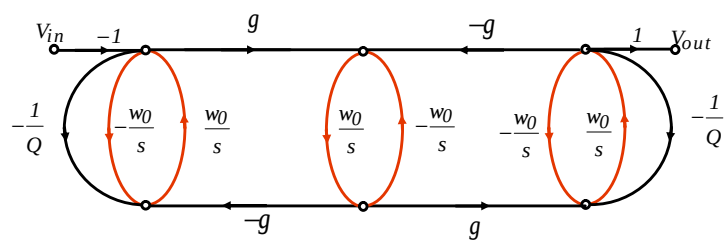

• Coupling paths (γ) between resonators can be implemented with extra differential input pairs → additional power dissipation

•Or modify SFG as shown in next page:

Sixth Order Bandpass Filter Signal Flowgraph SFG Modification

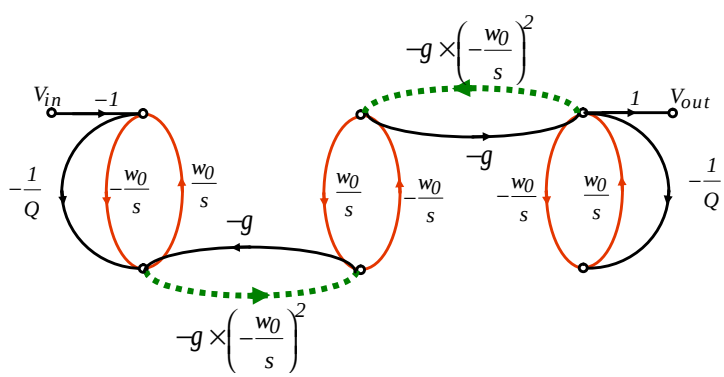

Sixth Order Bandpass Filter Signal Flowgraph SFG Modification

For narrow band filters (high Q) where frequencies within the passband are close to ω_0 narrow-band approximation can be used:

$$\left(\frac{w_0}{w}\right)^2 \approx 1$$

$$-g \times \left(-\frac{w_0}{s}\right)^2 = -g \times \left(\frac{w_0}{w}\right)^2 \approx -g$$

The resulting SFG:

Sixth Order Bandpass Filter Signal Flowgraph SFG Modification

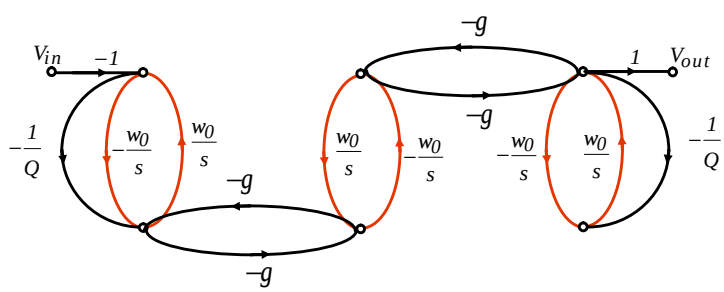

→ Bidirectional coupling paths, can easily be implemented with coupling capacitors → no extra power dissipation

Sixth Order Gm-C Bandpass Filter
Utilizing Simple Source-Coupled Pair Gm-Cell

$$g = \frac{C_k}{2 \times C_{int\,g}}$$

$$g = 1/14$$

$$\rightarrow C_k = \frac{1}{7 \times C_{int\,g}}$$

Parasitic C at integrator output, if unaccounted for, will result in inaccuracy in g

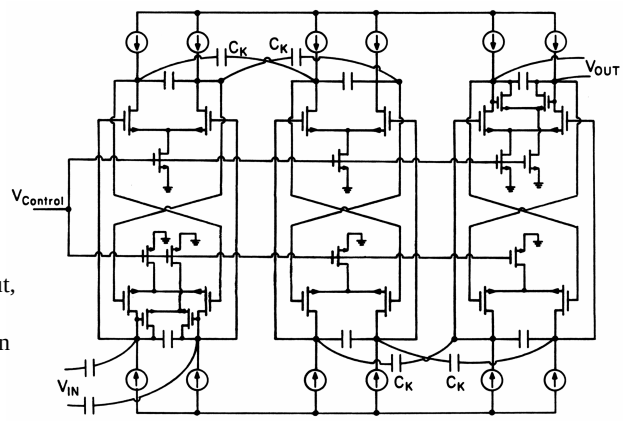

Sixth Order Gm-C Bandpass Filter
Frequency Response Simulation

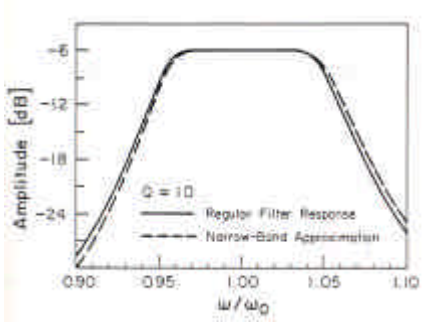

Simplest Form of CMOS Gm-Cell Nonidealities

- DC gain (integrator Q)

$$a = \frac{g_m^{M1,2}}{g_0^{M1,2} + g_{load}}$$

$$a = \frac{2L}{q\left(V_{gs} - V_{th}\right)_{M1,2}}$$

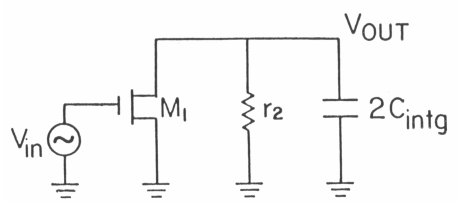

Small Signal Differential Mode Half-Circuit

- Where a denotes DC gain & θ is related to channel length modulation by:

$$l = \frac{q}{L}$$

- Seems no extra poles!

CMOS Gm-Cell High-Frequency Poles

Cross section view of a MOS transistor operating in saturation

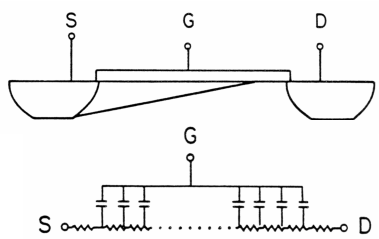

Distributed channel resistance & gate capacitance

- Distributed nature of gate capacitance & channel resistance results in infinite no. of high-frequency poles

CMOS Gm-Cell High-Frequency Poles

$$P_2^{effective} \approx \frac{1}{\sum_{i=2}^{\infty} \frac{1}{P_i}}$$

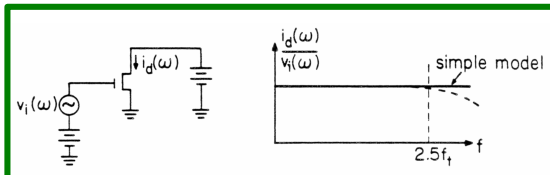

High frequency behavior of an MOS transistor

$$P_2^{effective} \approx 2.5 w_t^{M1,2}$$

$$w_t^{M1,2} = \frac{g_m^{M1,2}}{C_{ox}WL} = \frac{3}{2}\frac{m\left(V_{gs}-V_{th}\right)_{M1,2}}{L^2}$$

- Distributed nature of gate capacitance & channel resistance results in an effective pole at 2.5 times input device cut-off frequency

CMOS Gm-Cell Quality Factor

$$a = \frac{2L}{q\left(V_{gs}-V_{th}\right)_{M1,2}}$$

$$P_2^{effective} = \frac{15}{4}\frac{m\left(V_{gs}-V_{th}\right)_{M1,2}}{L^2}$$

$$Q_{real}^{intg.} \approx \frac{1}{\frac{1}{a} - w_o \sum_{i=2}^{\infty} \frac{1}{p_i}}$$

$$\frac{1}{Q_{real}^{intg.}} \approx \frac{q\left(V_{gs}-V_{th}\right)_{M1,2}}{2L} - \frac{4}{15}\frac{w_o L^2}{m\left(V_{gs}-V_{th}\right)_{M1,2}}$$

- Note that the phase lead associated with DC gain is inversely prop. to L
- The phase lag due to high-freq. poles directly prop. to L

→ For a given ω_o there exists an optimum *L* which cancel the lead/lag phase error resulting in high integrator *Q*

CMOS Gm Cell Channel Length for Optimum Integrator Quality Factor

$$L_{opt.} \approx \left[\frac{15}{4} \frac{q m \left(V_{gs} - V_{th}\right)^2_{M1,2}}{w_o} \right]^{1/3}$$

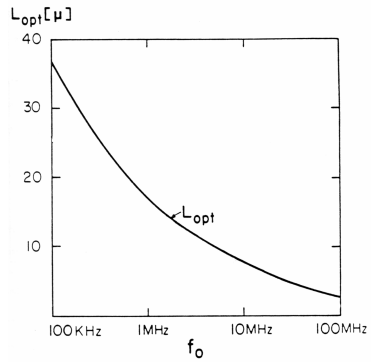

- Optimum channel length computed based on process parameters (could vary from process to process)

Source-Coupled Pair CMOS Gm-Cell Linearity

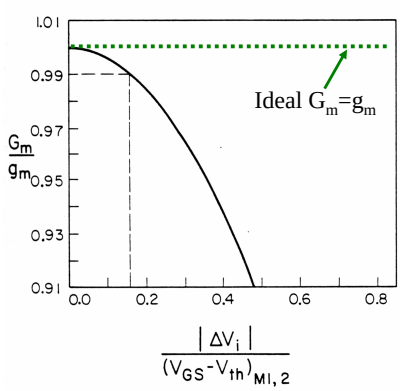

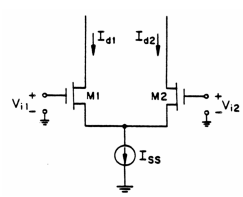

- Large signal G_m drops as input voltage increases
  → Gives rise to filter nonlinearity

Measure of Linearity

$$Vout = a_1 Vin + a_2 Vin^2 + a_3 Vin^3 + ...$$

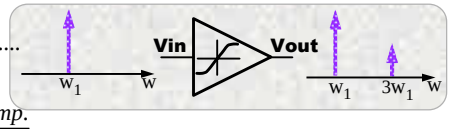

$$HD3 = \frac{amplitude\,3rd\,harmonic\,dist.\ comp.}{amplitude\ fundamental}$$

$$= \frac{1}{4}\frac{a_3}{a_1} Vin^2 + ...$$

$$IM_3 = \frac{amplitude\,3rd\,order\ IM\ \ comp.}{amplitude\ fundamental}$$

$$= \frac{3}{4}\frac{a_3}{a_1} Vin^2 + \frac{25}{8}\frac{a_5}{a_1} Vin^4 + ...$$

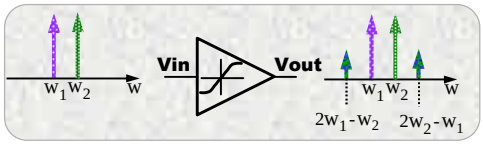

Source-Coupled Pair CMOS Gm-Cell Linearity

$$\Delta I_d = I_{ss}\left[\frac{\Delta v_i}{\left(V_{gs}-V_{th}\right)_{M1,2}}\right]\left\{1-\frac{1}{4}\left[\frac{\Delta v_i}{\left(V_{gs}-V_{th}\right)_{M1,2}}\right]^2\right\}^{1/2} \qquad (1)$$

$$\Delta I_d = a_1 \times \Delta v_i + a_2 \times \Delta v_i^2 + a_3 \times \Delta v_i^3 + ...$$

Series expansion used in (1)

$$a_1 = \frac{I_{ss}}{\left(V_{gs}-V_{th}\right)_{M1,2}} \qquad \& \qquad a_2 = 0$$

$$a_3 = -\frac{I_{ss}}{8\left(V_{gs}-V_{th}\right)^3_{M1,2}} \qquad \& \qquad a_4 = 0$$

$$a_5 = -\frac{I_{ss}}{128\left(V_{gs}-V_{th}\right)^5_{M1,2}} \qquad \& \qquad a_6 = 0$$

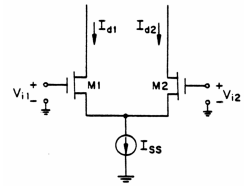

Linearity of the Source-Coupled Pair CMOS Gm-Cell

$$IM3 \approx \frac{3a_3}{4a_1}\hat{v}_i^2 + \frac{25a_5}{8a_1}\hat{v}_i^4 \ldots\ldots\ldots\ldots$$

$$Substituting\ for\ a_1, a_3, \ldots.$$

$$IM3 \approx \frac{3}{32}\left(\frac{\hat{v}_i}{(V_{GS}-V_{th})}\right)^2 + \frac{25}{1024}\left(\frac{\hat{v}_i}{(V_{GS}-V_{th})}\right)^4 \ldots\ldots\ldots\ldots$$

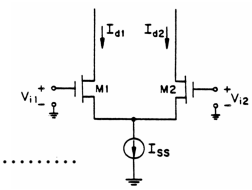

$$\boxed{\hat{v}_{i\,max} \approx 4(V_{GS}-V_{th}) \times \sqrt{\frac{2}{3} \times IM3}}$$

$$IM_3 = 1\% \ \&\ (V_{GS}-V_{th}) = 1V \Rightarrow \hat{V}_{in}^{rms} \approx 230mV$$

- Key point: Max. signal handling capability function of gate-overdrive

Simplest Form of CMOS Gm Cell Disadvantages

•Max. signal handling capability function of gate-overdrive

$$IM_3 \propto (V_{GS}-V_{th})^{-2}$$

•Critical freq. function of gate-overdrive too

$$w_o = \frac{g_m^{M1,2}}{2 \times C_{int\,g}}$$

$$\text{since}\quad g_m = mC_{ox}\frac{W}{L}(V_{gs}-V_{th})$$

$$\text{then}\quad w_o \propto (V_{gs}-V_{th})$$

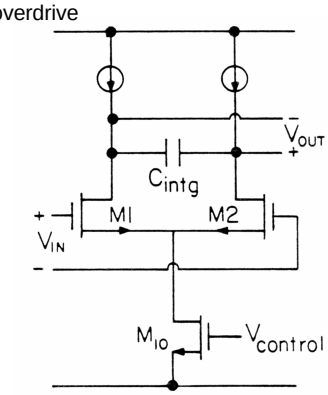

→ Filter tuning affects max. signal handling capability!

Simplest Form of CMOS Gm Cell Removing Dependence of Maximum Signal Handling Capability on Tuning

- Can overcome problem of max. signal handling capability being a function of tuning by providing tuning through :
  - Coarse tuning via switching in/out binary-weighted cross-coupled pairs→ Try to keep gate overdrive voltage constant
  - Fine tuning through varying current sources

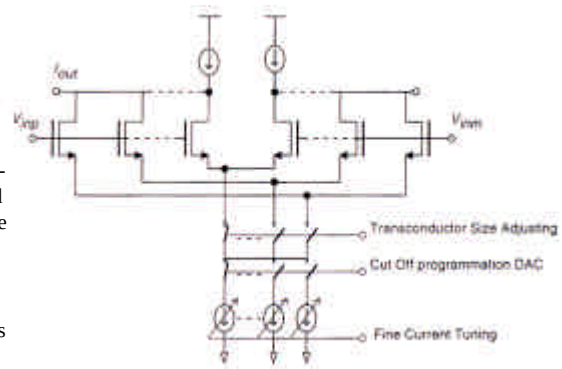

→ Dynamic range dependence on tuning removed (to 1st order)

Ref: R.Castello ,I.Bietti, F. Svelto , "High-Frequency Analog Filters in Deep Submicron Technology , "*International Solid State Circuits Conference*, pp 74-75, 1999.

Dynamic Range for Source-Coupled Pair Based Filter

$$IM_3 = 1\% \ \& \ (V_{GS} - V_{th}) = 1V \ \Rightarrow V_{in}^{rms} \approx 230mV$$

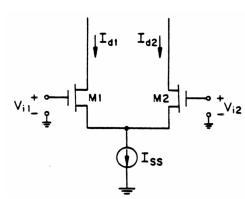

- Minimum detectable signal determined by total noise voltage
- It can be shown for the *6th* order Butterworth bandpass filter noise is given by:

$$\sqrt{\overline{v_o^2}} \approx \sqrt{3\,Q\frac{k\,T}{C_{intg}}}$$

$$Assuming \quad Q = 10 \quad C_{intg} = 5pF$$

$$v_{noise}^{rms} \approx 160mV$$

$$since \ \ v_{max}^{rms} = 230mV$$

$$Dynamic\ Range \approx 63dB$$

Improving the Max. Signal Handling Capability of the Source-Coupled Pair Gm-Cell

- 2nd source-coupled pair added to subtract current proportional to nonlinear component associated with the main SCP

$$\frac{I_{ss1}}{I_{ss3}} = b \quad \& \quad \frac{\left(V_{gs} - V_{th}\right)_{M1,2}}{\left(V_{gs} - V_{th}\right)_{M3,4}} = a \quad and\ thus$$

$$\frac{\left(\frac{W}{L}\right)_{M1,2}}{\left(\frac{W}{L}\right)_{M3,4}} = \frac{b}{a^2}$$

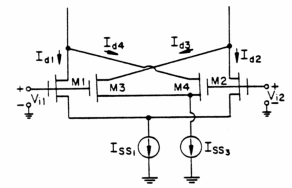

Improving the Max. Signal Handling Capability of the Source-Coupled Pair Gm

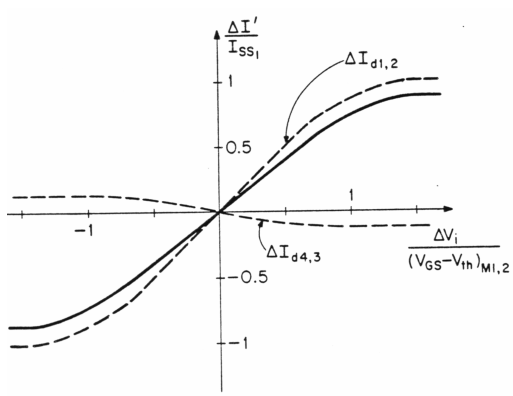

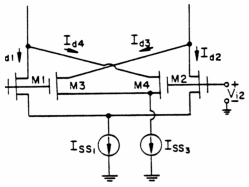

Ref: H. Khorramabadi, "High-Frequency CMOS Continuous-Time Filters," U. C. Berkeley, Department of Electrical Engineering, Ph.D. Thesis, February 1985 (ERL Memorandom No. UCB/ERL M85/19).

Improving the Max. Signal Handling Capability of the Source-Coupled Pair Gm

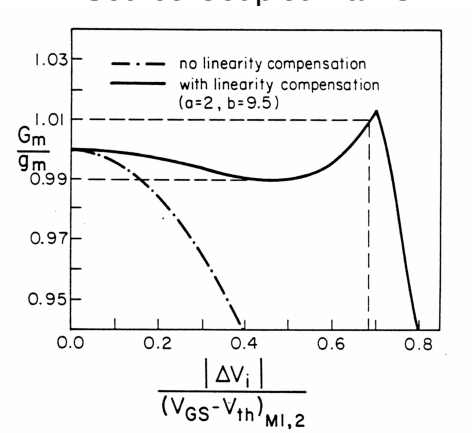

- Improves maximum signal handling capability by about 12dB
  → Dynamic range theoretically improved to 63+12=75dB

Simplest Form of CMOS Gm-Cell

- Pros
  - Capable of very high frequency performance (highest?)
  - Simple design
- Cons
  - Tuning affects power dissipation
  - Tuning affects max. signal handling capability (can overcome)
  - Limited linearity (possible to improve)

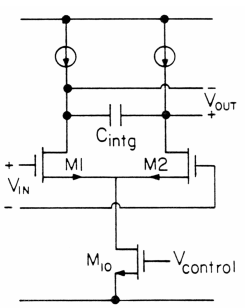

Ref: H. Khorramabadi and P.R. Gray, "High Frequency CMOS continuous-time filters," *IEEE Journal of Solid-State Circuits*, Vol.-SC-19, No. 6, pp.939-948, Dec. 1984.

Gm-Cell
Source-Coupled Pair with Degeneration

$$I_d = \frac{mC_{ox}}{2}\frac{W}{L}\left[2\left(V_{gs}-V_{th}\right)V_{ds}-V_{ds}^2\right]$$

$$g_{ds} = \frac{\partial I_d}{\partial V_{ds}} \approx mC_{ox}\frac{W}{L}\left(V_{gs}-V_{th}\right)\Big|_{V_{ds}\ small}$$

$$g_{eff} = \frac{1}{\frac{1}{g_{ds}^{M3}}+\frac{2}{g_m^{M1,2}}}$$

$$for\ g_m^{M1,2} >> g_{ds}^{M3}$$

$$g_{eff} \approx g_{ds}^{M3}$$

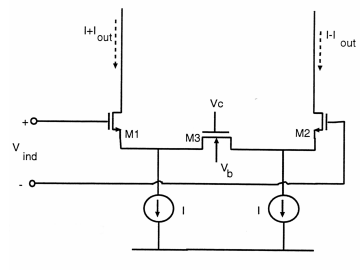

M3 operating in triode mode → source degeneration→ determines overall gm

Gm-Cell
Source-Coupled Pair with Degeneration

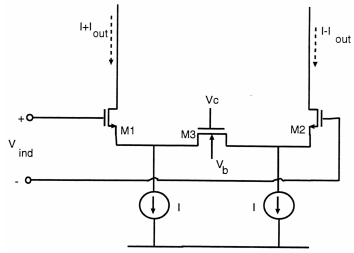

- Pros
  - Moderate linearity
  - Continuous tuning provided by Vc
  - Tuning does not affect power dissipation
- Cons
  - Extra poles associated with the source of M1,2 → Low frequency applications only

Ref: Y. Tsividis, Z. Czarnul and S.C. Fang, "MOS transconductors and integrators with high linearity," *Electronics Letters*, vol. 22, pp. 245-246, Feb. 27, 1986

BiCMOS Gm-Cell

- MOSFET in triode mode:

$$I_d = \frac{mC_{ox}}{2}\frac{W}{L}\left[2\left(V_{gs}-V_{th}\right)V_{ds}-V_{ds}^2\right]$$

- Note that if Vds is kept constant:

$$g_m = \frac{\partial I_d}{\partial V_{gs}} = mC_{ox}\frac{W}{L}V_{ds}$$

- Linearity performance → keep *gm* constant→ function of how constant *Vds* can be held
  - Gain @ Node X must be minimized

$$A_x = g_m^{M1} / g_m^{B1}$$

- Since for a given current, *gm* of BJT is larger compared to MOS preferable to use BJT
- Extra pole at node X

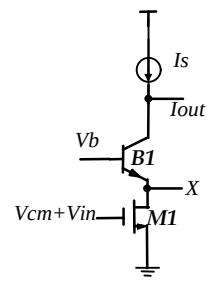

gm can be varied by changing *Vb* and thus *Vds*

Alternative Fully CMOS Gm-Cell

- BJT replaced by a MOS transistor with boosted gm
- Lower frequency of operation compared to the BiCMOS version due to more parasitic capacitance at node A & B

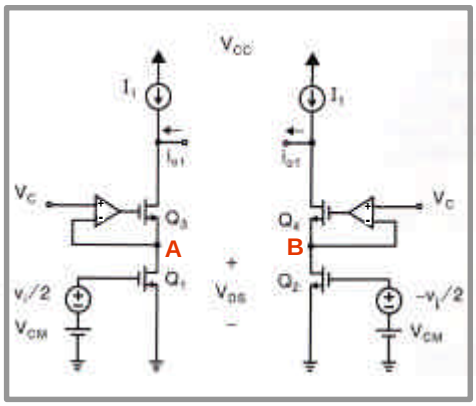

BiCMOS Gm-C Integrator

- Differential- needs common-mode feedback ckt
- Freq. tuned by varying Vb

- Design tradeoffs:
  - Extra poles at the input device drain junctions
  - Input devices have to be small to minimize parasitic poles
  - Results in high input-referred offset voltage → could drive ckt into non-linear region
  - Small devices → high 1/f noise

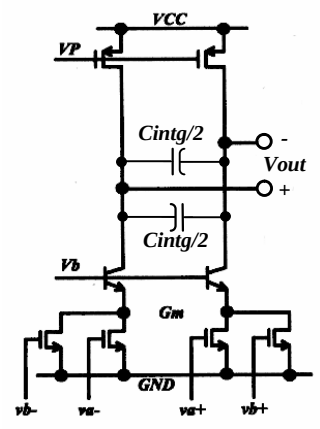

7th Order Elliptic Gm-C LPF For CDMA RX Baseband Application

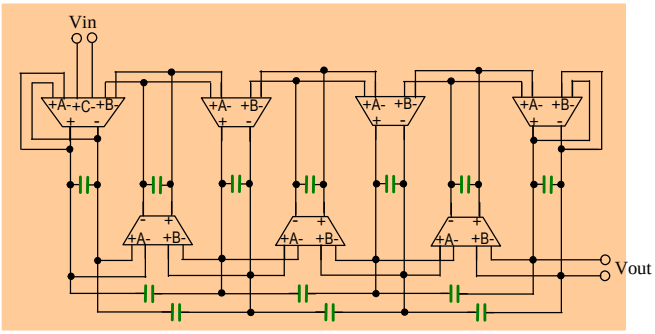

- Gm-Cell in previous page used to build a 7th order elliptic filter for CDMA baseband applications (650kHz corner frequency)
- In-band dynamic range of <50dB achieved

Comparison of 7th Order Gm-C versus Opamp-RC LPF

- Gm-C filter requires 4 times less intg. cap. area compared to Opamp-RC
  - → For low-noise applications where filter area is dominated by cap. area could make a significant difference in the total area
- Opamp-RC linearity superior compared to Gm-C
- Power dissipation tends to be lower for Gm-C since output is high impedance and thus no need for buffering

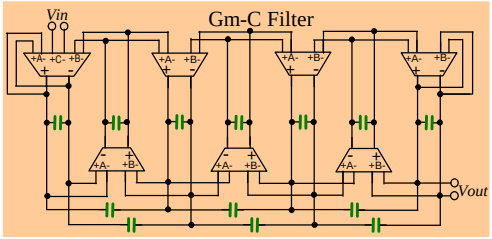

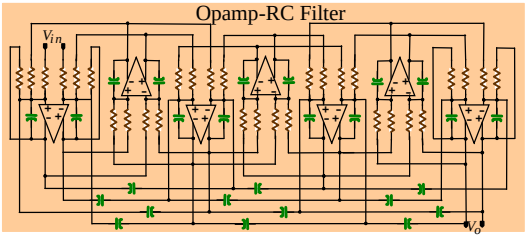

BiCMOS Gm-OTA-C Integrator

- Used to build filter for disk-drive applications
- Since high frequency of operation, time-constant sensitivity to parasitic caps significant.
  - → Opamp used
- M2 & M3 added to compensate for phase lag (provides phase lead)

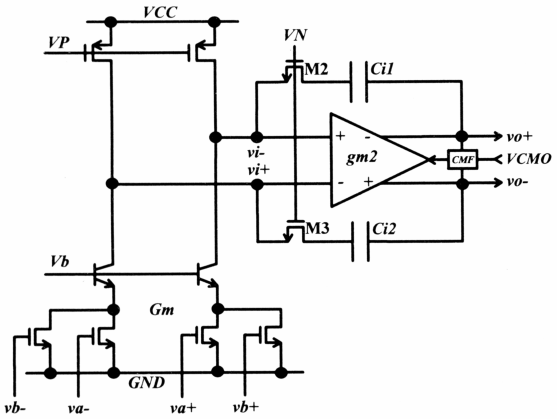

Ref: C. Laber and P.Gray, "A 20MHz 6th Order BiCMOS Parasitic Insensitive Continuous-time Filter & Second Order Equalizer Optimized for Disk Drive Read Channels," *IEEE Journal of Solid State Circuits*, Vol. 28, pp. 462-470, April 1993.

6th Order BiCMOS Continuous-time Filter & Second Order Equalizer for Disk Drive Read Channels

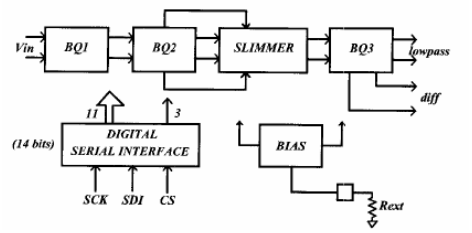

- Gm-C-opamp of the previous page used to build a 6th order filter for Disk Drive
- Filter consists of 3 Biquad with max. Q of 2 each
- Performance in the order of 40dB SNDR achieved for up to 20MHz corner frequency

Ref: C. Laber and P.Gray, "A 20MHz 6th Order BiCMOS Parasitic Insensitive Continuous-time Filter & Second Order Equalizer Optimized for Disk Drive Read Channels," *IEEE Journal of Solid State Circuits*, Vol. 28, pp. 462-470, April 1993.

Gm-Cell Source-Coupled Pair with Degeneration

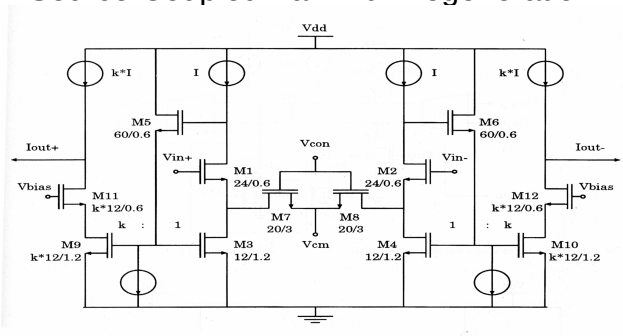

– Gm-cell intended for low Q disk drive filter

Ref: I.Mehr and D.R.Welland, "A CMOS Continuous-Time Gm-C Filter for PRML Read Channel Applications at 150 Mb/s and Beyond", IEEE Journal of Solid-State Circuits, April 1997, Vol.32, No.4, pp. 499-513.

Gm-Cell
Source-Coupled Pair with Degeneration

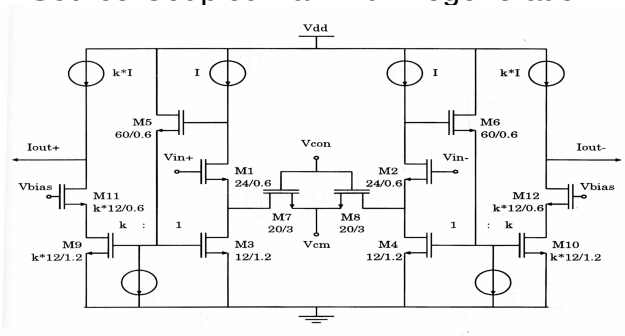

- M7,8 operating in triode mode determine the gm of the cell
- Feedback provided by M5,6 maintains the gate-source voltage of M1,2 constant by forcing their current to be constant→ helps linearize *rds* of M7,8
- Current mirrored to the output via M9,10 with a factor of *k*
- Performance level of about 50dB SNDR at fcorner of 25MHz achieved

BiCMOS Gm-C Integrator

- Needs higher supply voltage compared to the previous design since quite a few devices are stacked vertically
- M1,2 → triode mode
- Q1,2 → hold V_{ds} of M1,2 constant
- Current ID used to tune filter critical frequency by varying V_{ds} of M1,2 and thus *gm* of M1,2
- M3, M4 operate in triode mode and added to provide CMFB

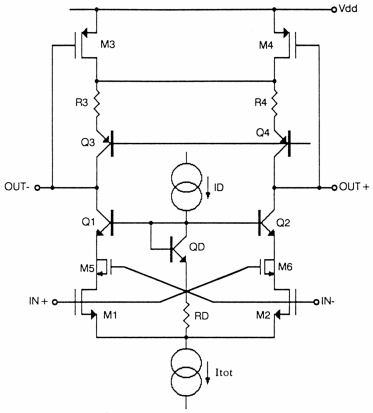

Ref: R. Alini, A. Baschirotto, and R. Castello, "Tunable BiCMOS Continuous-Time Filter for High-Frequency Applications," *IEEE Journal of Solid State Circuits,* Vol. 27, No. 12, pp. 1905-1915, Dec. 1992.

BiCMOS Gm-C Integrator

- M5 & M6 configured as capacitors added to compensate for RHP zero due to Cgd of M1,2 (moves it to LHP) size of M5,6 → 1/3 of M1,2

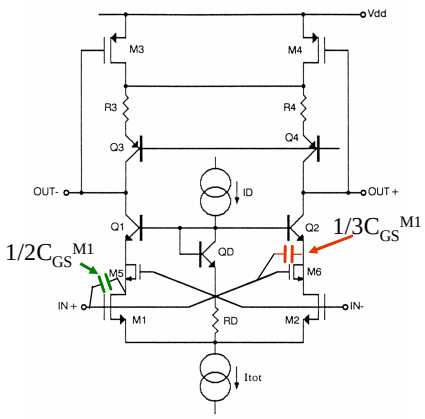

Ref: R. Alini, A. Baschirotto, and R. Castello, "Tunable BiCMOS Continuous-Time Filter for High-Frequency Applications," *IEEE Journal of Solid State Circuits,* Vol. 27, No. 12, pp. 1905-1915, Dec. 1992.

BiCMOS Gm-C Filter For Disk-Drive Application

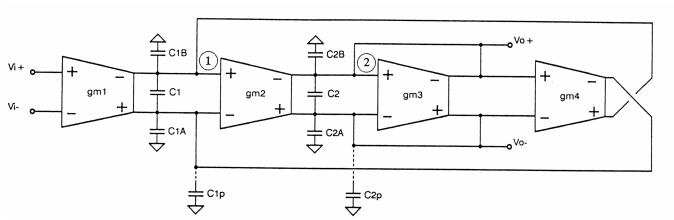

- Using the integrators shown in the previous page
- Biquad filter for disk drives
- *gm1=gm2=gm4=2gm3*
- *Q=2*
- Tunable from 8MHz to 32MHz

Ref: R. Alini, A. Baschirotto, and R. Castello, "Tunable BiCMOS Continuous-Time Filter for High-Frequency Applications," *IEEE Journal of Solid State Circuits,* Vol. 27, No. 12, pp. 1905-1915, Dec. 1992.

Summary Continuous-Time Filters

- Opamp RC filters
  - Good linearity → High dynamic range (60-90dB)
  - Only discrete tuning possible
  - Medium usable signal bandwidth (<10MHz)
- Opamp MOSFET-C
  - Linearity compromised (typical dynamic range 40-60dB)
  - Continuous tuning possible
  - Low usable signal bandwidth (<5MHz)
- Opamp MOSFET-RC
  - Improved linearity compared to Opamp MOSFET-C (D.R. 50-90dB)
  - Continuous tuning possible
  - Low usable signal bandwidth (<5MHz)
- Gm-C
  - Highest frequency performance (at least an order of magnitude higher compared to the rest <100MHz)
  - Dynamic range not as high as Opamp RC but better than Opamp MOSFET-C (40-70dB)

Switched-Capacitor Filters
Example: Codec Chip

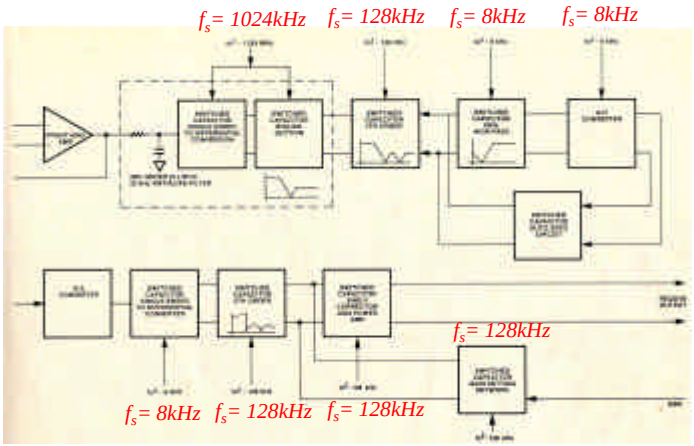

Ref: D. Senderowicz et. al, "A Family of Differential NMOS Analog Circuits for PCM Codec Filter Chip," *IEEE Journal of Solid-State Circuits*, Vol.-SC-17, No. 6, pp.1014-1023, Dec. 1982.

Switched-Capacitor Resistor

- Capacitor C is the "switched capacitor"
- Non-overlapping clocks ϕ_1 and ϕ_2 control switches S1 and S2, respectively
- v_{IN} is sampled at the falling edge of ϕ_1
  - Sampling frequency f_S
- Next, ϕ_2 rises and the voltage across C is transferred to v_{OUT}
- Why is this a resistor?

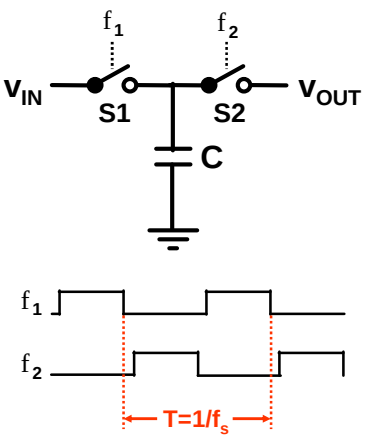

Switched-Capacitor Resistors

- Charge transferred from v_{IN} to v_{OUT} during each clock cycle is:
- Average current flowing from v_{IN} to v_{OUT} is:

$$Q = C(v_{IN} - v_{OUT})$$

$$i = Q/t = Qxf_S$$

$$i = f_S C(v_{IN} - v_{OUT})$$

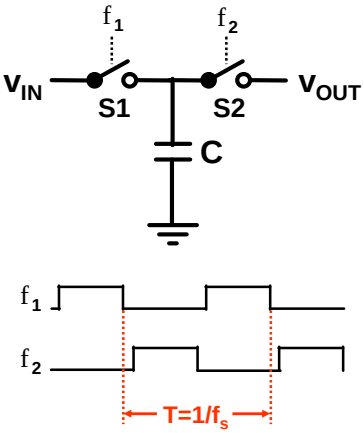

Switched-Capacitor Resistors

$$i = f_S C(v_{IN} - v_{OUT})$$

With the current through the switched capacitor resistor proportional to the voltage across it, the equivalent "switched capacitor resistance" is:

$$R_{eq} = \frac{1}{f_S C}$$

$$Example$$

$$f = 1MHz, C = 1pF$$

$$\rightarrow R_{eq} = 1Mega\Omega$$

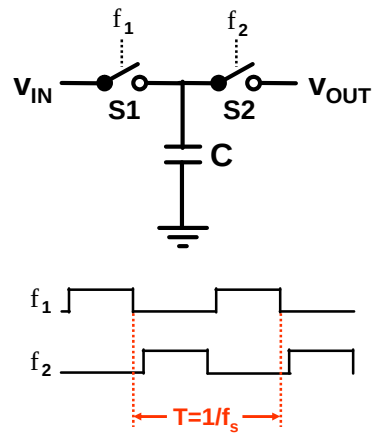

Switched-Capacitor Filter

- Let's build a "SC" filter …
- We'll start with a simple RC LPF
- Replace the physical resistor by an equivalent SC resistor
- 3-dB bandwidth:

$$w_{-3dB} = \frac{1}{R_{eq} C_2} = f_s \times \frac{C_1}{C_2}$$

$$f_{-3dB} = \frac{1}{2p} f_s \times \frac{C_1}{C_2}$$

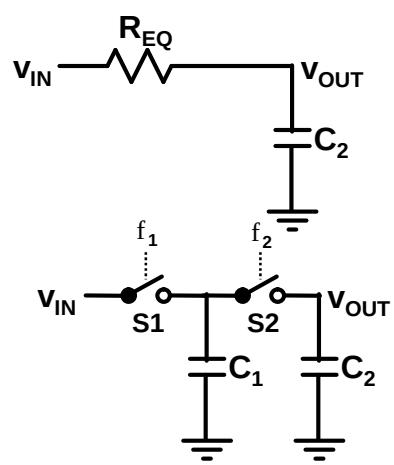

Switched-Capacitor Filter Advantage versus Continuous-Time Filters

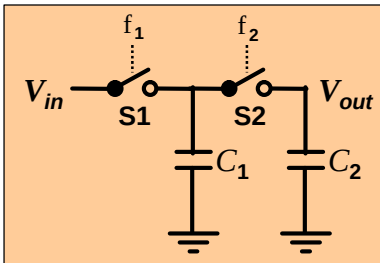

$$f_{-3dB} = \frac{1}{2p} f_s \times \frac{C_1}{C_2}$$

- Corner freq. proportional to:
  System clock (accurate to few ppm)
  C ratio accurate → < 0.1%

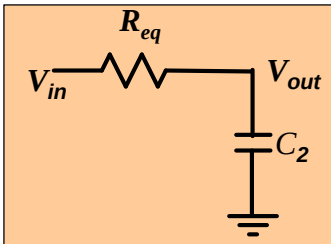

$$f_{-3dB} = \frac{1}{2p} \times \frac{1}{R_{eq} C_2}$$

- Corner freq. proportional to:
  Absolute value of Rs & Cs
  Poor accuracy → 20 to 50%

Main advantage of SC filter inherent corner frequency accuracy

Typical Sampling Process

Continuous-Time(CT) ⇒ Sampled Data (SD)

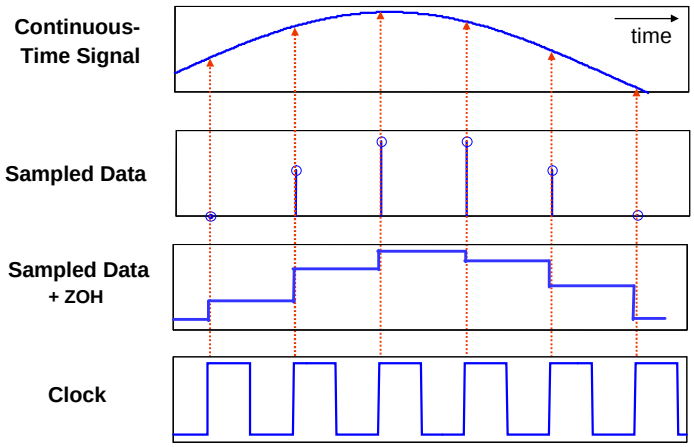

Uniform Sampling

Nomenclature:

Continuous time signal x(t)

Sampling interval T

Sampling frequency $f_s = 1/T$

Sampled signal x(kT) = x(k)

- Problem: Multiple continuous time signals can yield exactly the same discrete time signal
- Let's look at samples taken at 1µs intervals of several sinusoidal waveforms …

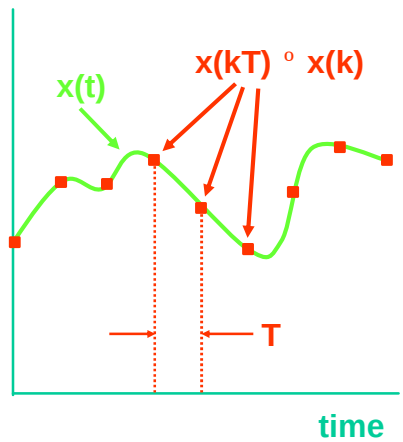

Sampling Sine Waves

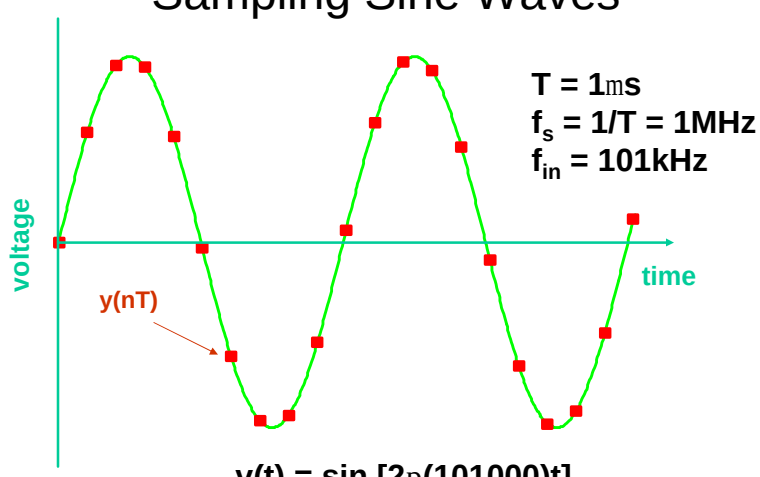

T = 1ms
f_s = 1/T = 1MHz
f_{in} = 101kHz

v(t) = sin [2p(101000)t]

Sampling Sine Waves

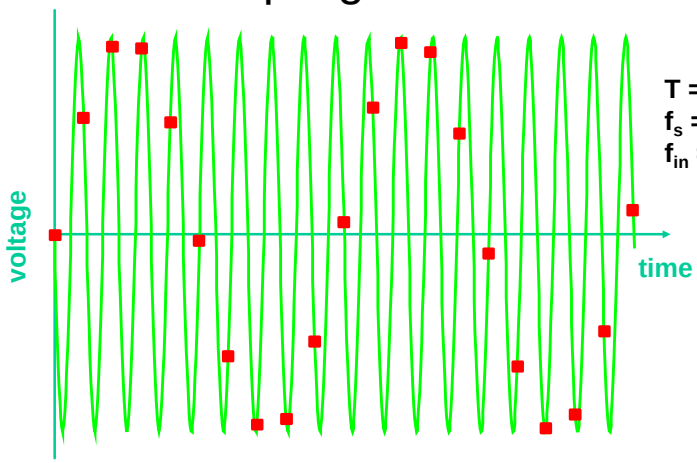

T = 1ms
f_s = 1MHz
f_{in} = 899kHz

v(t) = - sin [2p(899000)t]

Sampling Sine Waves

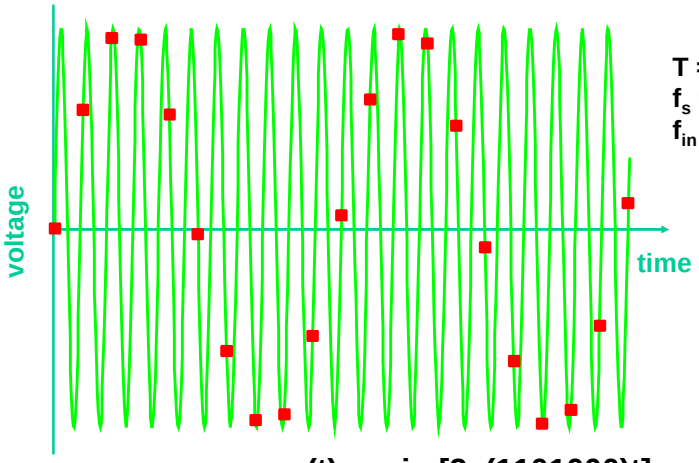

T = 1ms
f_s = 1MHz
f_{in} = 1101kHz

v(t) = sin [2p(1101000)t]