EE 249: Embedded System Design
Fall 2008, Homework 2

Due Nov 6, 4:10 PM

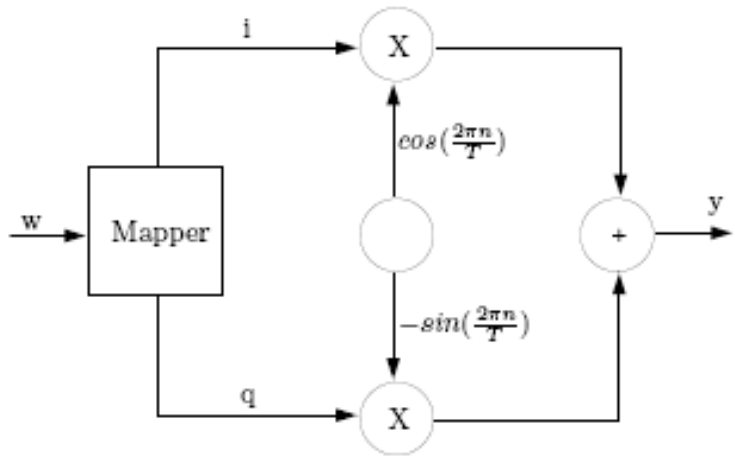

Fig 1: Architecture of a Modulator

1. Using the modulator, create the following models:

    a. Describe the modulator using the CFSM model of computation. In particular, write each block in the diagram as a CFSM. You may assume to have two functions f_x and f_y that can be called on transitions of the mapper CSFM.

    b. Describe the modulator using DataFlow model of computation.

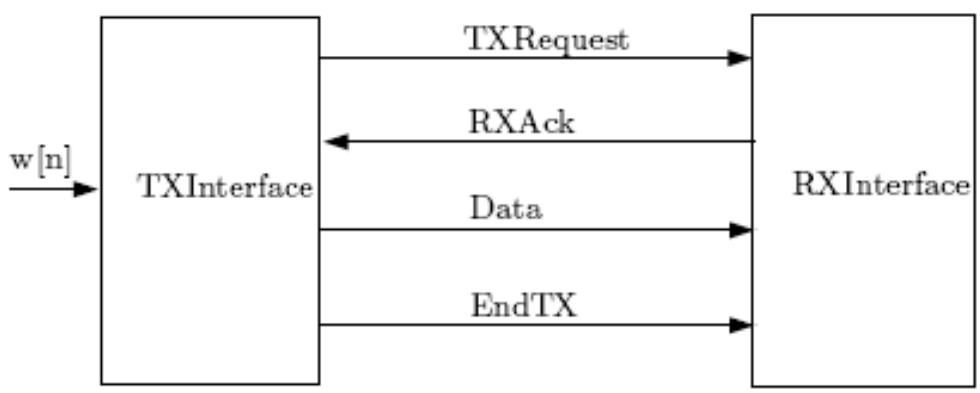

Fig 2: TX/RX Interface Protocol

2. A simple protocol is depicted in Figure 2. W[n], an array of n words, is an input to TXInterface and starts the protocol. TXInterface stores the array in an internal state variable and starts sending it, word at a time, to the receiver. A transmission is initiated by the TXInterface with a TXRequest signal. The receiver answers with an ack. Then TXInterface sends each word while waiting for an ack before sending another. To close the session, the TXInterface sends and end of transmission signal and before going to idle again, TXInterface waits for the last acknowledgment.

    a. Describe the two interfaces using CFSM model of computation.

    b. Describe the two interfaces using DataFlow model of computation.

3. Use Tagged Signal Model to describe a simple system. We use a dataFlow model of computation to describe an infinite impulse response system. We will use the two processes shown in figure 3 where + is an adder and k multiplies the input signal by a constant.

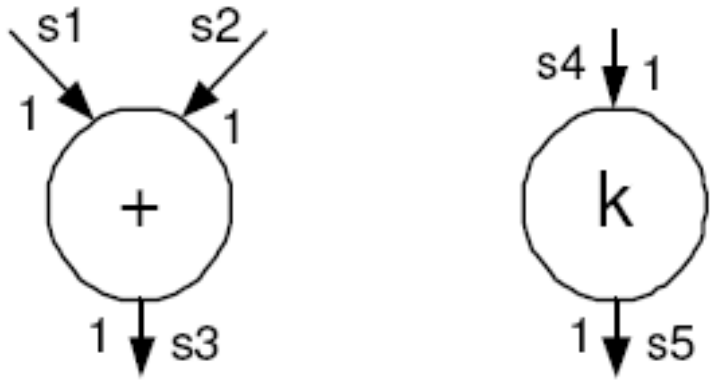

Fig 3: DataFlow actors

The denotational description of such filter is the following:

$$y_i = x_i + k*y_{i-1}$$

where x is the input sequence of samples and y is the output sequence of samples.

a. Describe the set of values V that you are going to use. Write a possible input signal x. Describe all possible behaviors of the processes + and k in figure 3.

b. Using interconnection processes, the two processes + and k and the operation of projection, build an IIR first order filter with input x and output y.

c. Describe the IIR filter without using the projection operator. How many signals does the resulting process have? Describe the set of tags and all the signals of the process.

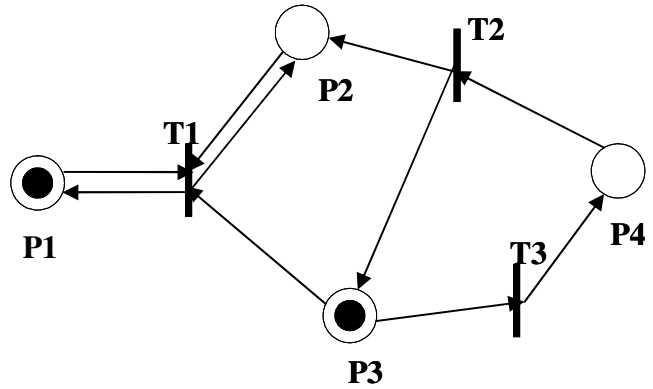

Fig 4: Petri Net: PN1

4. Consider the Petri Net in Figure 4. We will call it PN1

a. Derive its coverability tree

b. Find PN2 with same coverability tree and marking M=(1,1,0,0) is not reachable from the initial marking M0=(1,0,1,0).

5. Implement two classes called *Place* and *Transition* in the Metropolis framework in such a way that any legal composition of those classes is a Petri-Net.