# EE194-EE290C

## 28 nm SoC for IoT

Acknowledgement: Wayne Stark EE455 Lecture Notes, University of Michigan

# Noise

- Unwanted electric signals come from a variety of sources, both from
  - Naturally occurring noise (Atmospheric disturbances, extraterrestrial radiation, random electron motion)
  - Human interference. (Other communication systems, Lighting, ignition etc.)

- One unavoidable electrical noise is the thermal motion of electrons in conducting media
  - Modeled as white noise, a useful model in communication. (AWGN channel)

When a resistance **R** at a temperature **T,** random electron motion produces a noise voltage **v(t)** a the open terminals. Consistent with the central-limit theorem, **v(t)** has a Gaussian distribution with zero mean and variance:

$$\overline{v^2} = \sigma_v^2 = \frac{2(\pi kT)^2}{3h} R$$

Units: $V^2$

# Noise

$$\overline{v^2} = \sigma_v^2 = \frac{2(\pi kT)^2}{3h} R$$ Units: $V^2$

For all practical purposes, the mean square voltage spectral density of thermal noise is constant at:

$$G_v(f) = 2RkT$$ Units: $V^2/Hz$

$$P_a = \frac{\left\langle \left[ v_s(t)/2 \right]^2 \right\rangle}{R_s} = \frac{\left\langle v_s^2(t) \right\rangle}{4R_s}$$

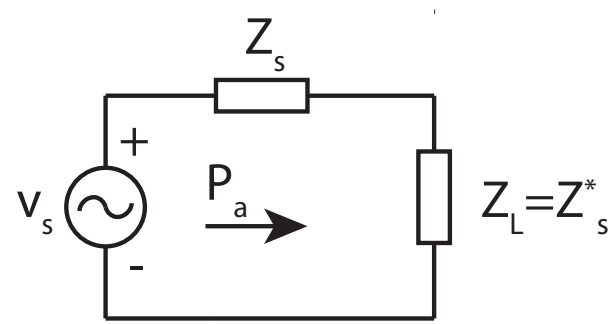


$$G_a(f) = \frac{G_v(f)}{4R} = \frac{kT}{2} = \frac{N_o}{2}$$ Units: W/Hz

All frequency components in equal proportion and is therefore called **white noise**.

# Noise Figure (NF)

Noise figure (NF) measure the degradation of Signal-to-Noise ratio (SNR) caused by components in a signal chain.

$$F = \frac{SNR_{in}}{SNR_{out}}$$ Units: Dimensionless

$$NF = 10\log_{10}\left(F\right) = 10\log_{10}\left(\frac{SNR_{in}}{SNR_{out}}\right) = SNR_{in,dB} - SNR_{out,dB}$$ Units: Dimensionless

It is a number by which the performance of a radio receiver can be specified.
Lower the better.

# Link Budget

Friis Equation:

$$\frac{\mathrm{P_r}}{P_t} = G_t G_r \left( \frac{\lambda}{4\pi R} \right)^2$$

$$\mathrm{P_r} = P_t + G_t + G_r + 20\log_{10}\left( \frac{\lambda}{4\pi R} \right)$$

Gain has units of dB and power has units of dBm or dBW.

# Example Link Budget

| | |
|---|---|
| $P_t$ (Transmit power) | -5 dBm (316.2µW) |
| $G_t$ (Transmit antenna Gain) | 0 dB |
| $G_r$ (Receive antenna Gain) | 0 dB |
| λ (2.45 GHz) | 0.12491 m |
| $P_r$ (Received power) | -75 dBm (31.6pW) |
| Link Margin | 70 dB |
| Distance (d) | ~17 m |

$$NF < R_{ss} - SNR_{\min} + 174 - 10\log_{10}(BW)$$

# Receiver NF

$$NF < R_{ss} - SNR_{\min} + 174 - 10\log_{10}(BW)$$

For BLE: $P_e = 0.1\% = 10^{-3}$

$$SNR = \frac{Signal}{Noise} = \frac{E_b \times R}{N_o \times B} = \frac{E_b}{N_o}$$

$E_b/N_o$ depends on the type of modulation and demodulator.

# Matlab Signal & Noise Modeling

According to the sampling theorem we can represent **x(t)** by samples at rate $\mathbf{2f_{max}}$ .

In addition, assume that **x(t)** is causal so that x(t) = 0 for t < 0.

The Fourier transform of x(t) is given by

$$X(f) = \int_{-\infty}^{\infty} x(t) e^{-j2\pi ft} dt$$

$$= \int_{0}^{\infty} x(t) e^{-j2\pi ft} \, dt$$

Notice that when **x(t)** is real then **X(−f ) = X*(f )**.

# Matlab Signal & Noise Modeling

The inverse Fourier transform is

$$x(t) = \int_{-\infty}^{\infty} X(f) e^{j2\pi ft}\, df$$

$$= \int_{-f_{\max}}^{f_{\max}} X(f) e^{j2\pi ft}\, df$$

Now we can approximate these integrals with finite sums.

# Matlab Signal & Noise Modeling

- Since the highest frequency is $\mathbf{f_{max}}$ we sample at a rate $\mathbf{2f_{max}}$ .
- Thus the samples are separated in time by $\mathbf{\Delta t = 1/(2f_{max})}$.
- Suppose we have **N** samples in the time domain.
- We can reconstruct these **N** samples in the time domain with just **N** samples in the frequency domain.
- The spacing in the frequency domain is $\mathbf{\Delta f = 2f_{max}/N}$.
- Since $\mathbf{\Delta t = 1/(2f_{max})}$ and $\mathbf{\Delta f = 2f_{max}/N}$

$$\Delta f \Delta t = \frac{1}{N}$$

- That is, we are dividing the interval of the frequency response from $\mathbf{-f_{max}}$ to $\mathbf{f_{max}}$ into **N** discrete frequencies and we are dividing time from **0** to $\mathbf{(N-1)\,\Delta t}$ into **N** discrete time samples.

# Matlab Signal & Noise Modeling

Then for **$|f|<f_{max}$**

$$X(f) = \int_0^{\infty} x(t) e^{-j2\pi ft}\, dt$$

$$\approx \sum_{l=0}^{N-1} x(l\Delta t) e^{-j2\pi fl\Delta t} \Delta t$$

$$X_m = X(m\Delta f) = \Delta t \sum_{l=0}^{N-1} x(l\Delta t) e^{-j2\pi m\Delta f l\Delta t}$$

$$= \Delta t \sum_{l=0}^{N-1} x(l\Delta t) e^{-j2\pi ml/N}$$

# Matlab Signal & Noise Modeling

- Thus the above expression for $\mathbf{X_m}$ is valid for $\mathbf{0 \le |m| \le N/2}$.
- Notice that $\mathbf{X_{-m} = X_{N-m}}$.
- In MATLAB the operation FFT takes an input vector (indexed from 1 to N) and produces an output vector (indexed from 1 to N).
- The input-output relation is

$$X_k = \sum_{n=1}^{N} x_n e^{-j2\pi(k-1)(n-1)/N} \qquad k = 1, \ldots, N$$

The input should correspond to the samples starting at time **0** up to time **(N – 1)Δt**. Notice that in order to get the correct magnitude of the frequency response we must multiply what MATLAB produces by **Δt**.

# Matlab Signal & Noise Modeling

- The output samples from **1** to **N/2** (when normalized appropriately) correspond to the frequency response $\mathbf{X(0), X(\Delta f), \ldots, X((N/2)\Delta f) = X(f_{max} - \Delta f)}$.
- The samples from **N/2 + 2** to **N** correspond to the frequency response from $\mathbf{X(-f_{max} + \Delta f), \ldots X(-\Delta f)}$.
- The order can be reversed into the logical order with the MATLAB command fftshift.

# Matlab Signal & Noise Modeling

| Matlab Index | Frequency | Matlab Index | Frequency |
|---|---|---|---|
| 1 | 0 | N/2+1 | $-f_{max}$ |
| 2 | $\Delta f$ | N/2+2 | $-f_{max}+\Delta f$ |
| 3 | $2\Delta f$ | … | … |
| … | … | N/2+k | $-f_{max}+(k-1)\ \Delta f$ |
| m | $(m-1)\ \Delta f$ | … | … |
| … | … | N/2+(fmax-f2)/Δf +1 | $-f_2$ |
| (f1/Δf)+1 | $f_1$ | … | … |
| … | … | N-1 | $-2\Delta f$ |
| N/2 | $f_{max}-\Delta f$ | N | $-\Delta f$ |

# Matlab Signal & Noise Modeling

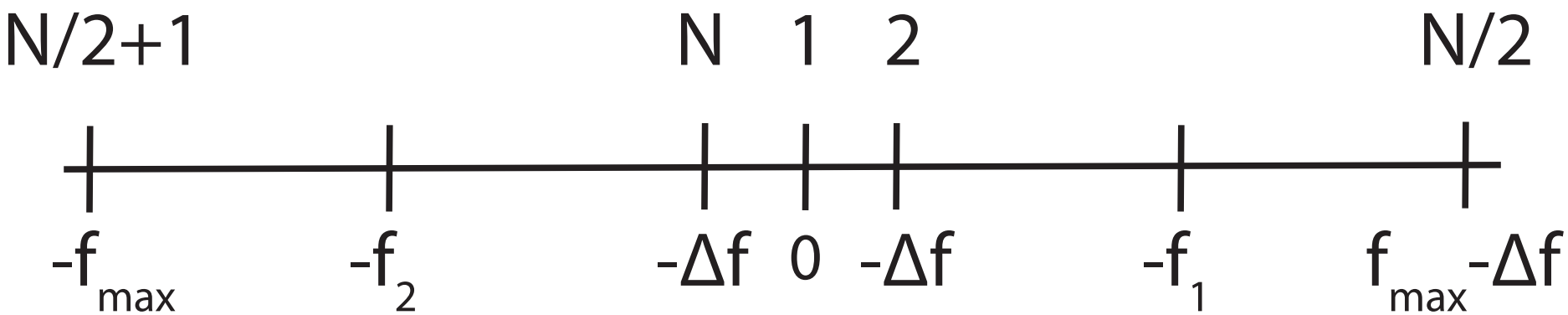

# Matlab FFT Caveat

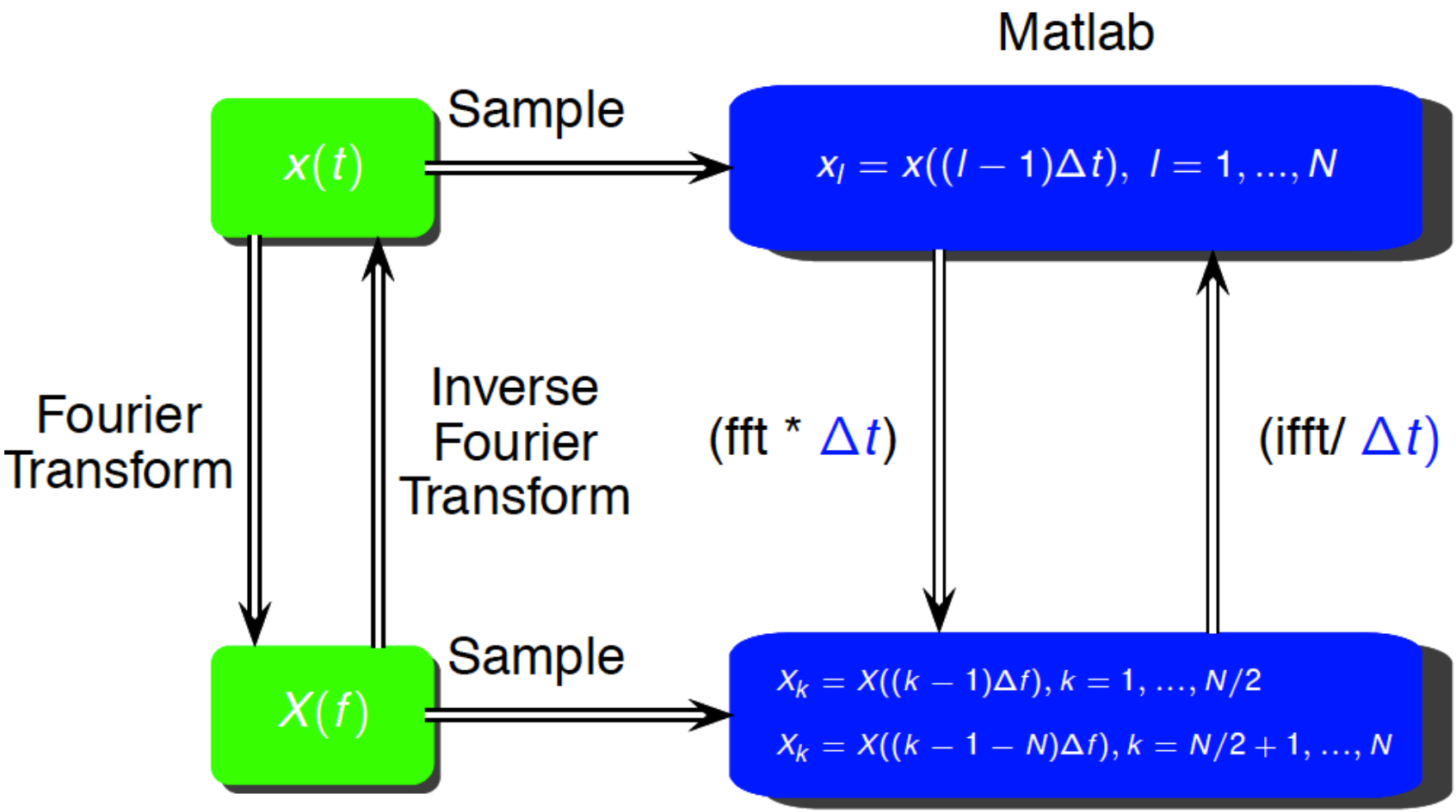

# Simulating Noise

- In a computer simulation of a communication system we represent a continuous time signal with samples according to the sampling theorem.
- A signal can be represented if the highest frequency content is less than half the sampling rate.
- Thus if $\mathbf{f_s}$ represents the sampling rate the simulation bandwidth is $\mathbf{f_s/2}$.
- If we consider white Gaussian noise the noise has equal power at all frequencies up to the simulation bandwidth.

# Simulating Noise

- Thus the power spectral density of the noise in the simulation is

$$S_n(f) = N_0 / 2 \qquad -f_s / 2 < f < f_s / 2$$

- The noise samples (with this finite bandwidth) have variance

$$\sigma^2 = \int_{-f_s/2}^{f_s/2} S_n(f)\,df = \int_{-f_s/2}^{f_s/2} \frac{N_o}{2}\,df = N_o f_{\max}$$

# Digital Baseband Block Diagram

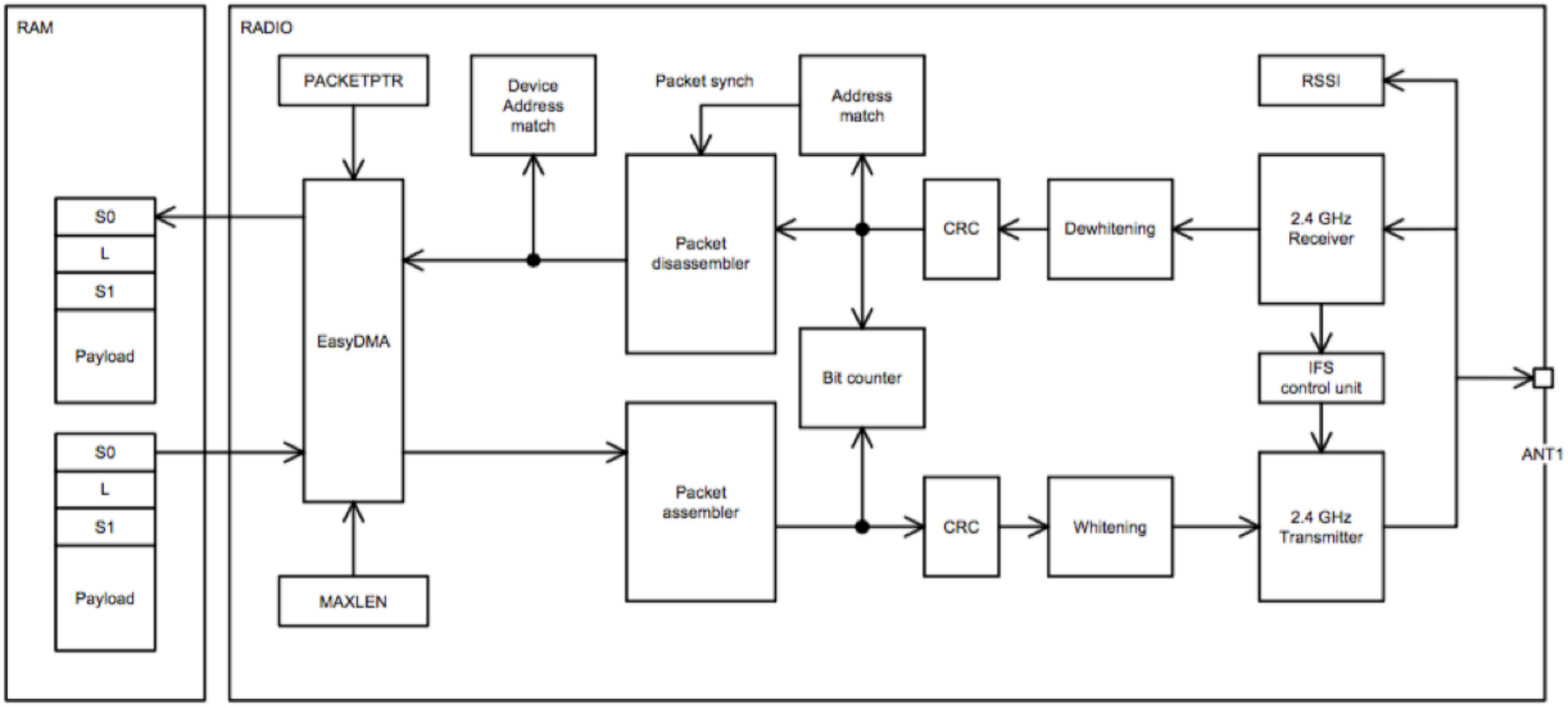


Nordic: nRF52840 Datasheet.

# Power Management

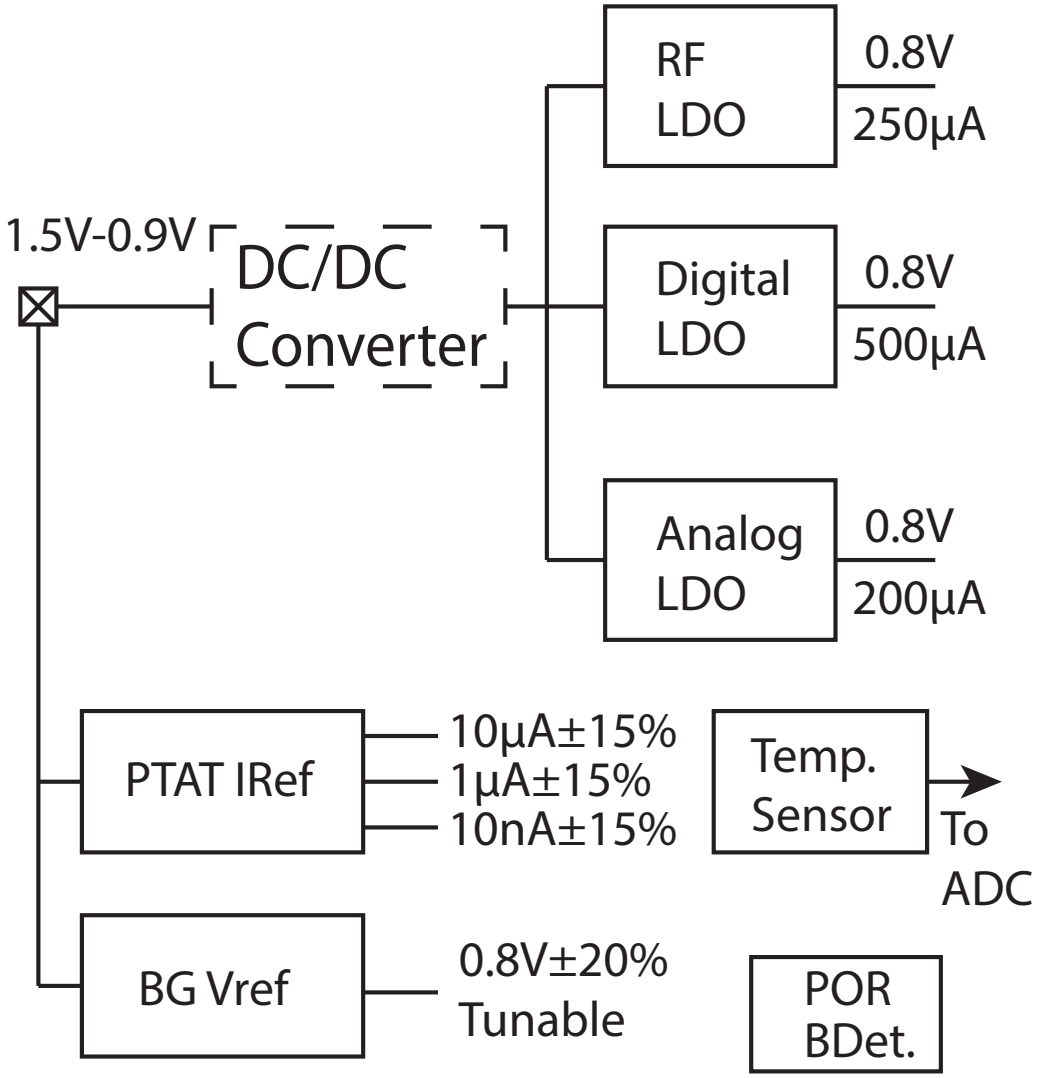

# Reset Signals

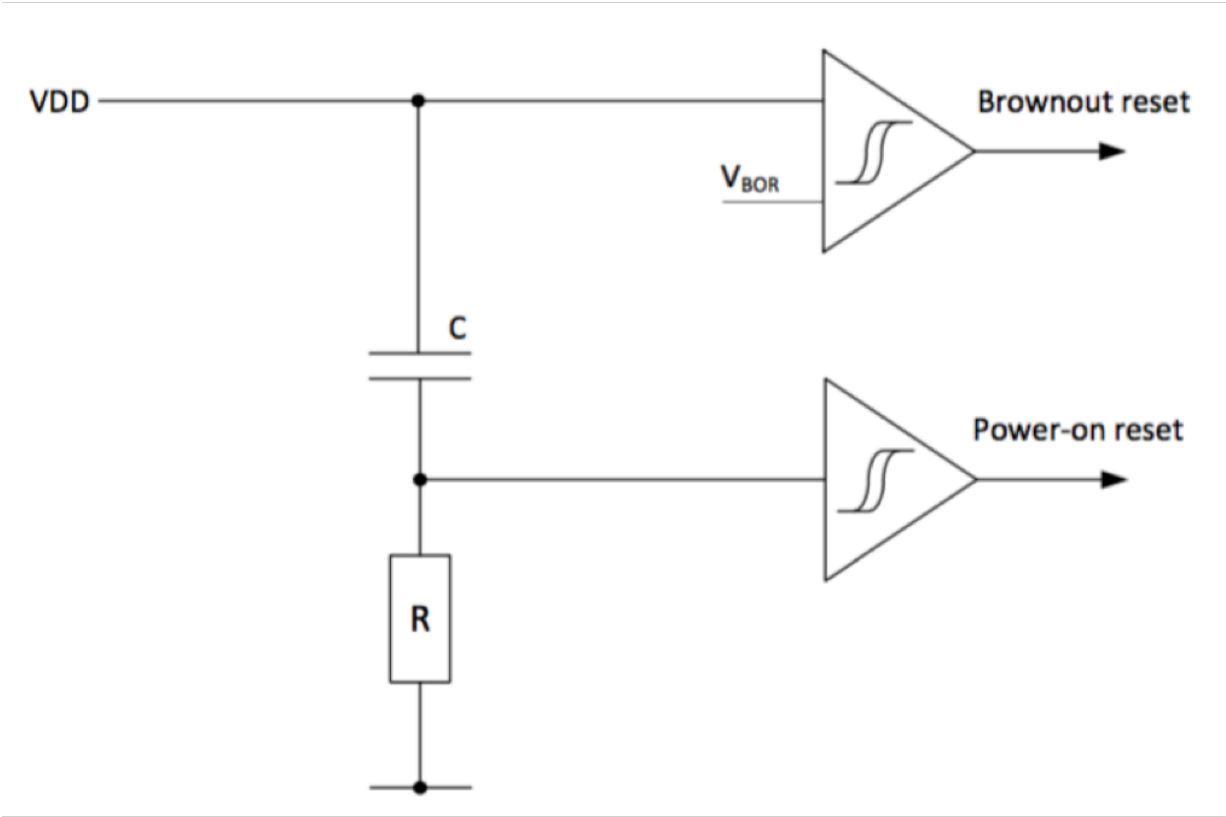


Nordic: nRF52840 Datasheet.

# Rx Signal Flow

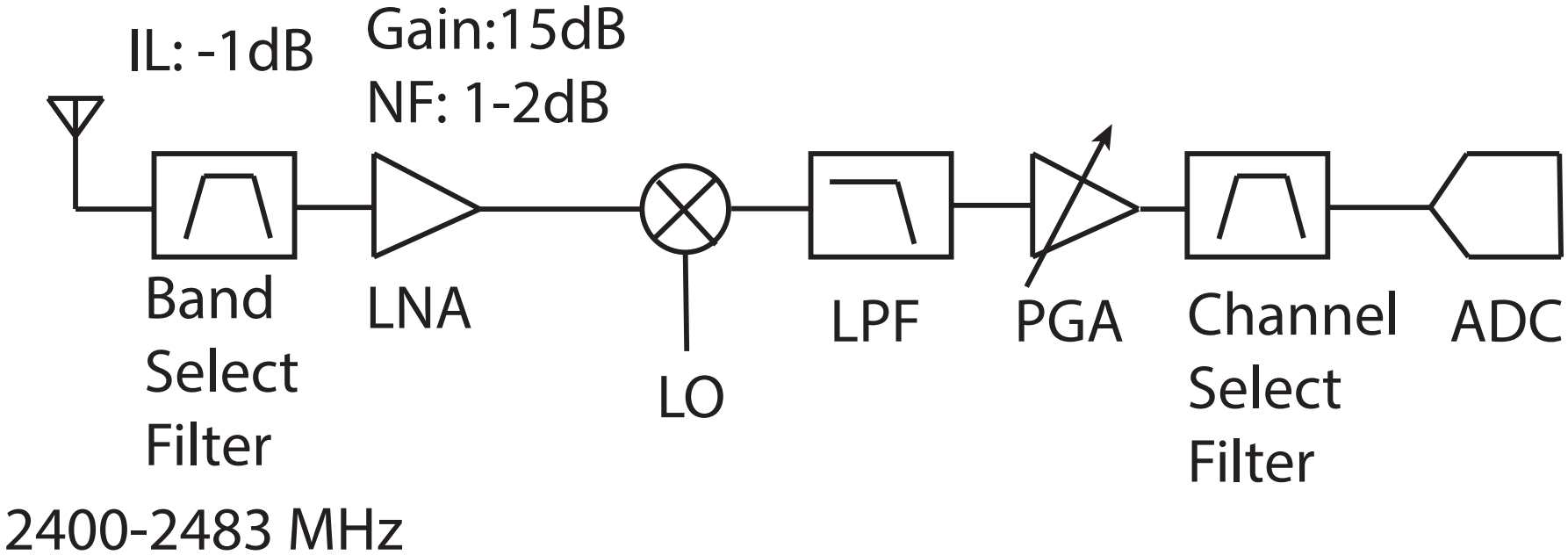


$$F_{total} = F_1 + \frac{F_2 - 1}{G_1} + \frac{F_3 - 1}{G_1 G_2} + \frac{F_4 - 1}{G_1 G_2 G_3} + \ldots$$

# TRx

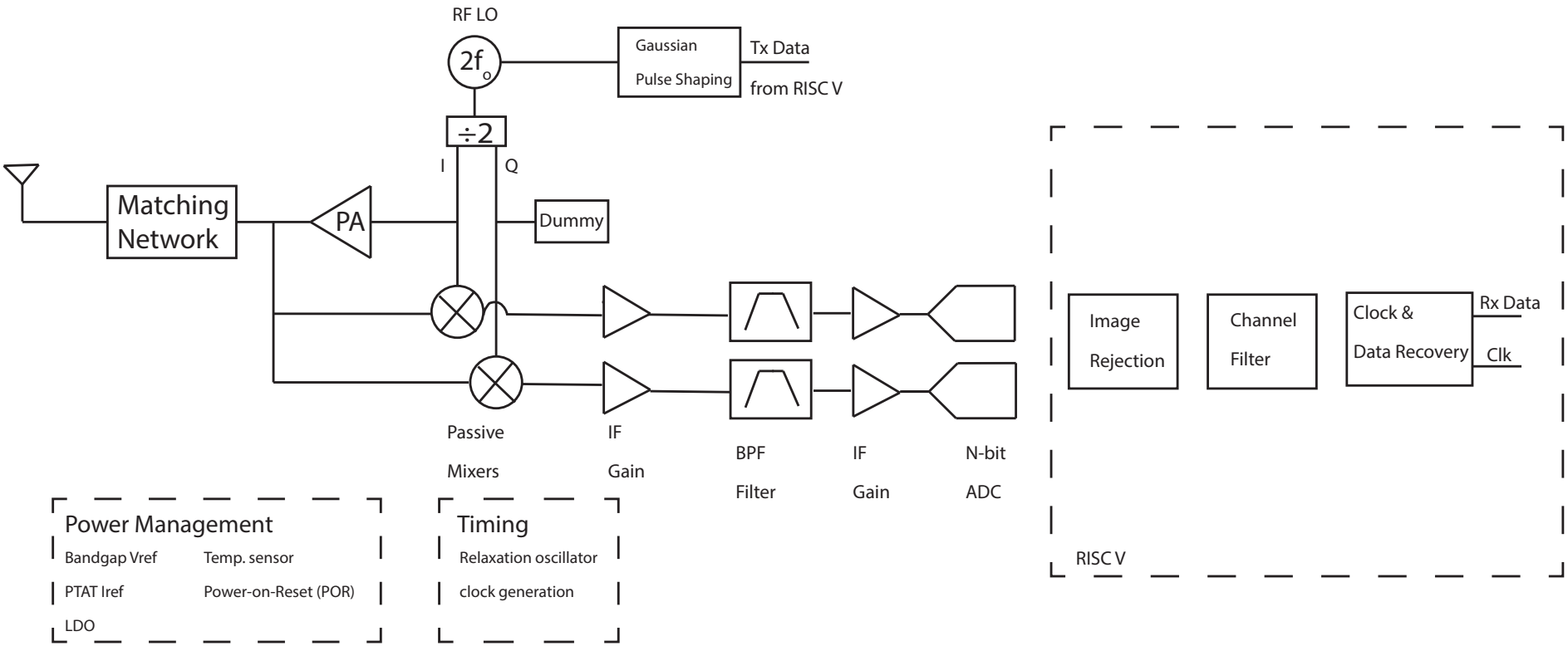
RF LO
2f
o
Gaussian
Pulse Shaping
Tx Data
from RISC V
÷2
I
Q
Matching
Network
PA
Dummy
Passive
Mixers
IF
Gain
BPF
Filter
IF
Gain
N-bit
ADC
Image
Rejection
Channel
Filter
Clock &
Data Recovery
Rx Data
Clk
RISC V
Power Management
Bandgap Vref
Temp. sensor
PTAT Iref
Power-on-Reset (POR)
LDO
Timing
Relaxation oscillator
clock generation