EE194-EE290C

28 nm SoC for IoT

Ref: RF Microelectronics by Behzad Razavi. Second Edition

Terminology

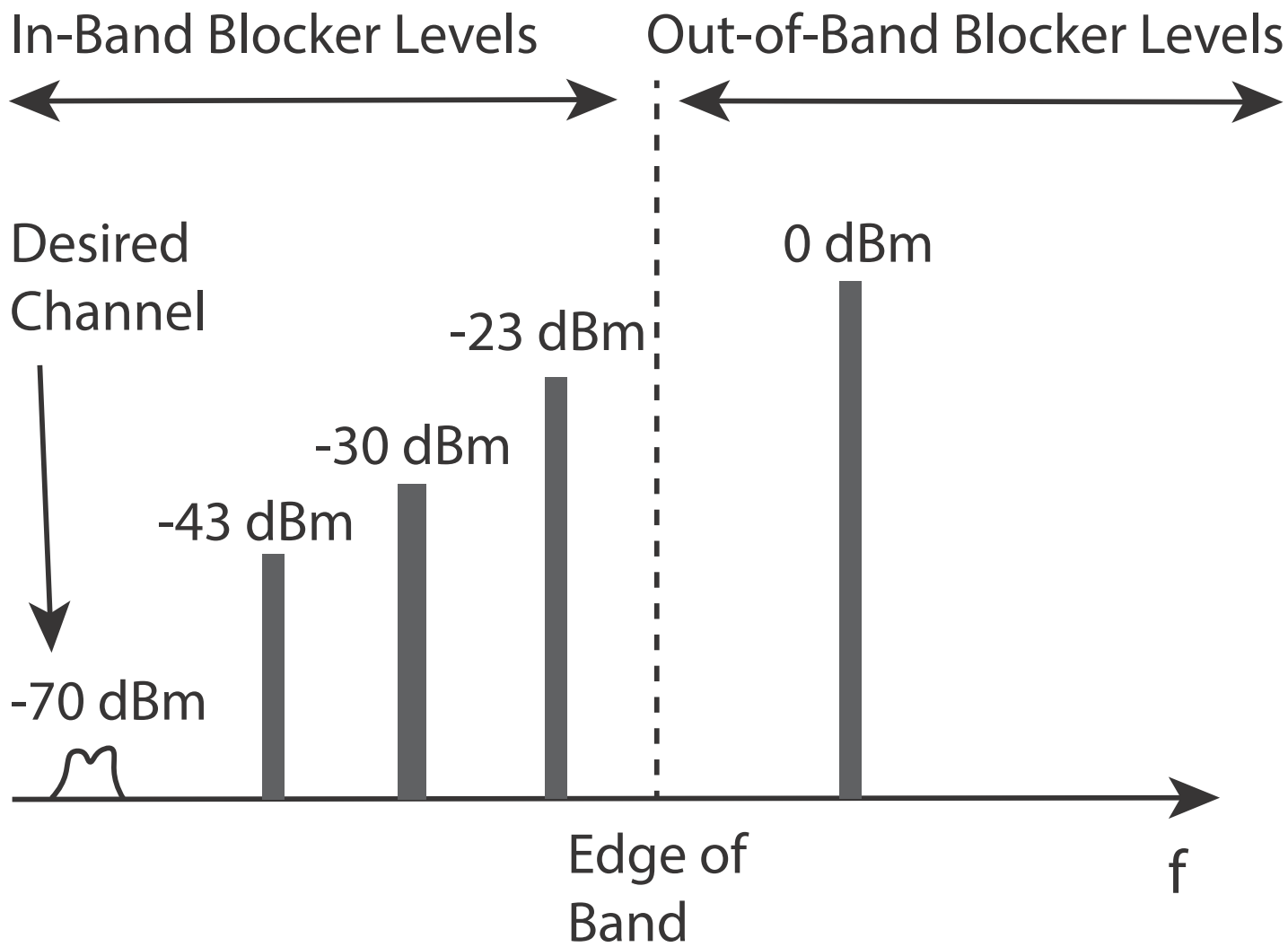

RF Filtering

Filtering requirements impact the RF design of the transceiver.

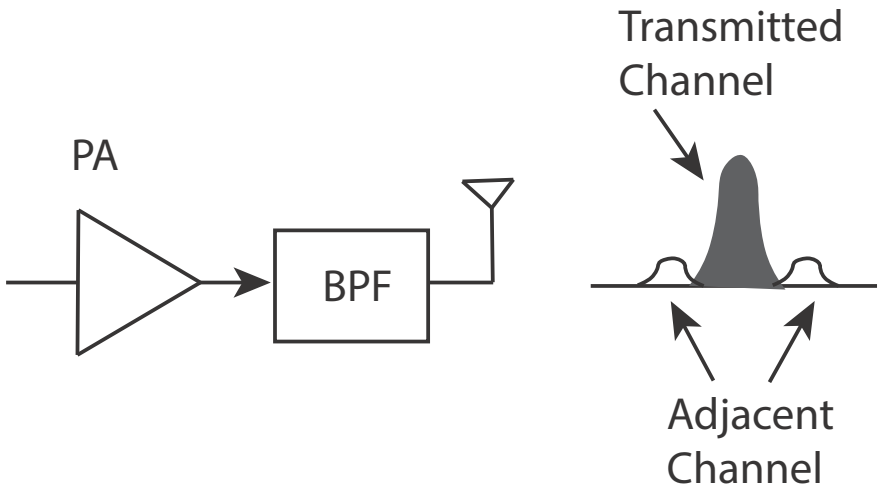

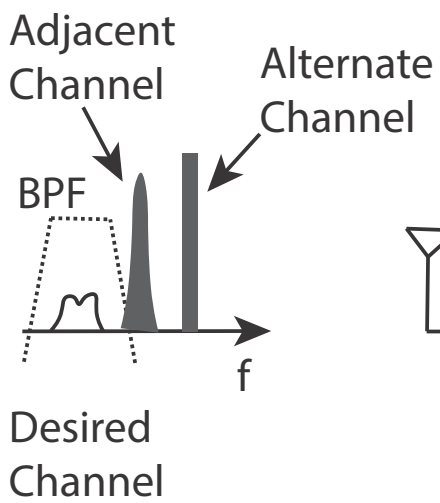

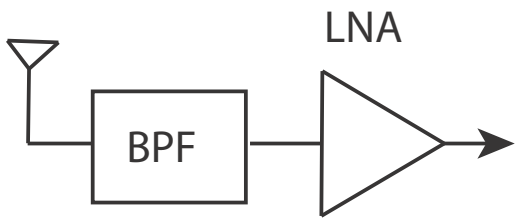

RF Filtering

- Receive chain preceding channel-selection filtering must be sufficiently linear.
- Channel selection filtering is extremely difficult at the RF frequencies.

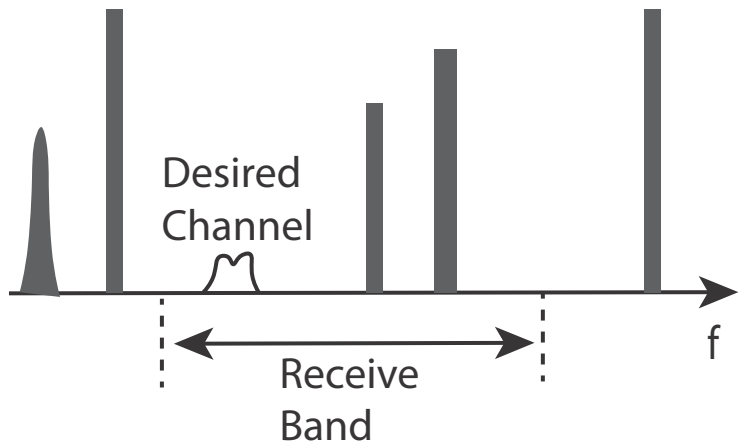

$$Q_{BPF} \approx \frac{f_o}{BW}$$

=2450MHz/1MHz
=2450

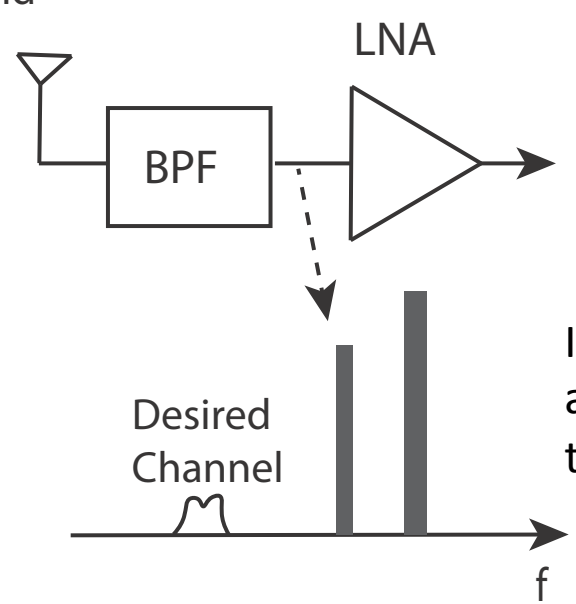

In-Band interferers
are typically removed near
the end of the receive chain.

Rx Architecture

Heterodyne Receiver

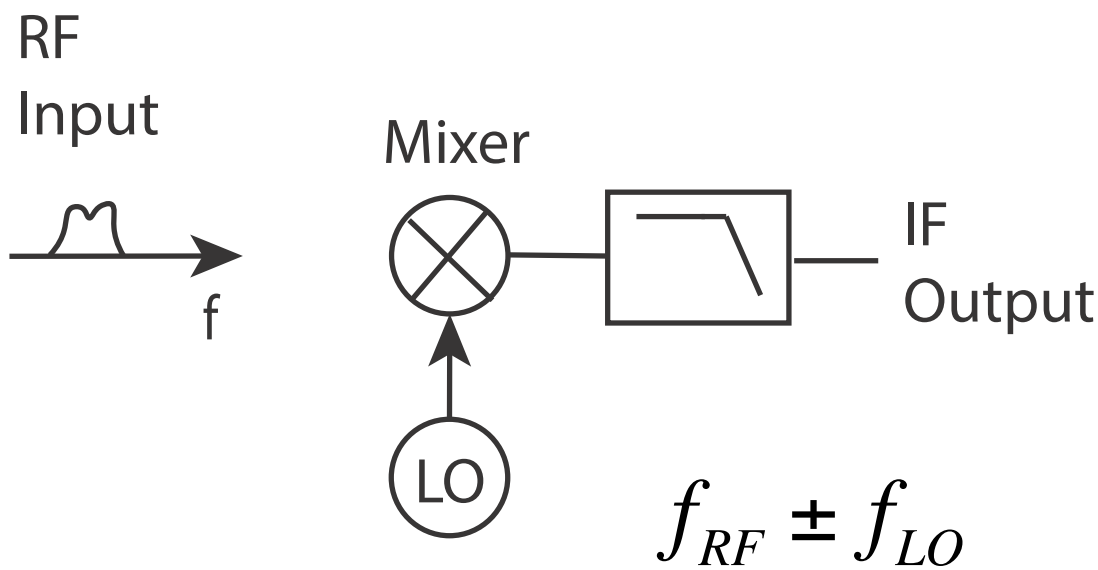

$$A_{RF}\cos\left(2\pi f_{RF}t + \phi_{RF}\right) \ * \ A_{LO}\cos\left(2\pi f_{LO}t + \phi_{LO}\right)$$

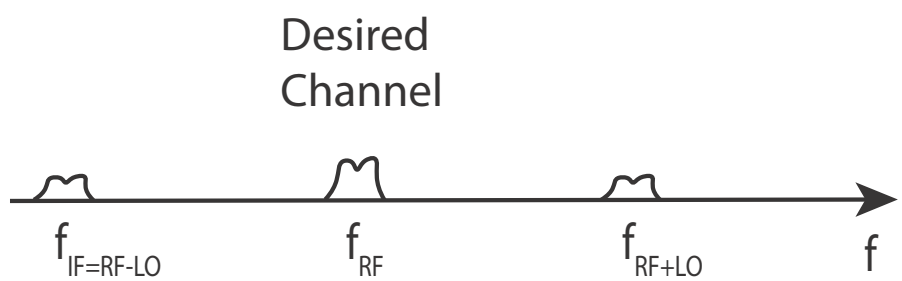

Image Problem

Heterodyne Receivers

$$A_{IF}\cos\left(2\pi f_{IF}t\right) = A_{IF}\cos\left\{2\pi\left(f_{RF} - f_{LO}\right)t\right\}$$

$$A_{IF}\cos\left(2\pi f_{IF}t\right) = A_{IF}\cos\left\{2\pi\left(f_{LO} - f_{RF}\right)t\right\}$$

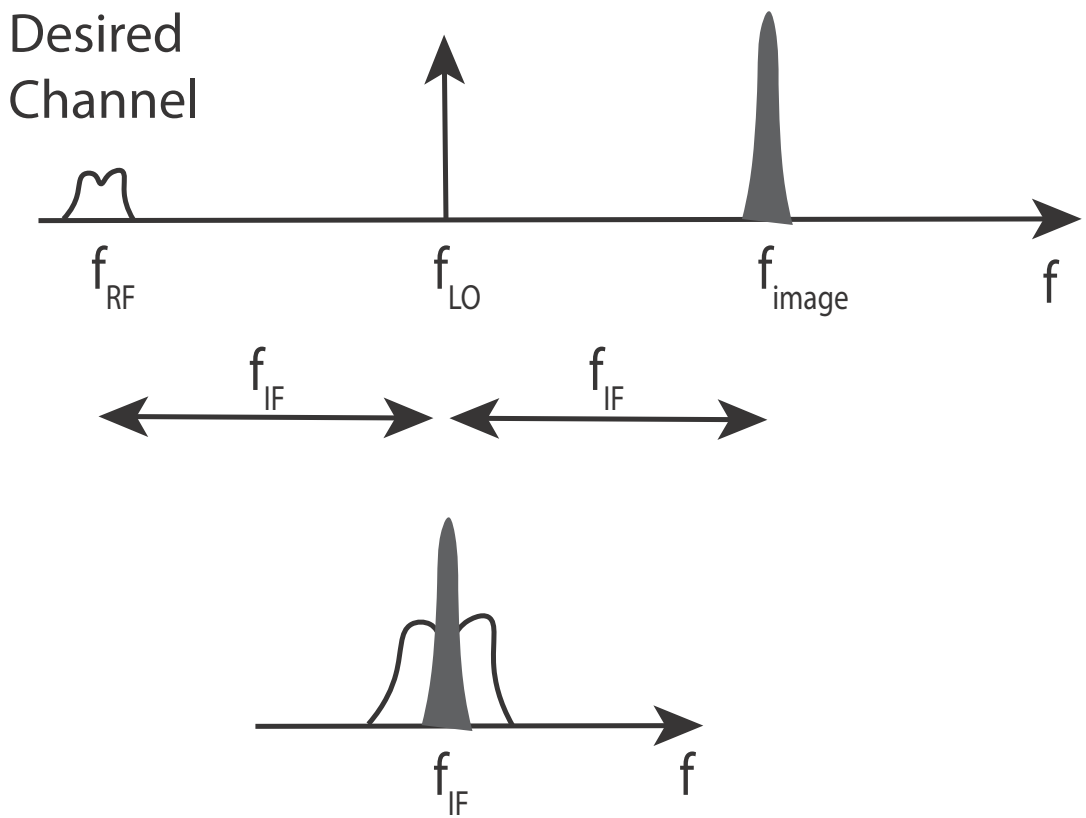

Image Rejection

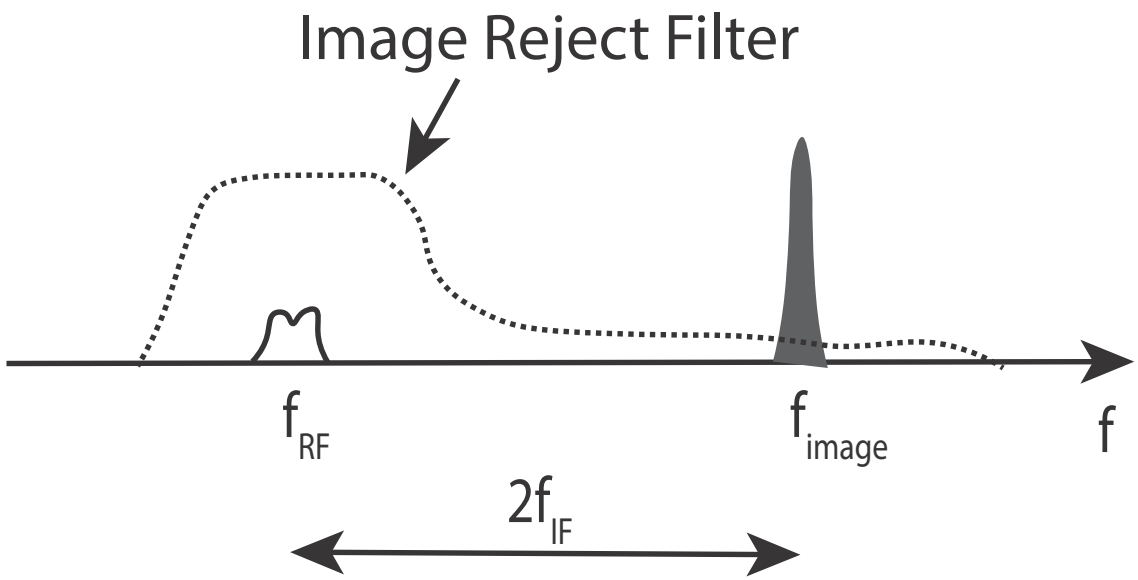

Image Rejection

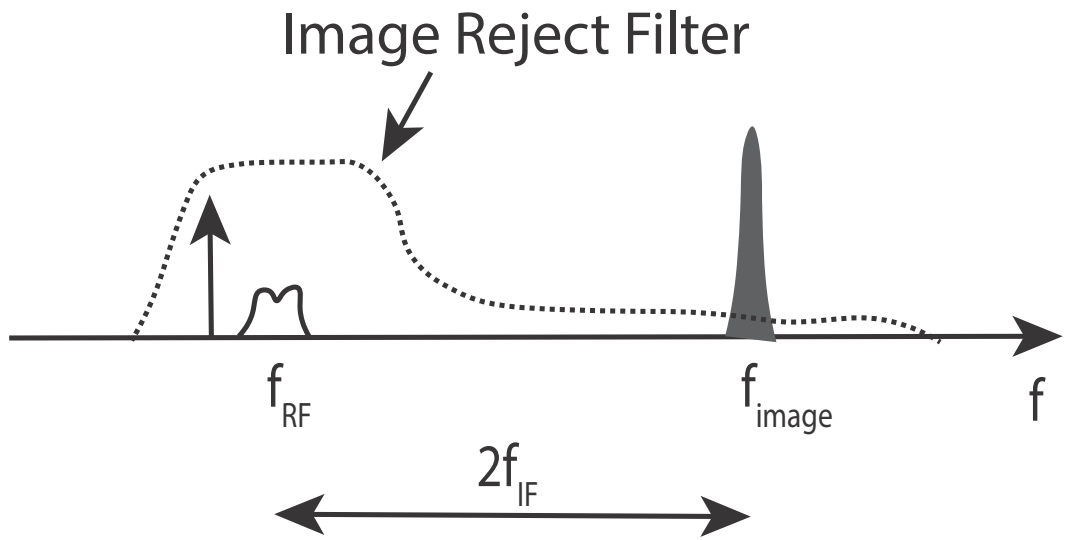

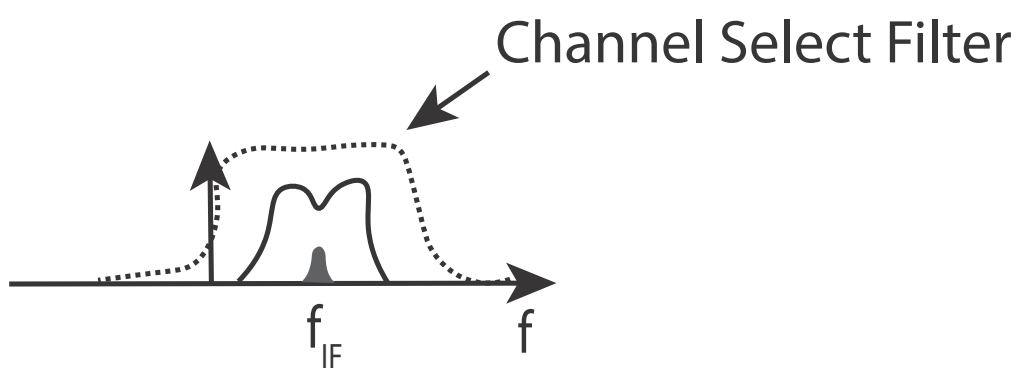

Image Rejection

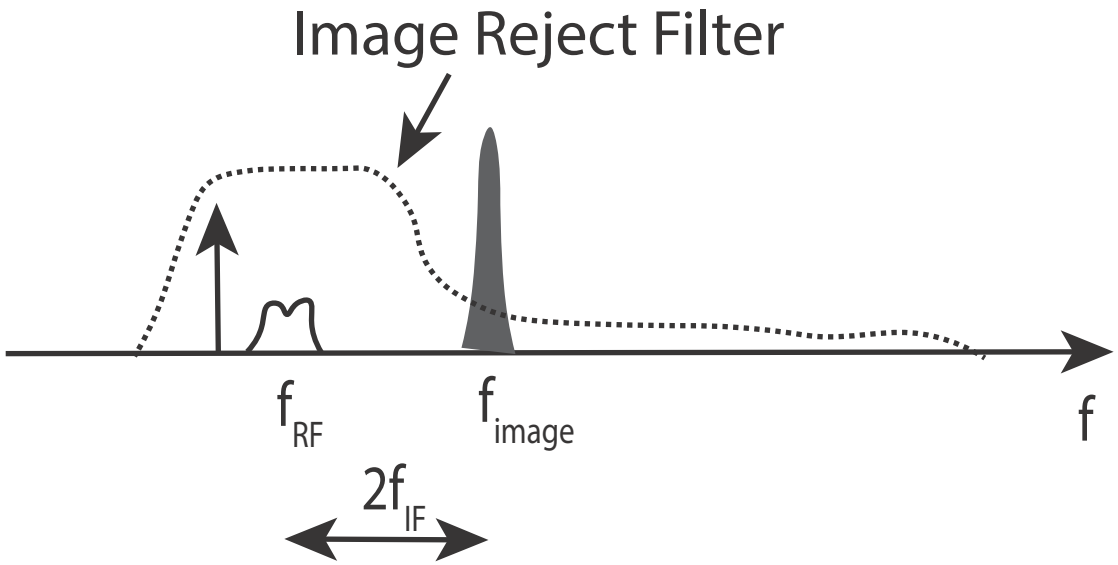

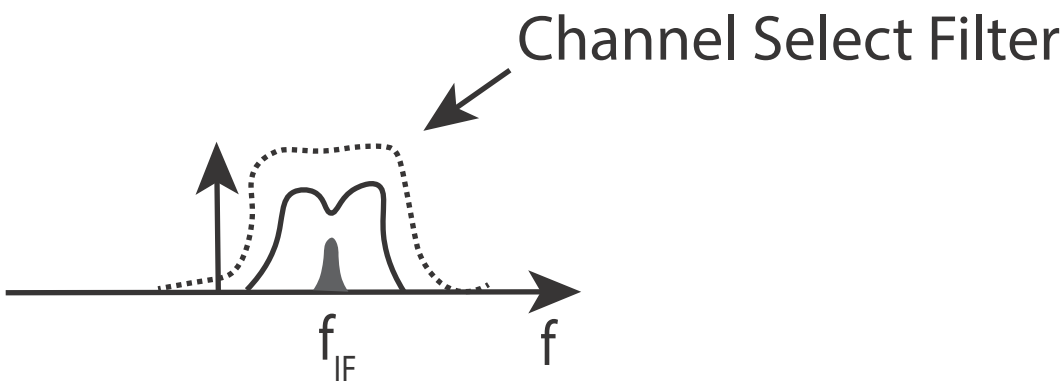

Rx Architecture

Homodyne Receiver

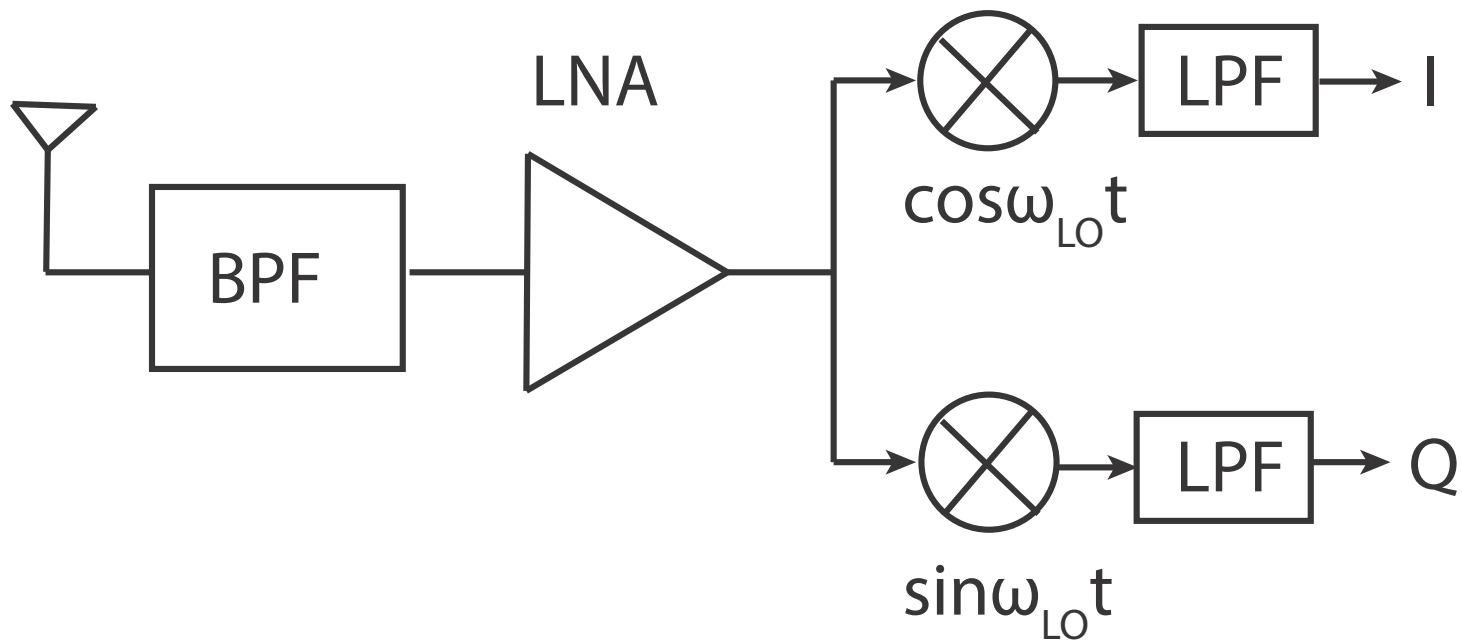

Symmetric vs. Asymmetric Spectra

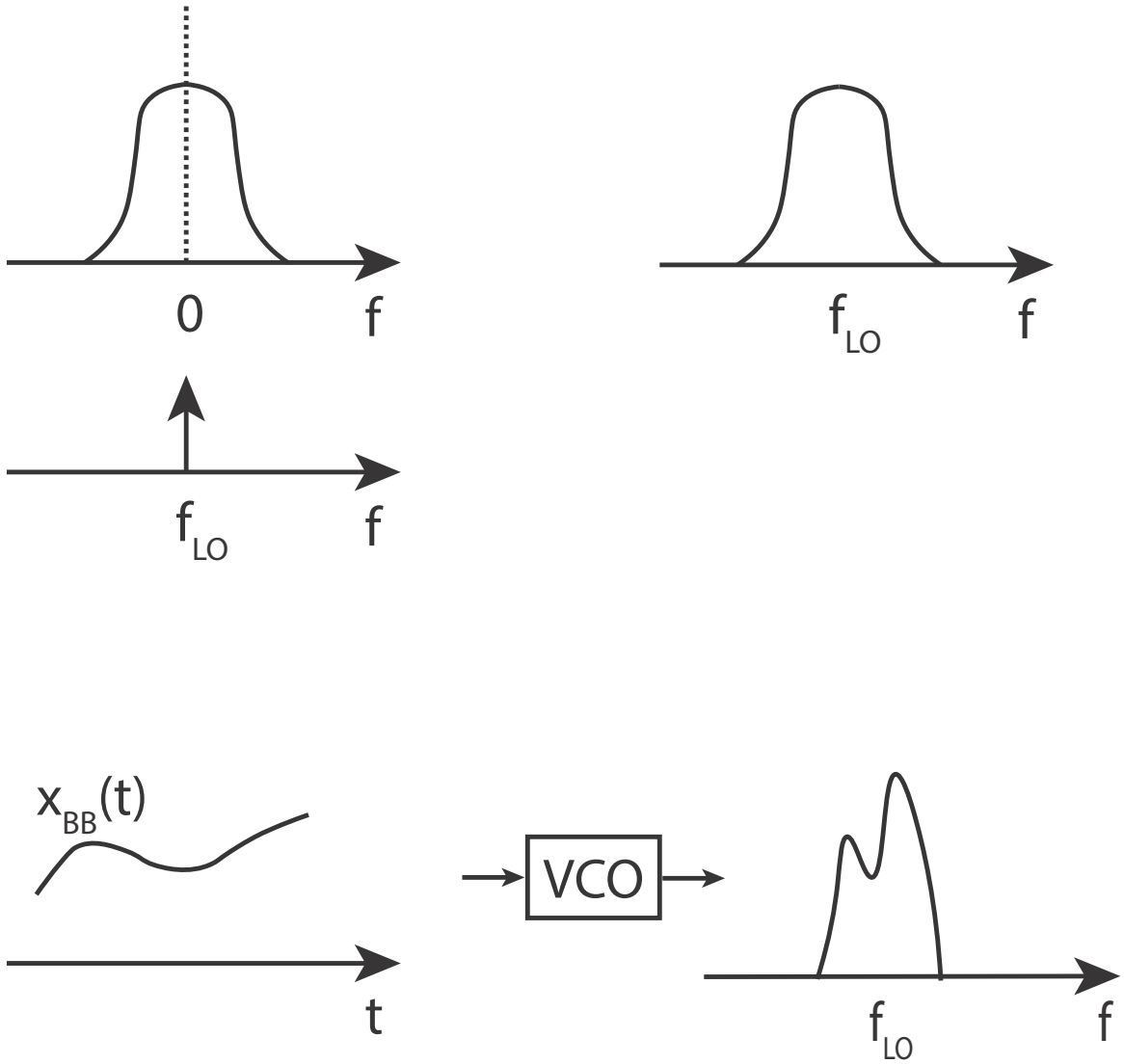

Symmetric vs. Asymmetric Spectra

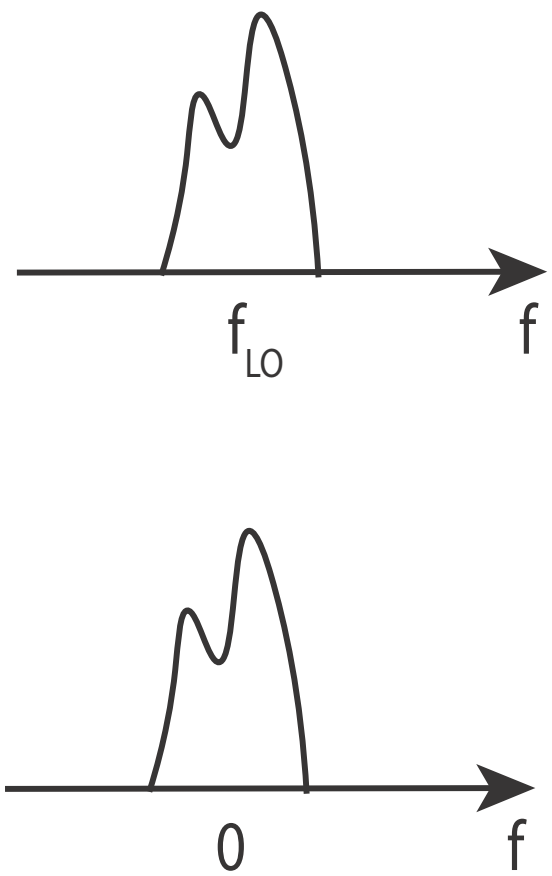

Overlap of signal sidebands after down-conversion

Quadrature Downconversion

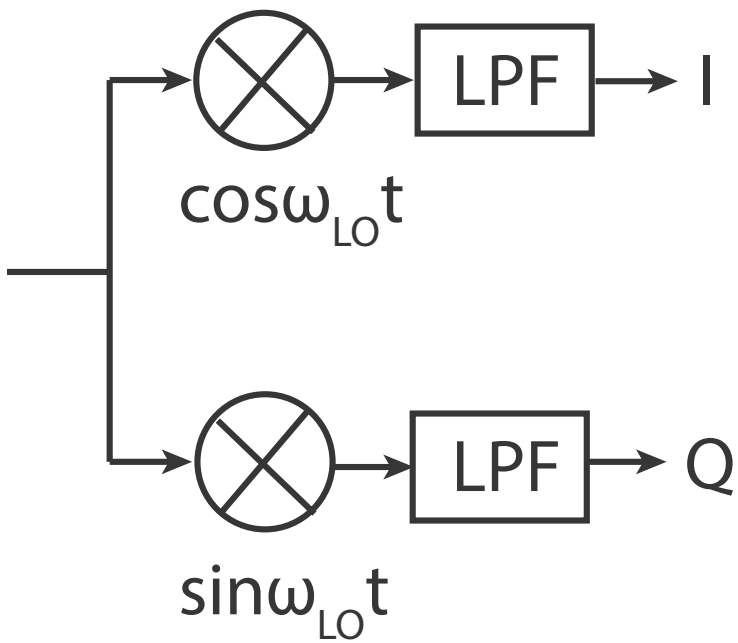

Two versions of the down converted signal that have a phase difference of 90°
Can reconstruct the original information.

Rx Architecture

Direct-conversion receiver (Homodyne)

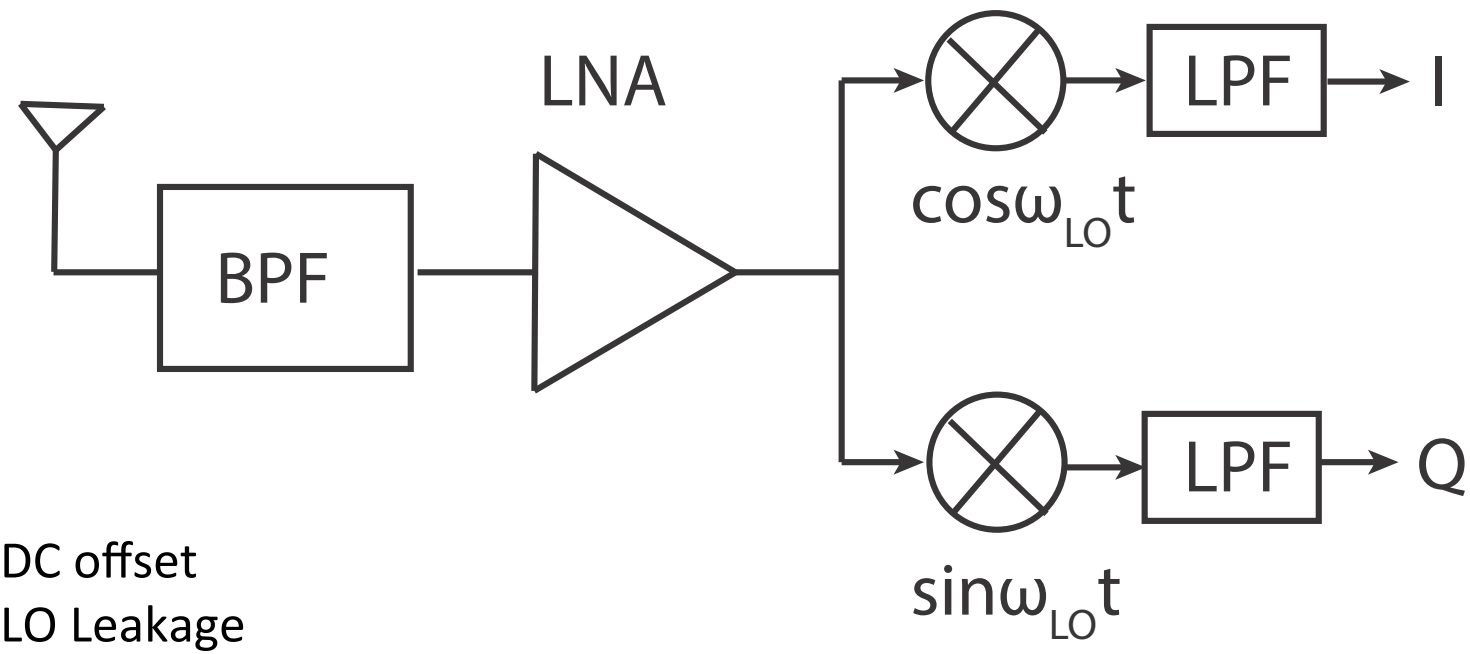

- DC offset
- LO Leakage
- 1/f noise

LO Leakage

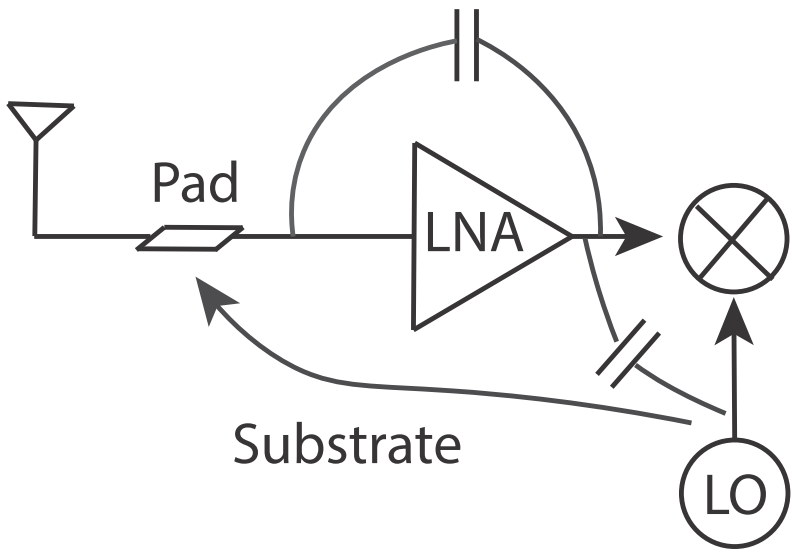

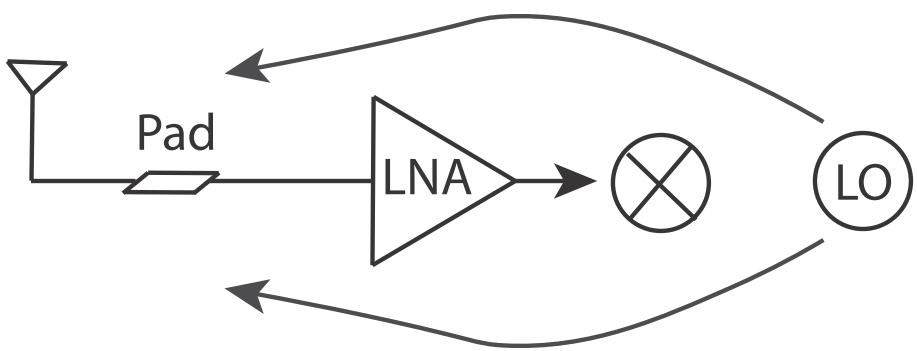

DC Offsets

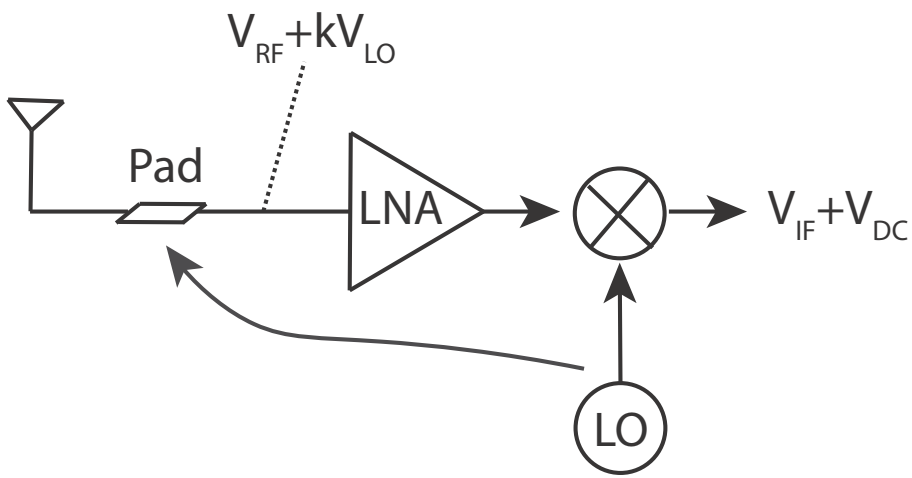
$V_{RF}+kV_{LO}$
Pad
LNA
$V_{IF}+V_{DC}$
LO

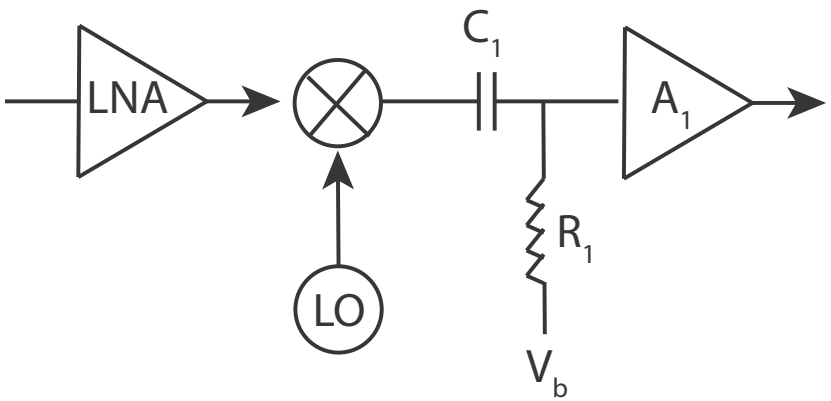
LNA
C_1
A_1
R_1
LO
V_b

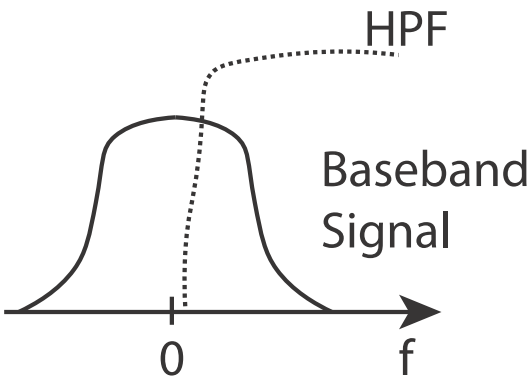
HPF
Baseband
Signal
0
f

DC Offsets

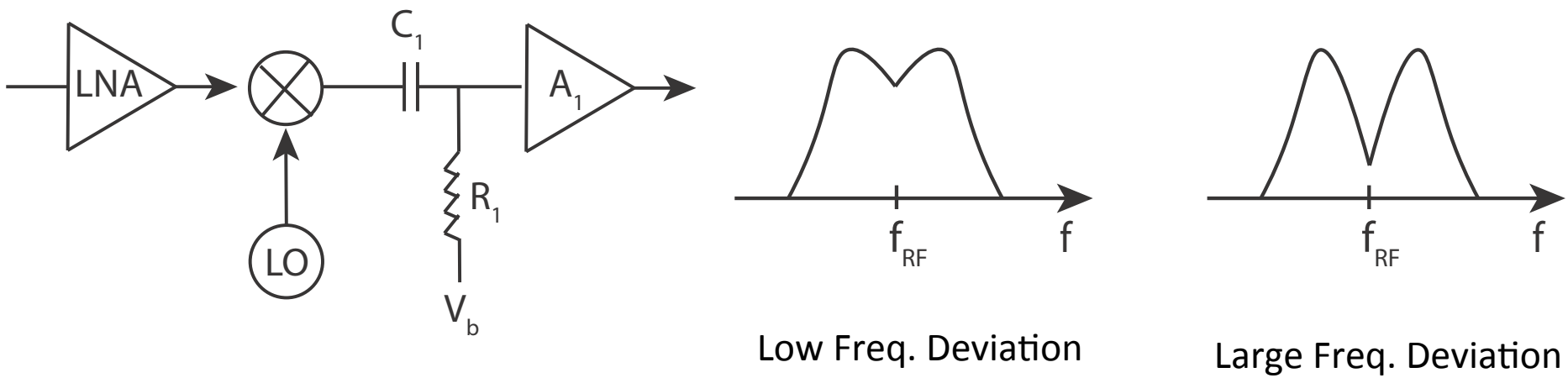

$$f_1 = \frac{1}{2\pi R_1 C_1} < \frac{R_s}{1000}$$

- For 802.11b @ 20 Mb/s, f1=20 KHz
- Slow response to transient inputs.
  - LO frequency is switched to another channel, hence changing the LO leakage.
  - The gain of the LNA is switched, thus changing the reverse isolation of the LNA.

Rx Architecture

Low-IF Receiver

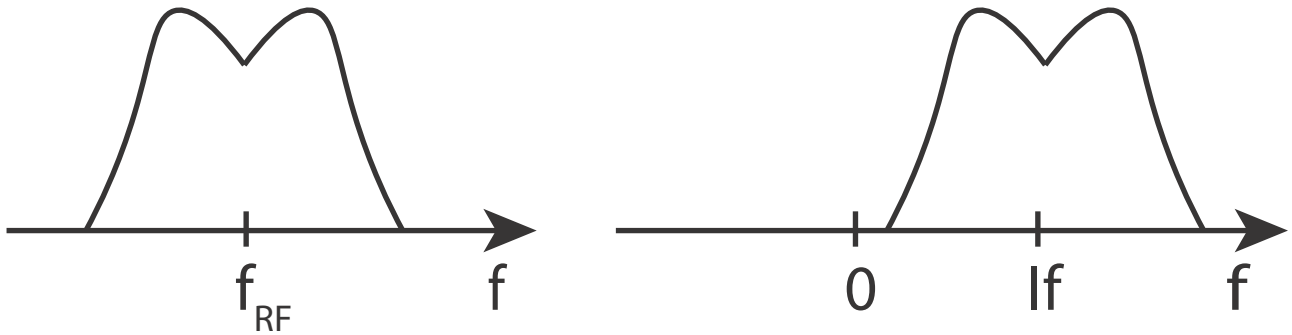

Less 1/f noise penalty
On-chip high-pass filtering becomes feasible.

Rx Architecture

Reject Image without filtering.
Quadrature down conversion as a 90° phase shifter.

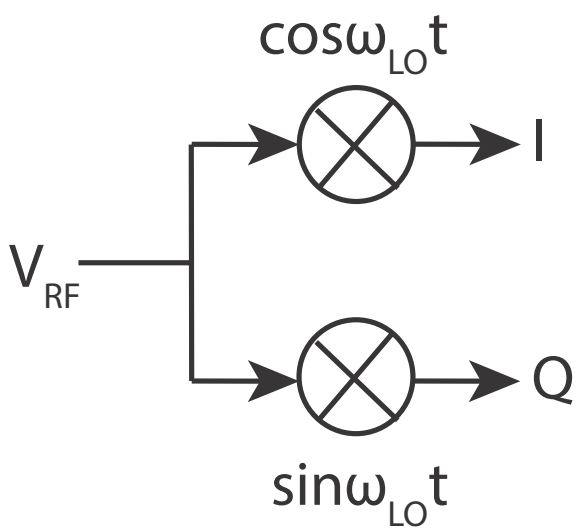

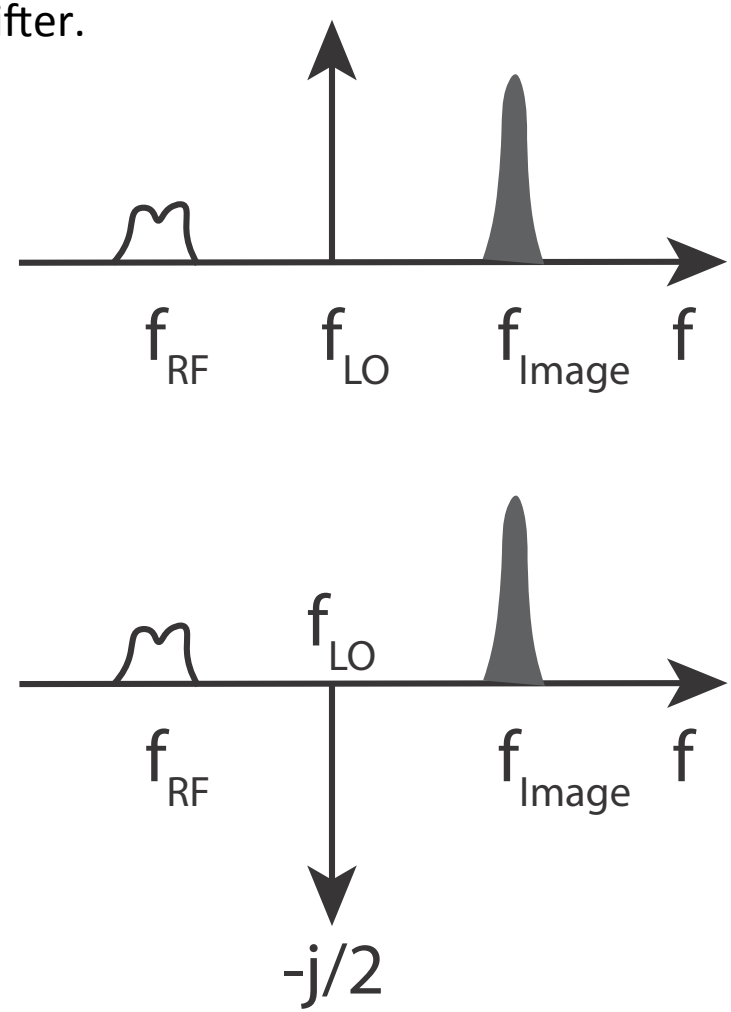

Hartley Architecture

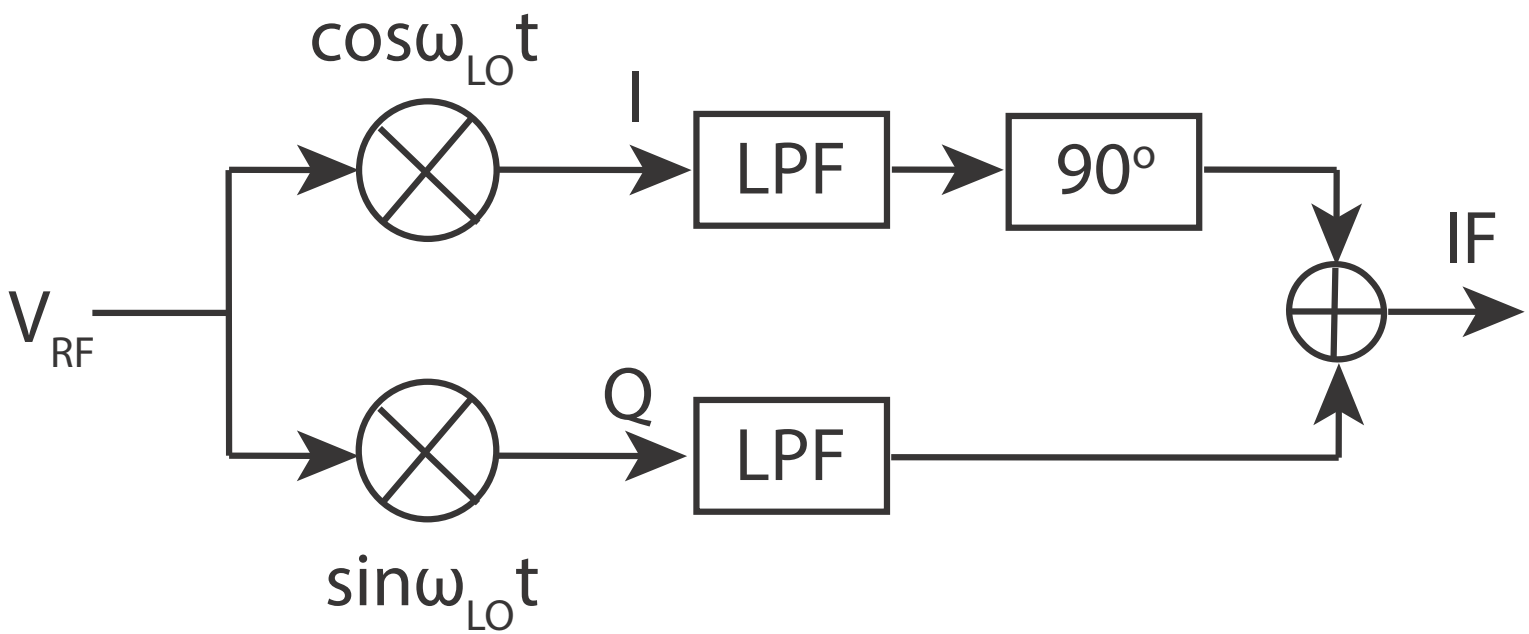

Rx Architecture

$$x(t) = A_{sig}\cos\left(\omega_{sig}t + \phi_{sig}\right) + A_{image}\cos\left(\omega_{image}t + \phi_{image}\right)$$

$$x_I(t) = \frac{A_{sig}}{2}\cos\left[\left(\omega_{sig} - \omega_{LO}\right)t + \phi_{sig}\right] + \frac{A_{image}}{2}\cos\left[\left(\omega_{image} - \omega_{LO}\right)t + \phi_{image}\right]$$

$$x_Q(t) = -\frac{A_{sig}}{2}\sin\left[\left(\omega_{sig} - \omega_{LO}\right)t + \phi_{sig}\right] - \frac{A_{image}}{2}\sin\left[\left(\omega_{image} - \omega_{LO}\right)t + \phi_{image}\right]$$

$$x(t) = \frac{A_{image}}{2}\sin\left[\left(\omega_{LO} - \omega_{image}\right)t - \phi_{image}\right]$$

Rx Architecture

$$x(t) = -\frac{A_{image}}{2}\cos\left[\left(\omega_{LO} - \omega_{image}\right)t - \phi_{image}\right]$$

$$x_{90}(t) = -\frac{A_{image}}{2}\cos\left[\left(\omega_{image} - \omega_{LO}\right)t + \phi_{image}\right]$$

Rx Architecture